TECHNICAL DATA
&
SERVICE MANUAL

Euro-Line®

NEW OZONE ERA, KEEP THE GREEN WORLD
R407C

AS 425 C / AER 525 SCE
AS 425 C / AER 525 SC3E
AS 425 C / AER 525 SCL3E
AS 436 C / AER 536 SC3E
AS 436 C / AER 536 SCL3E
AS 448 C / AER 548 SC3E
AS 448 C / AER 548 SCL3E

AC 425 C / AER 525 SCE
AC 425 C / AER 525 SC3E
AC 425 C / AER 525 SCL3E
AC 436 C / AER 536 SC3E
AC 436 C / AER 536 SCL3E
AC 448 C / AER 548 SC3E
AC 448 C / AER 548 SCL3E

AD 425 CW / AER 525 SCE
AD 425 CW / AER 525 SC3E
AD 425 CW / AER 525 SCL3E
AD 436 CW / AER 536 SC3E
AD 436 CW / AER 536 SCL3E
AD 448 CW / AER 548 SC3E
AD 448 CW / AER 548 SCL3E

SPLIT SYSTEM AIR CONDITIONER

Section
1
2
3
4

Indoor Unit

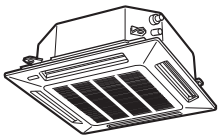

AS 425 C

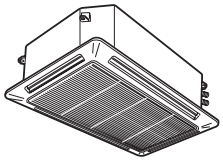

AS 436 C
AS 448 C

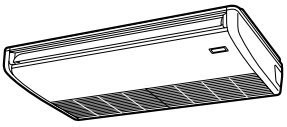

AC 425 C
AC 436 C
AC 448 C

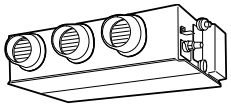

AD 425 CW

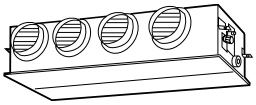

AD 436 CW
AD 448 CW

Outdoor Unit

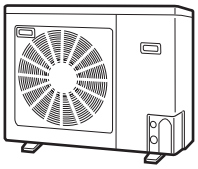

AER 525 SCE - AER 525 SC3E
AER 525 SCL3E

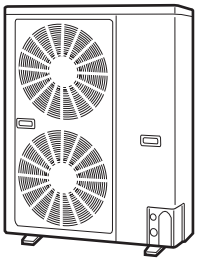

AER 536 SC3E - AER 548 SC3E
AER 536 SCL3E - AER 548 SCL3E

0.8180.229.0 07/02

Important

Please Read Before Starting

This air conditioning system meets strict safety and operating standards. As the installer or service person, it is an important part of your job to install or service the system so it operates safely and efficiently.

For safe installation and trouble-free operation, you must :

- Carefully read this instruction booklet before beginning.
- Follow each installation or repair step exactly as shown.
- Observe all local, state, and national electrical codes.
- Pay close attention to all warning and caution notices given in this manual.

WARNING This symbol refers to a hazard or unsafe practice which can result in severe personal injury or death.

CAUTION This symbol refers to a hazard or unsafe practice which can result in personal injury or product or property damage.

If Necessary, Get Help

These instructions are all you need for most installation sites and maintenance conditions. If you require help for a special problem, contact our sales/service outlet or your certified dealer for additional instructions.

In Case of Improper Installation

The manufacturer shall in no way be responsible for improper installation or maintenance service, including failure to follow the instructions in this document.

SPECIAL PRECAUTIONS

When Wiring

ELECTRICAL SHOCK CAN CAUSE SEVERE PERSONAL INJURY OR DEATH. ONLY A QUALIFIED, EXPERIENCED ELECTRICIAN SHOULD ATTEMPT TO WIRE THIS SYSTEM.

- Do not supply power to the unit until all wiring and tubing are completed or reconnected and checked.
- Highly dangerous electrical voltages are used in this system. Carefully refer to the wiring diagram and these instructions when wiring. Improper connections and inadequate grounding can cause **accidental injury or death**.
- **Ground the unit** following local electrical codes.
- Connect all wiring tightly. Loose wiring may cause overheating at connection points and a possible fire hazard.

When Transporting

Be careful when picking up and moving the indoor and outdoor units. Get a partner to help, and bend your knees when lifting to reduce strain on your back. Sharp edges or thin aluminum fins on the air conditioner can cut your fingers.

When Installing

…In a Room
Properly insulate any tubing run inside a room to prevent “sweating” that can cause dripping and water damage to walls and floors.

…In Moist or Uneven Locations
Use a raised concrete pad or concrete blocks to provide a solid, level foundation for the outdoor unit. This prevents water damage and abnormal vibration.

…In an area with High Winds
Securely anchor the outdoor unit down with bolts and a metal frame. Provide a suitable air baffle.

…In a Snowy Area (for Heat Pump-type Systems)
Install the outdoor unit on a raised platform that is higher than drifting snow. Provide snow vents.

When Connecting Refrigerant Tubing

- Ventilate the room well, in the event that refrigerant gas leaks during the installation. Be careful not to allow contact of the refrigerant gas with a flame as this will cause the generation of poisonous gas.
- Keep all tubing runs as short as possible.
- Use the flare method for connecting tubing.
- Apply refrigerant lubricant to the matching surfaces of the flare and union tubes before connecting them, then tighten the nut with a torque wrench for a leak-free connection.
- Check carefully for leaks before starting the test run.

NOTE
Depending on the system type, liquid and gas lines may be either narrow or wide. Therefore, to avoid confusion the refrigerant tubing for your particular model is specified as either “narrow” or “wide” rather than as “liquid” or “gas”.

When Servicing

- Turn the power OFF at the main power box (mains) before opening the unit to check or repair electrical parts and wiring.
- Keep your fingers and clothing away from any moving parts.
- Clean up the site when installation is finished. Check that no metal scraps or bits of wiring have been left inside the unit.

CAUTION

- Ventilate any enclosed areas when installing or testing the refrigeration system. Contact of refrigerant gas with fire or heat can produce poisonous gas.
- Confirm after installation that no refrigerant gas is leaking. If the gas comes in contact with a burning stove, gas water heater, electric room heater or other heat source, it can cause the generation of poisonous gas.

1. SPECIFICATIONS

1-1 Unit Specifications ..... I - 2
4-Way Air Discharge Semi-concealed Type ..... I - 2
Ceiling Mounted Type ..... I - 9
Concealed Duct Type ..... I - 16

1-2 Major Component Specifications ..... I - 30
(A) Indoor Units ..... I - 30
(B) Outdoor Units ..... I - 41
1-3 Other Component Specifications ..... I - 46
4-Way Air Discharge Semi-concealed Type ..... I - 46
Ceiling Mounted Type ..... I - 47
Concealed Duct Type ..... I - 48

Outdoor Units ..... I - 50
1-4 Dimensional Data ..... I - 52
(A) Indoor Units ..... I - 52
4-Way Air Discharge Semi-concealed Type ..... I - 53
Ceiling Mounted Type ..... I - 54
Concealed Duct Type ..... I - 55

(B) Outdoor Units ..... I - 59
1-5 Refrigerant Flow Diagram ..... I - 61
1-6 Operating Range ..... I - 63
1-7 Cooling Capacity ..... I - 64
1-8 Noise Criterion Curves ..... I - 82
1-9 Indoor Fan Performance ..... I - 87
1-10 Air throw Distance Chart ..... I - 89
1-11 Installation Instructions ..... I - 91
Tubing Length ..... I - 91
Selecting the Installation Site ..... I - 92
Electrical Wiring ..... I - 95
Electrical Characteristics ..... I - 97

1-1 Unit Specifications

4-Way Air Discharge Semi-concealed Type

MODEL No.	Indoor Unit		AS425C		
	Outdoor Unit		AER525SCE		
POWER SOURCE			220 - 230 - 240 V / 1 phase / 50 Hz		
PERFORMANCE			Cooling		
Capacity		kW	7.3		
		BTU / h	25,000		
Air circulation (Hi / Me / Lo)		m^3/h	1,140 / 1,020 / 840		
Moisture removal (High)		Liters/h	3.6		
ELECTRICAL RATINGS					
Voltage rating		V	220	230	240
Available voltage range		V	198 – 264		
Running amperes*		A	13.3	13.5	13.6
Max. running amperes**		A	14.7	14.7	14.8
Power input		kW	2.75	2.87	2.94
Power factor		%	94	93	90
C.O.P		W / W	2.65	2.54	2.48
Max. starting amperes		A	69	72	75
FEATURES					
Controls / Thermostat control			Microprocessor		
Timer			ON / OFF 12-hours	ON/OFF 24-hours & Program	
Fan speeds Indoor / Outdoor			3 and Automatic control / 2 (Auto)		
Airflow direction (Indoor)			Automatic (Remote control)		
Air filter			Washable, easy access, long life (2,500 hr)		
Remote controller (Option)			Wired : RCS-31G(W)	Wireless : RCS-5PS3E	
Refrigerant control			Capillary tube		
Drain pump (Drain connection)			Max. head 25 cm above drain connection (25A, OD32 mm)		
Compressor			Rotary (Sanyo)		
Operation sound	Indoor - Hi/Me/Lo	dB - A	37 / 35 / 31		
	Outdoor - Hi	dB - A	52		
Color (Approximate value)	Indoor		Munsell 10Y9.3 / 0.4, RAL 9010-GL		
	Outdoor		Munsell 6.96Y8.13 / 0.2, RAL 7035-GL		
REFRIGERANT TUBING					
Limit of tubing length		m (ft.)	40 (131)		
Limit of tubing length at shipment		m (ft.)	15 (49)		
Limit of elevation difference between the two units		m (ft.)	Outdoor unit is higher than indoor unit : 40 (131) Outdoor unit is lower than indoor unit : 30 (98)		
Refrigerant tube outer diameter	Narrow tube	mm (in.)	6.35 (1 / 4)		
	Wide tube	mm (in.)	15.88 (5 / 8)		
Refrigerant amount at shipment		kg	R407C - 2.4		
DIMENSIONS & WEIGHT			Indoor unit (Include panel)		Outdoor unit
Unit dimensions	Height	mm (in.)	328 (12 - 29 / 32)		735 (28 - 30 / 32)
	Width	mm (in.)	860 (33 - 27 / 32)		940 (37)
	Depth	mm (in.)	860 (33 - 27 / 32)		340 (13 - 12 / 32)
Package dimensions			Body	Panel	Outdoor unit
	Height mm (in.)		284 (11 - 6 / 32)	104 (4 - 3 / 32)	826 (32 - 17 / 32)
	Width mm (in.)		824 (32 - 14 / 32)	967 (38 - 2 / 32)	1,016 (40)
	Depth mm (in.)		833 (32 - 25 / 32)	999 (39 - 11 / 32)	416 (16 - 12 / 32)
Net weight		kg (lb.)	30 (66)		67 (148)
Shipping weight		kg (lb.)	27 (60)	8 (18)	73 (161)
Shipping volume		m^3 (cu. ft)	0.195 (6.9)	0.1 (3.5)	0.349 (12.3)

DATA SUBJECT TO CHANGE WITHOUT NOTICE.

Cooling:
Rating conditions (*): Indoor air temperature 27 °C DB / 19 °C WB, Outdoor air temperature 35 °C DB
Full load conditions (**): Indoor air temperature 32 °C DB / 23 °C WB, Outdoor air temperature 43 °C DB

MODEL No.	Indoor Unit		AS 425C		
	Outdoor Unit		AER525SC3E		
POWER SOURCE			380 - 400 - 415 V / 3N / 50 Hz		
PERFORMANCE			Cooling		
Capacity		kW	7.3		
		BTU / h	25,000		
Air circulation (Hi / Me / Lo)		m^3/h	1,140 / 1,020 / 840		
Moisture removal (High)		Liters/h	3.6		
ELECTRICAL RATINGS					
Voltage rating		V	380	400	415
Available voltage range		V	342 – 456		
Running amperes*		A	4.82	4.78	4.73
Max. running amperes**		A	5.67	5.68	5.69
Power input		kW	2.76	2.79	2.82
Power factor		%	87	84	83
C.O.P		W / W	2.64	2.62	2.59
Max. starting amperes		A	27	29	30
FEATURES					
Controls / Thermostat control			Microprocessor		
Timer			ON / OFF 12-hours	ON/OFF 24-hours & Program	
Fan speeds Indoor / Outdoor			3 and Automatic control / 2 (Auto)		
Airflow direction (Indoor)			Automatic (Remote control)		
Air filter			Washable, easy access, long life (2,500 hr)		
Remote controller (Option)			Wired : RCS-31G(W)	Wireless : RCS-5PS3E	
Refrigerant control			Capillary tube		
Drain pump (Drain connection)			Max. head 25 cm above drain connection (25A, OD32 mm)		
Compressor			Rotary (Sanyo)		
Operation sound	Indoor - Hi/Me/Lo	dB - A	37 / 35 / 31		
	Outdoor - Hi	dB - A	52		
Color (Approximate value)	Indoor		Munsell 10Y9.3 / 0.4, RAL 9010-GL		
	Outdoor		Munsell 6.96Y8.13 / 0.2, RAL 7035-GL		
REFRIGERANT TUBING					
Limit of tubing length		m (ft.)	40 (131)		
Limit of tubing length at shipment		m (ft.)	15 (49)		
Limit of elevation difference between the two units		m (ft.)	Outdoor unit is higher than indoor unit : 40 (131) Outdoor unit is lower than indoor unit : 30 (98)		
Refrigerant tube outer diameter	Narrow tube	mm (in.)	6.35 (1 / 4)		
	Wide tube	mm (in.)	15.88 (5 / 8)		
Refrigerant amount at shipment		kg	R407C - 2.4		
DIMENSIONS & WEIGHT			Indoor unit (Include panel)		Outdoor unit
Unit dimensions	Height	mm (in.)	328 (12 - 29 / 32)		735 (28 - 30 / 32)
	Width	mm (in.)	860 (33 - 27 / 32)		940 (37)
	Depth	mm (in.)	860 (33 - 27 / 32)		340 (13 - 12 / 32)
Package dimensions			Body	Panel	Outdoor unit
	Height mm (in.)		284 (11 - 6 / 32)	104 (4 - 3 / 32)	826 (32 - 17 / 32)
	Width mm (in.)		824 (32 - 14 / 32)	967 (38 - 2 / 32)	1,016 (40)
	Depth mm (in.)		833 (32 - 25 / 32)	999 (39 - 11 / 32)	416 (16 - 12 / 32)
Net weight		kg (lb.)	30 (66)		67 (148)
Shipping weight		kg (lb.)	27 (60)	8 (18)	73 (161)
Shipping volume		m^3 (cu. ft)	0.195 (6.9)	0.1 (3.5)	0.349 (12.3)

DATA SUBJECT TO CHANGE WITHOUT NOTICE.

Cooling:
Rating conditions (*): Indoor air temperature 27 °C DB / 19 °C WB, Outdoor air temperature 35 °C DB
Full load conditions (**): Indoor air temperature 32 °C DB / 23 °C WB, Outdoor air temperature 43 °C DB

MODEL No.	Indoor Unit		AS425C		
	Outdoor Unit		AER525SCL3E		
POWER SOURCE			380 - 400 - 415 V / 3N / 50 Hz		
PERFORMANCE			Cooling		
Capacity		kW	7.3		
		BTU / h	25,000		
Air circulation (Hi / Me / Lo)		m^3/h	1,140 / 1,020 / 840		
Moisture removal (High)		Liters/h	3.6		
ELECTRICAL RATINGS					
Voltage rating		V	380	400	415
Available voltage range		V	342 – 456		
Running amperes*		A	4.82	4.78	4.73
Max. running amperes**		A	5.67	5.68	5.69
Power input		kW	2.76	2.79	2.82
Power factor		%	87	84	83
C.O.P		W / W	2.64	2.62	2.59
Max. starting amperes		A	27	29	30
FEATURES					
Controls / Thermostat control			Microprocessor		
Timer			ON / OFF 12-hours	ON/OFF 24-hours & Program	
Fan speeds Indoor / Outdoor			3 and Automatic control / 3 (Auto)		
Airflow direction (Indoor)			Automatic (Remote control)		
Air filter			Washable, easy access, long life (2,500 hr)		
Remote controller (Option)			Wired : RCS-31G(W)	Wireless : RCS-5PS3E	
Refrigerant control			Capillary tube		
Drain pump (Drain connection)			Max. head 25 cm above drain connection (25A, OD32 mm)		
Compressor			Rotary (Sanyo)		
Operation sound	Indoor - Hi/Me/Lo	dB - A	37 / 35 / 31		
	Outdoor - Hi	dB - A	52		
Color (Approximate value)	Indoor		Munsell 10Y9.3 / 0.4, RAL 9010-GL		
	Outdoor		Munsell 6.96Y8.13 / 0.2, RAL 7035-GL		
REFRIGERANT TUBING					
Limit of tubing length		m (ft.)	40 (131)		
Limit of tubing length at shipment		m (ft.)	15 (49)		
Limit of elevation difference between the two units		m (ft.)	Outdoor unit is higher than indoor unit : 40 (131) Outdoor unit is lower than indoor unit : 30 (98)		
Refrigerant tube outer diameter	Narrow tube	mm (in.)	6.35 (1 / 4)		
	Wide tube	mm (in.)	15.88 (5 / 8)		
Refrigerant amount at shipment		kg	R407C - 3.0		
DIMENSIONS & WEIGHT			Indoor unit (Include panel)		Outdoor unit
Unit dimensions	Height	mm (in.)	328 (12 - 29 / 32)		735 (28 - 30 / 32)
	Width	mm (in.)	860 (33 - 27 / 32)		940 (37)
	Depth	mm (in.)	860 (33 - 27 / 32)		340 (13 - 12 / 32)
Package dimensions			Body	Panel	Outdoor unit
	Height mm (in.)		284 (11 - 6 / 32)	104 (4 - 3 / 32)	826 (32 - 17 / 32)
	Width mm (in.)		824 (32 - 14 / 32)	967 (38 - 2 / 32)	1,016 (40)
	Depth mm (in.)		833 (32 - 25 / 32)	999 (39 - 11 / 32)	416 (16 - 12 / 32)
Net weight		kg (lb.)	30 (66)		69 (152)
Shipping weight		kg (lb.)	27 (60)	8 (18)	75 (165)
Shipping volume		m^3 (cu. ft)	0.195 (6.9)	0.1 (3.5)	0.349 (12.3)

DATA SUBJECT TO CHANGE WITHOUT NOTICE.

Cooling:
Rating conditions (*): Indoor air temperature 27 °C DB / 19 °C WB, Outdoor air temperature 35 °C DB
Full load conditions (**): Indoor air temperature 32 °C DB / 23 °C WB, Outdoor air temperature 43 °C DB

MODEL No.	Indoor Unit		AS436C		
	Outdoor Unit		AER536SC3E		
POWER SOURCE			380 - 400 - 415 V / 3N / 50 Hz		
PERFORMANCE			Cooling		
Capacity		kW	10.6		
		BTU / h	36,000		
Air circulation (Hi / Me / Lo)		m^3/h	1,920 / 1,680 / 1,320		
Moisture removal (High)		Liters/h	4.6		
ELECTRICAL RATINGS					
Voltage rating		V	380	400	415
Available voltage range		V	342 – 456		
Running amperes*		A	7.01	7.02	7.05
Max. running amperes**		A	7.86	7.78	7.9
Power input		kW	3.92	3.97	4.02
Power factor		%	85	82	79
C.O.P		W / W	2.7	2.67	2.64
Max. starting amperes		A	47	49	50
FEATURES					
Controls / Thermostat control			Microprocessor		
Timer			ON / OFF 12-hours	ON/OFF 24-hours & Program	
Fan speeds Indoor / Outdoor			3 and Automatic control / 2 (Auto)		
Airflow direction (Indoor)			Automatic (Remote control)		
Air filter			Washable, easy access, long life (2,500 hr)		
Remote controller (Option)			Wired : RCS-31G(W)	Wireless : RCS-5PS3E	
Refrigerant control			Capillary tube		
Drain pump (Drain connection)			Max. head 25 cm above drain connection (25A, OD32 mm)		
Compressor			Scroll (Sanyo)		
Operation sound	Indoor - Hi/Me/Lo	dB - A	43 / 40 / 36		
	Outdoor - Hi	dB - A	53		
Color (Approximate value)	Indoor		Munsell 10Y9.3 / 0.4, RAL 9010-GL		
	Outdoor		Munsell 6.96Y8.13 / 0.2, RAL 7035-GL		
REFRIGERANT TUBING					
Limit of tubing length		m (ft.)	50 (164)		
Limit of tubing length at shipment		m (ft.)	15 (49)		
Limit of elevation difference between the two units		m (ft.)	Outdoor unit is higher than indoor unit : 50 (164) Outdoor unit is lower than indoor unit : 30 (98)		
Refrigerant tube outer diameter	Narrow tube	mm (in.)	9.52 (3 / 8)		
	Wide tube	mm (in.)	19.05 (3 / 4)		
Refrigerant amount at shipment		kg	R407C - 4.0		
DIMENSIONS & WEIGHT			Indoor unit (Include panel)		Outdoor unit
Unit dimensions	Height	mm (in.)	358 (14 - 3 / 32)		1,235 (48 - 20 / 32)
	Width	mm (in.)	1,150 (45 - 9 / 32)		940 (37)
	Depth	mm (in.)	860 (33 - 27 / 32)		340 (13 - 12 / 32)
Package dimensions			Body	Panel	Outdoor unit
	Height mm (in.)		316 (12 - 14 / 32)	104 (4 - 3 / 32)	1,326 (52 - 7 / 32)
	Width mm (in.)		1,114 (43 - 27 / 32)	1,257 (49 - 16 / 32)	1,016 (40)
	Depth mm (in.)		860 (33 - 27 / 32)	999 (39 - 11 / 32)	416 (16 - 12 / 32)
Net weight		kg (lb.)	38 (84)		104 (229)
Shipping weight		kg (lb.)	32 (71)	10 (22)	111 (245)
Shipping volume		m^3 (cu. ft)	0.303 (10.7)	0.131 (4.6)	0.56 (19.8)

DATA SUBJECT TO CHANGE WITHOUT NOTICE.

Cooling:
Rating conditions (*): Indoor air temperature 27 °C DB / 19 °C WB, Outdoor air temperature 35 °C DB
Full load conditions (**): Indoor air temperature 32 °C DB / 23 °C WB, Outdoor air temperature 43 °C DB

MODEL No.	Indoor Unit		AS436C		
	Outdoor Unit		AER536SCL3E		
POWER SOURCE			380 - 400 - 415 V / 3N / 50 Hz		
PERFORMANCE			Cooling		
Capacity		kW	10.6		
		BTU / h	36,000		
Air circulation (Hi / Me / Lo)		m^3/h	1,920 / 1,680 / 1,320		
Moisture removal (High)		Liters/h	4.6		
ELECTRICAL RATINGS					
Voltage rating		V	380	400	415
Available voltage range		V	342 – 456		
Running amperes*		A	7.01	7.02	7.05
Max. running amperes**		A	7.86	7.78	7.9
Power input		kW	3.92	3.97	4.02
Power factor		%	85	82	79
C.O.P		W / W	2.7	2.67	2.64
Max. starting amperes		A	47	49	50
FEATURES					
Controls / Thermostat control			Microprocessor		
Timer			ON / OFF 12-hours	ON/OFF 24-hours & Program	
Fan speeds Indoor / Outdoor			3 and Automatic control / 3 (Auto)		
Airflow direction (Indoor)			Automatic (Remote control)		
Air filter			Washable, easy access, long life (2,500 hr)		
Remote controller (Option)			Wired : RCS-31G(W)	Wireless : RCS-5PS3E	
Refrigerant control			Capillary tube		
Drain pump (Drain connection)			Max. head 25 cm above drain connection (25A, OD32 mm)		
Compressor			Scroll (Sanyo)		
Operation sound	Indoor - Hi/Me/Lo	dB - A	43 / 40 / 36		
	Outdoor - Hi	dB - A	53		
Color (Approximate value)	Indoor		Munsell 10Y9.3 / 0.4, RAL 9010-GL		
	Outdoor		Munsell 6.96Y8.13 / 0.2, RAL 7035-GL		
REFRIGERANT TUBING					
Limit of tubing length		m (ft.)	50 (164)		
Limit of tubing length at shipment		m (ft.)	15 (49)		
Limit of elevation difference between the two units		m (ft.)	Outdoor unit is higher than indoor unit : 50 (164) Outdoor unit is lower than indoor unit : 30 (98)		
Refrigerant tube outer diameter	Narrow tube	mm (in.)	9.52 (3 / 8)		
	Wide tube	mm (in.)	19.05 (3 / 4)		
Refrigerant amount at shipment		kg	R407C - 4.0		
DIMENSIONS & WEIGHT			Indoor unit (Include panel)		Outdoor unit
Unit dimensions	Height	mm (in.)	358 (14 - 3 / 32)		1,235 (48 - 20 / 32)
	Width	mm (in.)	1,150 (45 - 9 / 32)		940 (37)
	Depth	mm (in.)	860 (33 - 27 / 32)		340 (13 - 12 / 32)
Package dimensions			Body	Panel	Outdoor unit
	Height mm (in.)		316 (12 - 14 / 32)	104 (4 - 3 / 32)	1,326 (52 - 7 / 32)
	Width mm (in.)		1,114 (43 - 27 / 32)	1,257 (49 - 16 / 32)	1,016 (40)
	Depth mm (in.)		860 (33 - 27 / 32)	999 (39 - 11 / 32)	416 (16 - 12 / 32)
Net weight		kg (lb.)	38 (84)		104 (229)
Shipping weight		kg (lb.)	32 (71)	10 (22)	111 (245)
Shipping volume		m^3 (cu. ft)	0.303 (10.7)	0.131 (4.6)	0.56 (19.8)

DATA SUBJECT TO CHANGE WITHOUT NOTICE.

Cooling:
Rating conditions (*): Indoor air temperature 27 °C DB / 19 °C WB, Outdoor air temperature 35 °C DB
Full load conditions (**): Indoor air temperature 32 °C DB / 23 °C WB, Outdoor air temperature 43 °C DB

MODEL No.	Indoor Unit		AS448C		
	Outdoor Unit		AER548SC3E		
POWER SOURCE			380 - 400 - 415 V / 3N / 50 Hz		
PERFORMANCE			Cooling		
Capacity		kW	12.6		
		BTU / h	43,000		
Air circulation (Hi / Me / Lo)		m^3/h	1,920 / 1,680 / 1,320		
Moisture removal (High)		Liters/h	6.3		
ELECTRICAL RATINGS					
Voltage rating		V	380	400	415
Available voltage range		V	342 – 456		
Running amperes*		A	8.35	8.35	8.37
Max. running amperes**		A	9.47	9.47	9.49
Power input		kW	4.6	4.64	4.67
Power factor		%	84	80	78
C.O.P		W / W	2.74	2.72	2.7
Max. starting amperes		A	53	56	58
FEATURES					
Controls / Thermostat control			Microprocessor		
Timer			ON / OFF 12-hours	ON/OFF 24-hours & Program	
Fan speeds Indoor / Outdoor			3 and Automatic control / 2 (Auto)		
Airflow direction (Indoor)			Automatic (Remote control)		
Air filter			Washable, easy access, long life (2,500 hr)		
Remote controller (Option)			Wired : RCS-31G(W)	Wireless : RCS-5PS3E	
Refrigerant control			Capillary tube		
Drain pump (Drain connection)			Max. head 25 cm above drain connection (25A, OD32 mm)		
Compressor			Scroll (Sanyo)		
Operation sound	Indoor - Hi/Me/Lo	dB - A	43 / 40 / 36		
	Outdoor - Hi	dB - A	55		
Color (Approximate value)	Indoor		Munsell 10Y9.3 / 0.4, RAL 9010-GL		
	Outdoor		Munsell 6.96Y8.13 / 0.2, RAL 7035-GL		
REFRIGERANT TUBING					
Limit of tubing length		m (ft.)	50 (164)		
Limit of tubing length at shipment		m (ft.)	15 (49)		
Limit of elevation difference between the two units		m (ft.)	Outdoor unit is higher than indoor unit : 50 (164) Outdoor unit is lower than indoor unit : 30 (98)		
Refrigerant tube outer diameter	Narrow tube	mm (in.)	9.52 (3 / 8)		
	Wide tube	mm (in.)	19.05 (3 / 4)		
Refrigerant amount at shipment		kg	R407C - 4.3		
DIMENSIONS & WEIGHT			Indoor unit (Include panel)		Outdoor unit
Unit dimensions	Height	mm (in.)	358 (14 - 3 / 32)		1,235 (48 - 20 / 32)
	Width	mm (in.)	1,150 (45 - 9 / 32)		940 (37)
	Depth	mm (in.)	860 (33 - 27 / 32)		340 (13 - 12 / 32)
Package dimensions			Body	Panel	Outdoor unit
	Height mm (in.)		316 (12 - 14 / 32)	104 (4 - 3 / 32)	1,326 (52 - 7 / 32)
	Width mm (in.)		1,114 (43 - 27 / 32)	1,257 (49 - 16 / 32)	1,016 (40)
	Depth mm (in.)		860 (33 - 27 / 32)	999 (39 - 11 / 32)	416 (16 - 12 / 32)
Net weight		kg (lb.)	38 (84)		106 (234)
Shipping weight		kg (lb.)	32 (71)	10 (22)	113 (249)
Shipping volume		m^3 (cu. ft)	0.303 (10.7)	0.131 (4.6)	0.56 (19.8)

DATA SUBJECT TO CHANGE WITHOUT NOTICE.

Cooling:
Rating conditions (*): Indoor air temperature 27 °C DB / 19 °C WB, Outdoor air temperature 35 °C DB
Full load conditions (**): Indoor air temperature 32 °C DB / 23 °C WB, Outdoor air temperature 43 °C DB

MODEL No.	Indoor Unit		AS448C		
	Outdoor Unit		AER548SCL3E		
POWER SOURCE			380 - 400 - 415 V / 3N / 50 Hz		
PERFORMANCE			Cooling		
Capacity		kW	12.6		
		BTU / h	43,000		
Air circulation (Hi / Me / Lo)		m^3/h	1,920 / 1,680 / 1,320		
Moisture removal (High)		Liters/h	6.3		
ELECTRICAL RATINGS					
Voltage rating		V	380	400	415
Available voltage range		V	342 – 456		
Running amperes*		A	8.35	8.35	8.37
Max. running amperes**		A	9.47	9.47	9.49
Power input		kW	4.6	4.64	4.67
Power factor		%	84	80	78
C.O.P		W / W	2.74	2.72	2.7
Max. starting amperes		A	53	56	58
FEATURES					
Controls / Thermostat control			Microprocessor		
Timer			ON / OFF 12-hours	ON/OFF 24-hours & Program	
Fan speeds Indoor / Outdoor			3 and Automatic control / 3 (Auto)		
Airflow direction (Indoor)			Automatic (Remote control)		
Air filter			Washable, easy access, long life (2,500 hr)		
Remote controller (Option)			Wired : RCS-31G(W)	Wireless : RCS-5PS3E	
Refrigerant control			Capillary tube		
Drain pump (Drain connection)			Max. head 25 cm above drain connection (25A, OD32 mm)		
Compressor			Scroll (Sanyo)		
Operation sound	Indoor - Hi/Me/Lo	dB - A	43 / 40 / 36		
	Outdoor - Hi	dB - A	55		
Color (Approximate value)	Indoor		Munsell 10Y9.3 / 0.4, RAL 9010-GL		
	Outdoor		Munsell 6.96Y8.13 / 0.2, RAL 7035-GL		
REFRIGERANT TUBING					
Limit of tubing length		m (ft.)	50 (164)		
Limit of tubing length at shipment		m (ft.)	15 (49)		
Limit of elevation difference between the two units		m (ft.)	Outdoor unit is higher than indoor unit : 50 (164) Outdoor unit is lower than indoor unit : 30 (98)		
Refrigerant tube outer diameter	Narrow tube	mm (in.)	9.52 (3 / 8)		
	Wide tube	mm (in.)	19.05 (3 / 4)		
Refrigerant amount at shipment		kg	R407C - 4.3		
DIMENSIONS & WEIGHT			Indoor unit (Include panel)		Outdoor unit
Unit dimensions	Height	mm (in.)	358 (14 - 3 / 32)		1,235 (48 - 20 / 32)
	Width	mm (in.)	1,150 (45 - 9 / 32)		940 (37)
	Depth	mm (in.)	860 (33 - 27 / 32)		340 (13 - 12 / 32)
Package dimensions			Body	Panel	Outdoor unit
	Height mm (in.)		316 (12 - 14 / 32)	104 (4 - 3 / 32)	1,326 (52 - 7 / 32)
	Width mm (in.)		1,114 (43 - 27 / 32)	1,257 (49 - 16 / 32)	1,016 (40)
	Depth mm (in.)		860 (33 - 27 / 32)	999 (39 - 11 / 32)	416 (16 - 12 / 32)
Net weight		kg (lb.)	38 (84)		106 (234)
Shipping weight		kg (lb.)	32 (71)	10 (22)	113 (249)
Shipping volume		m^3 (cu. ft)	0.303 (10.7)	0.131 (4.6)	0.56 (19.8)

DATA SUBJECT TO CHANGE WITHOUT NOTICE.

Cooling:
Rating conditions (*): Indoor air temperature 27 °C DB / 19 °C WB, Outdoor air temperature 35 °C DB
Full load conditions (**): Indoor air temperature 32 °C DB / 23 °C WB, Outdoor air temperature 43 °C DB

1-1 Unit Specifications

Ceiling Mounted Type

MODEL No.	Indoor Unit		AC425C		
	Outdoor Unit		AER525SCE		
POWER SOURCE			220 - 230 - 240 V / 1 phase / 50 Hz		
PERFORMANCE			Cooling		
Capacity		kW	7.3		
		BTU / h	25,000		
Air circulation (Hi / Me / Lo)		m^3/h	1,080 / 960 / 840		
Moisture removal (High)		Liters/h	3.5		
ELECTRICAL RATINGS					
Voltage rating		V	220	230	240
Available voltage range		V	198 – 264		
Running amperes*		A	13.2	13.3	13.4
Max. running amperes**		A	14.5	14.5	14.6
Power input		kW	2.72	2.83	2.89
Power factor		%	94	93	90
C.O.P		W / W	2.68	2.58	2.53
Max. starting amperes		A	69	72	75
FEATURES					
Controls / Thermostat control			Microprocessor		
Timer			ON / OFF 72-hours	ON/OFF 24-hours & Program	
Fan speeds Indoor / Outdoor			3 and Automatic control / 2 (Auto)		
Airflow direction (Indoor)			Automatic (Remote control)		
Air filter			Washable, easy access, long life (2,500 hr)		
Remote controller (Option)			Wired : RCS-T251G	Wireless : RCS-5PS3E	
Refrigerant control			Capillary tube		
Drain pump (Drain connection)			No (20A, OD26 mm)		
Compressor			Rotary (Sanyo)		
Operation sound	Indoor - Hi/Me/Lo	dB - A	39 / 37 / 34		
	Outdoor - Hi	dB - A	52		
Color (Approximate value)	Indoor		Munsell 10Y9.3 / 0.4, RAL 9010-GL		
	Outdoor		Munsell 6.96Y8.13 / 0.2, RAL 7035-GL		
REFRIGERANT TUBING					
Limit of tubing length		m (ft.)	40 (131)		
Limit of tubing length at shipment		m (ft.)	15 (49)		
Limit of elevation difference between the two units		m (ft.)	Outdoor unit is higher than indoor unit : 40 (131) Outdoor unit is lower than indoor unit : 30 (98)		
Refrigerant tube outer diameter	Narrow tube	mm (in.)	6.35 (1 / 4)		
	Wide tube	mm (in.)	15.88 (5 / 8)		
Refrigerant amount at shipment		kg	R407C - 2.4		
DIMENSIONS & WEIGHT			Indoor unit	Outdoor unit	
Unit dimensions	Height	mm (in.)	190 (7 - 15 / 32)	735 (28 - 30 / 32)	
	Width	mm (in.)	1,300 (51 - 6 / 32)	940 (37)	
	Depth	mm (in.)	670 (26 - 12 / 32)	340 (13 - 12 / 32)	
Package dimensions	Height	mm (in.)	266 (10 - 15 / 32)	826 (32 - 17 / 32)	
	Width	mm (in.)	1,403 (55 - 8 / 32)	1,016 (40)	
	Depth	mm (in.)	789 (31 - 2 / 32)	416 (16 - 12 / 32)	
Net weight		kg (lb.)	26 (57)	67 (148)	
Shipping weight		kg (lb.)	32 (71)	73 (161)	
Shipping volume		m^3 (cu. ft)	0.294 (10.4)	0.349 (12.3)	

DATA SUBJECT TO CHANGE WITHOUT NOTICE.

Cooling:
Rating conditions (*): Indoor air temperature 27 °C DB / 19 °C WB, Outdoor air temperature 35 °C DB
Full load conditions (**): Indoor air temperature 32 °C DB / 23 °C WB, Outdoor air temperature 43 °C DB

MODEL No.	Indoor Unit		AC425C		
	Outdoor Unit		AER525SC3E		
POWER SOURCE			380 - 400 - 415 V / 3N / 50 Hz		
PERFORMANCE			Cooling		
Capacity		kW	7.3		
		BTU / h	25,000		
Air circulation (Hi / Me / Lo)		m^3/h	1,080 / 960 / 840		
Moisture removal (High)		Liters/h	3.5		
ELECTRICAL RATINGS					
Voltage rating		V	380	400	415
Available voltage range		V	342 – 456		
Running amperes*		A	4.77	4.72	4.67
Max. running amperes**		A	5.62	5.63	5.64
Power input		kW	2.72	2.75	2.77
Power factor		%	87	84	83
C.O.P		W / W	2.68	2.65	2.64
Max. starting amperes		A	27	29	30
FEATURES					
Controls / Thermostat control			Microprocessor		
Timer			ON / OFF 72-hours	ON/OFF 24-hours & Program	
Fan speeds Indoor / Outdoor			3 and Automatic control / 2 (Auto)		
Airflow direction (Indoor)			Automatic (Remote control)		
Air filter			Washable, easy access, long life (2,500 hr)		
Remote controller (Option)			Wired : RCS-T251G	Wireless : RCS-5PS3EWL	
Refrigerant control			Capillary tube		
Drain pump (Drain connection)			No (20A, OD26 mm)		
Compressor			Rotary (Sanyo)		
Operation sound	Indoor - Hi/Me/Lo	dB - A	39 / 37 / 34		
	Outdoor - Hi	dB - A	52		
Color (Approximate value)	Indoor		Munsell 10Y9.3 / 0.4, RAL 9010-GL		
	Outdoor		Munsell 6.94Y8.13 / 0.2, RAL 7035-GL		
REFRIGERANT TUBING					
Limit of tubing length		m (ft.)	40 (131)		
Limit of tubing length at shipment		m (ft.)	15 (49)		
Limit of elevation difference between the two units		m (ft.)	Outdoor unit is higher than indoor unit : 40 (131) Outdoor unit is lower than indoor unit : 30 (98)		
Refrigerant tube outer diameter	Narrow tube	mm (in.)	6.35 (1 / 4)		
	Wide tube	mm (in.)	15.88 (5 / 8)		
Refrigerant amount at shipment		kg	R407C - 2.4		
DIMENSIONS & WEIGHT			Indoor unit	Outdoor unit	
Unit dimensions	Height	mm (in.)	190 (7 - 15 / 32)	735 (28 - 30 / 32)	
	Width	mm (in.)	1,300 (51 - 6 / 32)	940 (37)	
	Depth	mm (in.)	670 (26 - 12 / 32)	340 (13 - 12 / 32)	
Package dimensions	Height	mm (in.)	266 (10 - 15 / 32)	826 (32 - 17 / 32)	
	Width	mm (in.)	1,403 (55 - 8 / 32)	1,016 (40)	
	Depth	mm (in.)	789 (31 - 2 / 32)	416 (16 - 12 / 32)	
Net weight		kg (lb.)	26 (57)	69 (152)	
Shipping weight		kg (lb.)	32 (71)	75 (165)	
Shipping volume		m^3 (cu. ft)	0.294 (10.4)	0.349 (12.3)	

DATA SUBJECT TO CHANGE WITHOUT NOTICE.

Cooling:
Rating conditions (*): Indoor air temperature 27 °C DB / 19 °C WB, Outdoor air temperature 35 °C DB
Full load conditions (**): Indoor air temperature 32 °C DB / 23 °C WB, Outdoor air temperature 43 °C DB

MODEL No.	Indoor Unit		AC425C		
	Outdoor Unit		AER525SCL3E		
POWER SOURCE			380 - 400 - 415 V / 3N / 50 Hz		
PERFORMANCE			Cooling		
Capacity		kW	7.3		
		BTU / h	25,000		
Air circulation (Hi / Me / Lo)		m^3/h	1,080 / 960 / 840		
Moisture removal (High)		Liters/h	3.5		
ELECTRICAL RATINGS					
Voltage rating		V	380	400	415
Available voltage range		V	342 – 456		
Running amperes*		A	4.77	4.72	4.67
Max. running amperes**		A	5.62	5.63	5.64
Power input		kW	2.72	2.75	2.77
Power factor		%	87	84	83
C.O.P		W / W	2.68	2.65	2.64
Max. starting amperes		A	27	29	30
FEATURES					
Controls / Thermostat control			Microprocessor		
Timer			ON / OFF 72-hours	ON/OFF 24-hours & Program	
Fan speeds Indoor / Outdoor			3 and Automatic control / 3 (Auto)		
Airflow direction (Indoor)			Automatic (Remote control)		
Air filter			Washable, easy access, long life (2,500 hr)		
Remote controller (Option)			Wired : RCS-T251G	Wireless : RCS-5PS3EWL	
Refrigerant control			Capillary tube		
Drain pump (Drain connection)			No (20A, OD26 mm)		
Compressor			Rotary (Sanyo)		
Operation sound	Indoor - Hi/Me/Lo	dB - A	39 / 37 / 34		
	Outdoor - Hi	dB - A	52		
Color (Approximate value)	Indoor		Munsell 10Y9.3 / 0.4, RAL 9010-GL		
	Outdoor		Munsell 6.94Y8.13 / 0.2, RAL 7035-GL		
REFRIGERANT TUBING					
Limit of tubing length		m (ft.)	40 (131)		
Limit of tubing length at shipment		m (ft.)	15 (49)		
Limit of elevation difference between the two units		m (ft.)	Outdoor unit is higher than indoor unit : 40 (131) Outdoor unit is lower than indoor unit : 30 (98)		
Refrigerant tube outer diameter	Narrow tube	mm (in.)	6.35 (1 / 4)		
	Wide tube	mm (in.)	15.88 (5 / 8)		
Refrigerant amount at shipment		kg	R407C - 3.0		
DIMENSIONS & WEIGHT			Indoor unit	Outdoor unit	
Unit dimensions	Height	mm (in.)	190 (7 - 15 / 32)	735 (28 - 30 / 32)	
	Width	mm (in.)	1,300 (51 - 6 / 32)	940 (37)	
	Depth	mm (in.)	670 (26 - 12 / 32)	340 (13 - 12 / 32)	
Package dimensions	Height	mm (in.)	266 (10 - 15 / 32)	826 (32 - 17 / 32)	
	Width	mm (in.)	1,403 (55 - 8 / 32)	1,016 (40)	
	Depth	mm (in.)	789 (31 - 2 / 32)	416 (16 - 12 / 32)	
Net weight		kg (lb.)	26 (57)	69 (152)	
Shipping weight		kg (lb.)	32 (71)	75 (165)	
Shipping volume		m^3 (cu. ft)	0.294 (10.4)	0.349 (12.3)	

DATA SUBJECT TO CHANGE WITHOUT NOTICE.

Cooling:
Rating conditions (*): Indoor air temperature 27 °C DB / 19 °C WB, Outdoor air temperature 35 °C DB
Full load conditions (**): Indoor air temperature 32 °C DB / 23 °C WB, Outdoor air temperature 43 °C DB

MODEL No.	Indoor Unit		AC436C		
	Outdoor Unit		AER536SC3E		
POWER SOURCE			380 - 400 - 415 V / 3N / 50 Hz		
PERFORMANCE			Cooling		
Capacity		kW	10.6		
		BTU / h	36,000		
Air circulation (Hi / Me / Lo)		m^3/h	1,080 / 1,560 / 1,200		
Moisture removal (High)		Liters/h	4.7		
ELECTRICAL RATINGS					
Voltage rating		V	380	400	415
Available voltage range		V	342 – 456		
Running amperes*		A	7.01	7.02	7.06
Max. running amperes**		A	7.86	7.88	7.91
Power input		kW	3.92	3.97	4.02
Power factor		%	85	82	79
C.O.P		W / W	2.7	2.67	2.64
Max. starting amperes		A	47	49	50
FEATURES					
Controls / Thermostat control			Microprocessor		
Timer			ON / OFF 72-hours	ON/OFF 24-hours & Program	
Fan speeds Indoor / Outdoor			3 and Automatic control / 2 (Auto)		
Airflow direction (Indoor)			Automatic (Remote control)		
Air filter			Washable, easy access, long life (2,500 hr)		
Remote controller (Option)			Wired : RCS-T251G	Wireless : RCS-5PS3EWL	
Refrigerant control			Capillary tube		
Drain pump (Drain connection)			No (20A, OD26 mm)		
Compressor			Scroll (Sanyo)		
Operation sound	Indoor - Hi/Me/Lo	dB - A	42 / 40 / 35		
	Outdoor - Hi	dB - A	53		
Color (Approximate value)	Indoor		Munsell 10Y9.3 / 0.4, RAL 9010-GL		
	Outdoor		Munsell 6.96Y8.13 / 0.2, RAL 7035-GL		
REFRIGERANT TUBING					
Limit of tubing length		m (ft.)	50 (164)		
Limit of tubing length at shipment		m (ft.)	15 (49)		
Limit of elevation difference between the two units		m (ft.)	Outdoor unit is higher than indoor unit : 50 (164) Outdoor unit is lower than indoor unit : 30 (98)		
Refrigerant tube outer diameter	Narrow tube	mm (in.)	9.52 (3 / 8)		
	Wide tube	mm (in.)	19.05 (3 / 4)		
Refrigerant amount at shipment		kg	R407C - 4.0		
DIMENSIONS & WEIGHT			Indoor unit	Outdoor unit	
Unit dimensions	Height	mm (in.)	240 (9 - 14 / 32)	1,235 (48 - 20 / 32)	
	Width	mm (in.)	1,575 (62)	940 (37)	
	Depth	mm (in.)	670 (26 - 12 / 32)	340 (13 - 12 / 32)	
Package dimensions	Height	mm (in.)	317 (12 - 15 / 32)	1,326 (52 - 7 / 32)	
	Width	mm (in.)	1,678 (66 - 8 / 32)	1,016 (40)	
	Depth	mm (in.)	789 (31 - 2 / 32)	416 (16 - 12 / 32)	
Net weight		kg (lb.)	38 (84)	104 (229)	
Shipping weight		kg (lb.)	44 (97)	111 (245)	
Shipping volume		m^3 (cu. ft)	0.42 (14.8)	0.56 (19.8)	

DATA SUBJECT TO CHANGE WITHOUT NOTICE.

Cooling:
Rating conditions (*): Indoor air temperature 27 °C DB / 19 °C WB, Outdoor air temperature 35 °C DB
Full load conditions (**): Indoor air temperature 32 °C DB / 23 °C WB, Outdoor air temperature 43 °C DB

MODEL No.	Indoor Unit		AC436C		
	Outdoor Unit		AER536SCL3E		
POWER SOURCE			380 - 400 - 415 V / 3N / 50 Hz		
PERFORMANCE			Cooling		
Capacity		kW	10.6		
		BTU / h	36,000		
Air circulation (Hi / Me / Lo)		m^3/h	1,080 / 1,560 / 1,200		
Moisture removal (High)		Liters/h	4.7		
ELECTRICAL RATINGS					
Voltage rating		V	380	400	415
Available voltage range		V	342 – 456		
Running amperes*		A	7.01	7.02	7.06
Max. running amperes**		A	7.86	7.88	7.91
Power input		kW	3.92	3.97	4.02
Power factor		%	85	82	79
C.O.P		W / W	2.7	2.67	2.64
Max. starting amperes		A	47	49	50
FEATURES					
Controls / Thermostat control			Microprocessor		
Timer			ON / OFF 72-hours	ON/OFF 24-hours & Program	
Fan speeds Indoor / Outdoor			3 and Automatic control / 3 (Auto)		
Airflow direction (Indoor)			Automatic (Remote control)		
Air filter			Washable, easy access, long life (2,500 hr)		
Remote controller (Option)			Wired : RCS-T251G	Wireless : RCS-5PS3EWL	
Refrigerant control			Capillary tube		
Drain pump (Drain connection)			No (20A, OD26 mm)		
Compressor			Scroll (Sanyo)		
Operation sound	Indoor - Hi/Me/Lo	dB - A	42 / 40 / 35		
	Outdoor - Hi	dB - A	53		
Color (Approximate value)	Indoor		Munsell 10Y9.3 / 0.4, RAL 9010-GL		
	Outdoor		Munsell 6.96Y8.13 / 0.2, RAL 7035-GL		
REFRIGERANT TUBING					
Limit of tubing length		m (ft.)	50 (164)		
Limit of tubing length at shipment		m (ft.)	15 (49)		
Limit of elevation difference between the two units		m (ft.)	Outdoor unit is higher than indoor unit : 50 (164) Outdoor unit is lower than indoor unit : 30 (98)		
Refrigerant tube outer diameter	Narrow tube	mm (in.)	9.52 (3 / 8)		
	Wide tube	mm (in.)	19.05 (3 / 4)		
Refrigerant amount at shipment		kg	R407C - 4.0		
DIMENSIONS & WEIGHT			Indoor unit	Outdoor unit	
Unit dimensions	Height	mm (in.)	240 (9 - 14 / 32)	1,235 (48 - 20 / 32)	
	Width	mm (in.)	1,575 (62)	940 (37)	
	Depth	mm (in.)	670 (26 - 12 / 32)	340 (13 - 12 / 32)	
Package dimensions	Height	mm (in.)	317 (12 - 15 / 32)	1,326 (52 - 7 / 32)	
	Width	mm (in.)	1,678 (66 - 2 / 32)	1,016 (40)	
	Depth	mm (in.)	789 (31 - 2 / 32)	416 (16 - 12 / 32)	
Net weight		kg (lb.)	38 (84)	104 (229)	
Shipping weight		kg (lb.)	44 (97)	111 (245)	
Shipping volume		m^3 (cu. ft)	0.42 (14.8)	0.56 (19.8)	

DATA SUBJECT TO CHANGE WITHOUT NOTICE.

Cooling:
Rating conditions (*): Indoor air temperature 27 °C DB / 19 °C WB, Outdoor air temperature 35 °C DB
Full load conditions (**): Indoor air temperature 32 °C DB / 23 °C WB, Outdoor air temperature 43 °C DB

MODEL No.	Indoor Unit		AC448C		
	Outdoor Unit		AER548SCE		
POWER SOURCE			380 - 400 - 415 V / 3N / 50 Hz		
PERFORMANCE			Cooling		
Capacity		kW	12.6		
		BTU / h	43,000		
Air circulation (Hi / Me / Lo)		m^3/h	1,920 / 1,680 / 1,320		
Moisture removal (High)		Liters/h	5.9		
ELECTRICAL RATINGS					
Voltage rating		V	380	400	415
Available voltage range		V	342 – 456		
Running amperes*		A	8.35	8.35	8.38
Max. running amperes**		A	9.47	9.48	9.5
Power input		kW	4.6	4.64	4.67
Power factor		%	84	80	80
C.O.P		W / W	2.74	2.72	2.7
Max. starting amperes		A	53	56	58
FEATURES					
Controls / Thermostat control			Microprocessor		
Timer			ON / OFF 72-hours	ON/OFF 24-hours & Program	
Fan speeds Indoor / Outdoor			3 and Automatic control / 2 (Auto)		
Airflow direction (Indoor)			Automatic (Remote control)		
Air filter			Washable, easy access, long life (2,500 hr)		
Remote controller (Option)			Wired : RCS-T251G	Wireless : RCS-5PS3EWL	
Refrigerant control			Capillary tube		
Drain pump (Drain connection)			No (20A, OD26 mm)		
Compressor			Scroll (Sanyo)		
Operation sound	Indoor - Hi/Me/Lo	dB - A	44 / 41 / 37		
	Outdoor - Hi	dB - A	55		
Color (Approximate value)	Indoor		Munsell 10Y9.3 / 0.4, RAL 9010-GL		
	Outdoor		Munsell 6.96Y8.13 / 0.2, RAL 7035-GL		
REFRIGERANT TUBING					
Limit of tubing length		m (ft.)	50 (164)		
Limit of tubing length at shipment		m (ft.)	15 (49)		
Limit of elevation difference between the two units		m (ft.)	Outdoor unit is higher than indoor unit : 50 (164) Outdoor unit is lower than indoor unit : 30 (98)		
Refrigerant tube outer diameter	Narrow tube	mm (in.)	9.52 (3 / 8)		
	Wide tube	mm (in.)	19.05 (3 / 4)		
Refrigerant amount at shipment		kg	R407C - 4.3		
DIMENSIONS & WEIGHT			Indoor unit	Outdoor unit	
Unit dimensions	Height	mm (in.)	240 (9 - 14 / 32)	1,235 (48 - 20 / 32)	
	Width	mm (in.)	1,575 (62)	940 (37)	
	Depth	mm (in.)	670 (26 - 12 / 32)	340 (13 - 12 / 32)	
Package dimensions	Height	mm (in.)	317 (12 - 15 / 32)	1,326 (52 - 7 / 32)	
	Width	mm (in.)	1,678 (66 - 2 / 32)	1,016 (40)	
	Depth	mm (in.)	789 (31 - 2 / 32)	416 (16 - 12 / 32)	
Net weight		kg (lb.)	38 (84)	106 (234)	
Shipping weight		kg (lb.)	44 (97)	113 (249)	
Shipping volume		m^3 (cu. ft)	0.42 (14.8)	0.56 (19.8)	

DATA SUBJECT TO CHANGE WITHOUT NOTICE.

Cooling:
Rating conditions (*): Indoor air temperature 27 °C DB / 19 °C WB, Outdoor air temperature 35 °C DB
Full load conditions (**): Indoor air temperature 32 °C DB / 23 °C WB, Outdoor air temperature 43 °C DB

MODEL No.	Indoor Unit		AC448C		
	Outdoor Unit		AER548SCL3E		
POWER SOURCE			380 - 400 - 415 V / 3N / 50 Hz		
PERFORMANCE			Cooling		
Capacity		kW	12.6		
		BTU / h	43,000		
Air circulation (Hi / Me / Lo)		m^3/h	1,920 / 1,680 / 1,320		
Moisture removal (High)		Liters/h	5.9		
ELECTRICAL RATINGS					
Voltage rating		V	380	400	415
Available voltage range		V	342 – 456		
Running amperes*		A	8.35	8.35	8.38
Max. running amperes**		A	9.47	9.48	9.5
Power input		kW	4.6	4.64	4.67
Power factor		%	84	80	80
C.O.P		W / W	2.74	2.72	2.7
Max. starting amperes		A	53	56	58
FEATURES					
Controls / Thermostat control			Microprocessor		
Timer			ON / OFF 72-hours	ON/OFF 24-hours & Program	
Fan speeds Indoor / Outdoor			3 and Automatic control / 3 (Auto)		
Airflow direction (Indoor)			Automatic (Remote control)		
Air filter			Washable, easy access, long life (2,500 hr)		
Remote controller (Option)			Wired : RCS-T251G	Wireless : RCS-5PS3EWL	
Refrigerant control			Capillary tube		
Drain pump (Drain connection)			No (20A, OD26 mm)		
Compressor			Scroll (Sanyo)		
Operation sound	Indoor - Hi/Me/Lo	dB - A	44 / 41 / 37		
	Outdoor - Hi	dB - A	55		
Color (Approximate value)	Indoor		Munsell 10Y9.3 / 0.4, RAL 9010-GL		
	Outdoor		Munsell 6.96Y8.13 / 0.2, RAL 7035-GL		
REFRIGERANT TUBING					
Limit of tubing length		m (ft.)	50 (164)		
Limit of tubing length at shipment		m (ft.)	15 (49)		
Limit of elevation difference between the two units		m (ft.)	Outdoor unit is higher than indoor unit : 50 (164) Outdoor unit is lower than indoor unit : 30 (98)		
Refrigerant tube outer diameter	Narrow tube	mm (in.)	9.52 (3 / 8)		
	Wide tube	mm (in.)	19.05 (3 / 4)		
Refrigerant amount at shipment		kg	R407C - 4.3		
DIMENSIONS & WEIGHT			Indoor unit	Outdoor unit	
Unit dimensions	Height	mm (in.)	240 (9 - 14 / 32)	1,235 (48 - 20 / 32)	
	Width	mm (in.)	1,575 (62)	940 (37)	
	Depth	mm (in.)	670 (26 - 12 / 32)	340 (13 - 12 / 32)	
Package dimensions	Height	mm (in.)	317 (12 - 15 / 32)	1,326 (52 - 7 / 32)	
	Width	mm (in.)	1,678 (66 - 2 / 32)	1,016 (40)	
	Depth	mm (in.)	789 (31 - 2 / 32)	416 (16 - 12 / 32)	
Net weight		kg (lb.)	38 (84)	106 (234)	
Shipping weight		kg (lb.)	44 (97)	113 (249)	
Shipping volume		m^3 (cu. ft)	0.42 (14.8)	0.56 (19.8)	

DATA SUBJECT TO CHANGE WITHOUT NOTICE.

Cooling:
Rating conditions (*): Indoor air temperature 27 °C DB / 19 °C WB, Outdoor air temperature 35 °C DB
Full load conditions (**): Indoor air temperature 32 °C DB / 23 °C WB, Outdoor air temperature 43 °C DB

1-1 Unit Specifications

Concealed Duct Type

MODEL No.	Indoor Unit		AD425CW		
	Outdoor Unit		AER525SCE		
POWER SOURCE			220 - 230 - 240 V / 1 phase / 50 Hz		
PERFORMANCE			Cooling		
Capacity		kW	7.3		
		BTU / h	25,000		
Air circulation (Hi / Me / Lo)		m^3/h	1,080 / 900 / 780		
Moisture removal (High)		Liters/h	3.5		
External static pressure (High)		mmAq(Pa)	50 (5.1) : at shipment, 92 (9.4) : using the booster cable		
ELECTRICAL RATINGS					
Voltage rating		VAC	220	230	240
Available voltage range		VAC	198 – 264		
Running amperes*		A	14.7	14.6	14.5
Max. running amperes**		A	15.7	15.5	15.4
Power input		kW	2.95	3.08	3.15
Power factor		%	92	92	90
C.O.P		W / W	2.47	2.37	2.32
Max. starting amperes		A	69	72	75
FEATURES					
Controls / Thermostat control			Microprocessor		
Timer			ON / OFF 72-hours		
Fan speeds Indoor / Outdoor			3 and Automatic control / 2 (Auto)		
Airflow direction (Indoor)			—		
Air filter			Field supply		
Remote controller (Option)			Wired : RCS-U251G		
Refrigerant control			Capillary tube		
Drain pump (Drain connection)			Max. head 75 cm above unit bottom (25A, OD32 mm)		
Compressor			Rotary (Sanyo)		
Operation sound	Indoor - Hi/Me/Lo	dB - A	34 / 30 / 27, (38 / 34 / 30 : using the booster cable)		
	Outdoor - Hi	dB - A	52		
Color (Approximate value)	Indoor		—		
	Outdoor		Munsell 6.96Y8.13 / 0.2, RAL 7035-GL		
REFRIGERANT TUBING					
Limit of tubing length		m (ft.)	40 (131)		
Limit of tubing length at shipment		m (ft.)	15 (49)		
Limit of elevation difference between the two units		m (ft.)	Outdoor unit is higher than indoor unit : 40 (131) Outdoor unit is lower than indoor unit : 30 (98)		
Refrigerant tube outer diameter	Narrow tube	mm (in.)	6.35 (1 / 4)		
	Wide tube	mm (in.)	15.88 (5 / 8)		
Refrigerant amount at shipment		kg	R407C - 2.4		
DIMENSIONS & WEIGHT			Indoor unit	Outdoor unit	
Unit dimensions	Height	mm (in.)	310 (12 - 7 / 32)	735 (28 - 30 / 32)	
	Width	mm (in.)	1,000 (39 - 12 / 32)	940 (37)	
	Depth	mm (in.)	630 (24 - 26 / 32)	340 (13 - 12 / 32)	
Package dimensions	Height	mm (in.)	358 (14 - 3 / 32)	826 (32 - 17 / 32)	
	Width	mm (in.)	1,191 (46 - 28 / 32)	1,016 (40)	
	Depth	mm (in.)	783 (30 - 26 / 32)	416 (16 - 12 / 32)	
Net weight		kg (lb.)	32 (71)	67 (148)	
Shipping weight		kg (lb.)	37 (82)	73 (161)	
Shipping volume		m^3 (cu. ft)	0.334 (11.8)	0.349 (12.3)	

DATA SUBJECT TO CHANGE WITHOUT NOTICE.

Cooling:
Rating conditions (*): Indoor air temperature 27 °C DB / 19 °C WB, Outdoor air temperature 35 °C DB
Full load conditions (**): Indoor air temperature 32 °C DB / 23 °C WB, Outdoor air temperature 43 °C DB

MODEL No.	Indoor Unit		AD425CW		
	Outdoor Unit		AER525SC3E		
POWER SOURCE			380 - 400 - 415 V / 3N / 50 Hz		
PERFORMANCE			Cooling		
Capacity		kW	7.3		
		BTU / h	25,000		
Air circulation (Hi / Me / Lo)		m^3/h	1,080 / 900 / 780		
Moisture removal (High)		Liters/h	3.5		
External static pressure (High)		mmAq(Pa)	50 (5.1) : at shipment, 92 (9.4) : using the booster cable		
ELECTRICAL RATINGS					
Voltage rating		VAC	380	400	415
Available voltage range		VAC	342 – 456		
Running amperes*		A	5.14	5.05	5.00
Max. running amperes**		A	5.74	5.75	5.76
Power input		kW	2.96	3.00	3.03
Power factor		%	88	86	84
C.O.P		W / W	2.47	2.43	2.41
Max. starting amperes		A	27	29	30
FEATURES					
Controls / Thermostat control			Microprocessor		
Timer			ON / OFF 12-hours		
Fan speeds Indoor / Outdoor			3 and Automatic control / 2 (Auto)		
Airflow direction (Indoor)			—		
Air filter			Field supply		
Remote controller (Option)			Wired : RCS-U251G		
Refrigerant control			Capillary tube		
Drain pump (Drain connection)			Max. head 75 cm above unit bottom (25A, OD32 mm)		
Compressor			Rotary (Sanyo)		
Operation sound	Indoor - Hi/Me/Lo	dB - A	34 / 30 / 27, (38 / 34 / 30 : using the booster cable)		
	Outdoor - Hi	dB - A	52		
Color (Approximate value)	Indoor		—		
	Outdoor		Munsell 6.96Y8.13 / 0.2, RAL 7035-GL		
REFRIGERANT TUBING					
Limit of tubing length		m (ft.)	40 (131)		
Limit of tubing length at shipment		m (ft.)	15 (49)		
Limit of elevation difference between the two units		m (ft.)	Outdoor unit is higher than indoor unit : 40 (131) Outdoor unit is lower than indoor unit : 30 (98)		
Refrigerant tube outer diameter	Narrow tube	mm (in.)	6.35 (1 / 4)		
	Wide tube	mm (in.)	15.88 (5 / 8)		
Refrigerant amount at shipment		kg	R407C - 2.4		
DIMENSIONS & WEIGHT			Indoor unit	Outdoor unit	
Unit dimensions	Height	mm (in.)	310 (12 - 7 / 32)	735 (28 - 30 / 32)	
	Width	mm (in.)	1,000 (39 - 12 / 32)	940 (37)	
	Depth	mm (in.)	630 (24 - 26 / 32)	340 (13 - 12 / 32)	
Package dimensions	Height	mm (in.)	358 (14 - 3 / 32)	826 (32 - 17 / 32)	
	Width	mm (in.)	1,191 (46 - 28 / 32)	1,016 (40)	
	Depth	mm (in.)	783 (30 - 26 / 32)	416 (16 - 12 / 32)	
Net weight		kg (lb.)	32 (71)	67 (148)	
Shipping weight		kg (lb.)	37 (82)	73 (161)	
Shipping volume		m^3 (cu. ft)	0.334 (11.8)	0.349 (12.3)	

DATA SUBJECT TO CHANGE WITHOUT NOTICE.

Cooling:
Rating conditions (*): Indoor air temperature 27 °C DB / 19 °C WB, Outdoor air temperature 35 °C DB
Full load conditions (**): Indoor air temperature 32 °C DB / 23 °C WB, Outdoor air temperature 43 °C DB

MODEL No.	Indoor Unit		AD425CW		
	Outdoor Unit		AER525SCL3E		
POWER SOURCE			380 - 400 - 415 V / 3N / 50 Hz		
PERFORMANCE			Cooling		
Capacity		kW	7.3		
		BTU / h	25,000		
Air circulation (Hi / Me / Lo)		m^3/h	1,080 / 900 / 780		
Moisture removal (High)		Liters/h	3.5		
External static pressure (High)		mmAq(Pa)	50 (5.1) : at shipment, 92 (9.4) : using the booster cable		
ELECTRICAL RATINGS					
Voltage rating		VAC	380	400	415
Available voltage range		VAC	342 – 456		
Running amperes*		A	5.14	5.05	5.00
Max. running amperes**		A	5.74	5.75	5.76
Power input		kW	2.96	3.00	3.03
Power factor		%	88	86	84
C.O.P		W / W	2.47	2.43	2.41
Max. starting amperes		A	27	29	30
FEATURES					
Controls / Thermostat control			Microprocessor		
Timer			ON / OFF 12-hours		
Fan speeds Indoor / Outdoor			3 and Automatic control / 3 (Auto)		
Airflow direction (Indoor)			—		
Air filter			Field supply		
Remote controller (Option)			Wired : RCS-U251G		
Refrigerant control			Capillary tube		
Drain pump (Drain connection)			Max. head 75 cm above unit bottom (25A, OD32 mm)		
Compressor			Rotary (Sanyo)		
Operation sound	Indoor - Hi/Me/Lo	dB - A	34 / 30 / 27, (38 / 34 / 30 : using the booster cable)		
	Outdoor - Hi	dB - A	52		
Color (Approximate value)	Indoor		—		
	Outdoor		Munsell 6.96Y8.13 / 0.2, RAL 7035-GL		
REFRIGERANT TUBING					
Limit of tubing length		m (ft.)	40 (131)		
Limit of tubing length at shipment		m (ft.)	15 (49)		
Limit of elevation difference between the two units		m (ft.)	Outdoor unit is higher than indoor unit : 40 (131) Outdoor unit is lower than indoor unit : 30 (98)		
Refrigerant tube outer diameter	Narrow tube	mm (in.)	6.35 (1 / 4)		
	Wide tube	mm (in.)	15.88 (5 / 8)		
Refrigerant amount at shipment		kg	R407C - 3.0		
DIMENSIONS & WEIGHT			Indoor unit	Outdoor unit	
Unit dimensions	Height	mm (in.)	310 (12 - 7 / 32)	735 (28 - 30 / 32)	
	Width	mm (in.)	1,000 (39 - 12 / 32)	940 (37)	
	Depth	mm (in.)	630 (24 - 26 / 32)	340 (13 - 12 / 32)	
Package dimensions	Height	mm (in.)	358 (14 - 3 / 32)	826 (32 - 17 / 32)	
	Width	mm (in.)	1,191 (46 - 28 / 32)	1,016 (40)	
	Depth	mm (in.)	783 (30 - 26 / 32)	416 (16 - 12 / 32)	
Net weight		kg (lb.)	32 (71)	67 (148)	
Shipping weight		kg (lb.)	37 (82)	73 (161)	
Shipping volume		m^3 (cu. ft)	0.334 (11.8)	0.349 (12.3)	

DATA SUBJECT TO CHANGE WITHOUT NOTICE.

Cooling:
Rating conditions (*): Indoor air temperature 27 °C DB / 19 °C WB, Outdoor air temperature 35 °C DB
Full load conditions (**): Indoor air temperature 32 °C DB / 23 °C WB, Outdoor air temperature 43 °C DB

MODEL No.	Indoor Unit		AD436CW		
	Outdoor Unit		AER536SC3E		
POWER SOURCE			380 - 400 - 415 V / 3N / 50 Hz		
PERFORMANCE			Cooling		
Capacity		kW	10.6		
		BTU / h	36,000		
Air circulation (Hi / Me / Lo)		m^3/h	1,080 / 1,560 / 1,260		
Moisture removal (High)		Liters/h	4.2		
External static pressure (High)		mmAq(Pa)	79 (8.1) : at shipment, 122 (12.4) : using the booster cable		
ELECTRICAL RATINGS					
Voltage rating		VAC	380	400	415
Available voltage range		VAC	342 – 456		
Running amperes*		A	7.15	7.16	7.19
Max. running amperes**		A	8.01	8.02	8.04
Power input		kW	4.03	4.09	4.14
Power factor		%	86	83	80
C.O.P		W / W	2.63	2.59	2.56
Max. starting amperes		A	47	49	50
FEATURES					
Controls / Thermostat control			Microprocessor		
Timer			ON / OFF 12-hours		
Fan speeds Indoor / Outdoor			3 and Automatic control / 2 (Auto)		
Airflow direction (Indoor)			—		
Air filter			Field supply		
Remote controller (Option)			Wired : RCS-U251G		
Refrigerant control			Capillary tube		
Drain pump (Drain connection)			Max. head 75 cm above unit bottom (25A, OD32 mm)		
Compressor			Rotary (Sanyo)		
Operation sound	Indoor - Hi/Me/Lo	dB - A	38 / 33 / 31, (42 / 38 / 33 : using the booster cable)		
	Outdoor - Hi	dB - A	53		
Color (Approximate value)	Indoor		—		
	Outdoor		Munsell 6.96Y8.13 / 0.2, RAL 7035-GL		
REFRIGERANT TUBING					
Limit of tubing length		m (ft.)	50 (164)		
Limit of tubing length at shipment		m (ft.)	15 (49)		
Limit of elevation difference between the two units		m (ft.)	Outdoor unit is higher than indoor unit : 50 (164) Outdoor unit is lower than indoor unit : 30 (98)		
Refrigerant tube outer diameter	Narrow tube	mm (in.)	9.52 (3 / 8)		
	Wide tube	mm (in.)	19.05 (3 / 4)		
Refrigerant amount at shipment		kg	R407C - 4.0		
DIMENSIONS & WEIGHT			Indoor unit	Outdoor unit	
Unit dimensions	Height	mm (in.)	310 (12 - 7 / 32)	1,235 (48 - 20 / 32)	
	Width	mm (in.)	1,480 (58 - 9 / 32)	940 (37)	
	Depth	mm (in.)	630 (24 - 26 / 32)	340 (13 - 12 / 32)	
Package dimensions	Height	mm (in.)	358 (14 - 3 / 32)	1,326 (52 - 7 / 32)	
	Width	mm (in.)	1,671 (65 - 25 / 32)	1,016 (40)	
	Depth	mm (in.)	783 (30 - 26 / 32)	416 (16 - 12 / 32)	
Net weight		kg (lb.)	47 (104)	104 (229)	
Shipping weight		kg (lb.)	52 (115)	111 (245)	
Shipping volume		m^3 (cu. ft)	0.468 (16.5)	0.56 (19.8)	

DATA SUBJECT TO CHANGE WITHOUT NOTICE.

Cooling:
Rating conditions (*): Indoor air temperature 27 °C DB / 19 °C WB, Outdoor air temperature 35 °C DB
Full load conditions (**): Indoor air temperature 32 °C DB / 23 °C WB, Outdoor air temperature 43 °C DB

MODEL No.	Indoor Unit		AD436CW		
	Outdoor Unit		AER536SCL3E		
POWER SOURCE			380 - 400 - 415 V / 3N / 50 Hz		
PERFORMANCE			Cooling		
Capacity		kW	10.6		
		BTU / h	36,000		
Air circulation (Hi / Me / Lo)		m^3/h	1,800 / 1,560 / 1,260		
Moisture removal (High)		Liters/h	4.2		
External static pressure (High)		mmAq(Pa)	79 (8.1) : at shipment, 122 (12.4) : using the booster cable		
ELECTRICAL RATINGS					
Voltage rating		VAC	380	400	415
Available voltage range		VAC	342 – 456		
Running amperes*		A	7.15	7.16	7.19
Max. running amperes**		A	8.01	8.02	8.04
Power input		kW	4.03	4.09	4.14
Power factor		%	86	83	80
C.O.P		W / W	2.63	2.59	2.56
Max. starting amperes		A	47	49	50
FEATURES					
Controls / Thermostat control			Microprocessor		
Timer			ON / OFF 12-hours		
Fan speeds Indoor / Outdoor			3 and Automatic control / 3 (Auto)		
Airflow direction (Indoor)			—		
Air filter			Field supply		
Remote controller (Option)			Wired : RCS-U251G		
Refrigerant control			Capillary tube		
Drain pump (Drain connection)			Max. head 75 cm above unit bottom (25A, OD32 mm)		
Compressor			Rotary (Sanyo)		
Operation sound	Indoor - Hi/Me/Lo	dB - A	38 / 33 / 31, (42 / 38 / 33 : using the booster cable)		
	Outdoor - Hi	dB - A	53		
Color (Approximate value)	Indoor		—		
	Outdoor		Munsell 6.96Y8.13 / 0.2, RAL 7035-GL		
REFRIGERANT TUBING					
Limit of tubing length		m (ft.)	50 (164)		
Limit of tubing length at shipment		m (ft.)	15 (49)		
Limit of elevation difference between the two units		m (ft.)	Outdoor unit is higher than indoor unit : 50 (164) Outdoor unit is lower than indoor unit : 30 (98)		
Refrigerant tube outer diameter	Narrow tube	mm (in.)	9.52 (3 / 8)		
	Wide tube	mm (in.)	19.05 (3 / 4)		
Refrigerant amount at shipment		kg	R407C - 4.0		
DIMENSIONS & WEIGHT			Indoor unit	Outdoor unit	
Unit dimensions	Height	mm (in.)	310 (12 - 7 / 32)	1,235 (48 - 20 / 32)	
	Width	mm (in.)	1,480 (58 - 9 / 32)	940 (37)	
	Depth	mm (in.)	630 (24 - 26 / 32)	340 (13 - 12 / 32)	
Package dimensions	Height	mm (in.)	358 (14 - 3 / 32)	1,326 (52 - 7 / 32)	
	Width	mm (in.)	1,671 (65 - 25 / 32)	1,016 (40)	
	Depth	mm (in.)	783 (30 - 26 / 32)	416 (16 - 12 / 32)	
Net weight		kg (lb.)	47 (104)	104 (229)	
Shipping weight		kg (lb.)	52 (115)	111 (245)	
Shipping volume		m^3 (cu. ft)	0.468 (16.5)	0.56 (19.8)	

DATA SUBJECT TO CHANGE WITHOUT NOTICE.

Cooling:
Rating conditions (*): Indoor air temperature 27 °C DB / 19 °C WB, Outdoor air temperature 35 °C DB
Full load conditions (**): Indoor air temperature 32 °C DB / 23 °C WB, Outdoor air temperature 43 °C DB

MODEL No.	Indoor Unit		AD448CW		
	Outdoor Unit		AER548SC3E		
POWER SOURCE			380 - 400 - 415 V / 3N / 50 Hz		
PERFORMANCE			Cooling		
Capacity		kW	12.6		
		BTU / h	43,000		
Air circulation (Hi / Me / Lo)		m^3/h	1,980 / 1,800 / 1,500		
Moisture removal (High)		Liters/h	5.4		
External static pressure (High)		mmAq(Pa)	78 (8.0) : at shipment, 113 (11.5) : using the booster cable		
ELECTRICAL RATINGS					
Voltage rating		VAC	380	400	415
Available voltage range		VAC	342 – 456		
Running amperes*		A	8.49	8.49	8.51
Max. running amperes**		A	9.62	9.62	9.63
Power input		kW	4.71	4.76	4.79
Power factor		%	84	81	78
C.O.P		W / W	2.68	2.65	2.63
Max. starting amperes		A	53	56	58
FEATURES					
Controls / Thermostat control			Microprocessor		
Timer			ON / OFF 12-hours		
Fan speeds Indoor / Outdoor			3 and Automatic control / 2 (Auto)		
Airflow direction (Indoor)			—		
Air filter			Field supply		
Remote controller (Option)			Wired : RCS-U251G		
Refrigerant control			Capillary tube		
Drain pump (Drain connection)			Max. head 75 cm above unit bottom (25A, OD32 mm)		
Compressor			Rotary (Sanyo)		
Operation sound	Indoor - Hi/Me/Lo	dB - A	40 / 37 / 33, (44 / 40 / 37 : using the booster cable)		
	Outdoor - Hi	dB - A	55		
Color (Approximate value)	Indoor		—		
	Outdoor		Munsell 6.96Y8.13 / 0.2, RAL 7035-GL		
REFRIGERANT TUBING					
Limit of tubing length		m (ft.)	50 (164)		
Limit of tubing length at shipment		m (ft.)	15 (49)		
Limit of elevation difference between the two units		m (ft.)	Outdoor unit is higher than indoor unit : 50 (164) Outdoor unit is lower than indoor unit : 30 (98)		
Refrigerant tube outer diameter	Narrow tube	mm (in.)	9.52 (3 / 8)		
	Wide tube	mm (in.)	19.05 (3 / 4)		
Refrigerant amount at shipment		kg	R407C - 4.3		
DIMENSIONS & WEIGHT			Indoor unit	Outdoor unit	
Unit dimensions	Height	mm (in.)	310 (12 - 7 / 32)	1,235 (48 - 20 / 32)	
	Width	mm (in.)	1,480 (58 - 9 / 32)	940 (37)	
	Depth	mm (in.)	630 (24 - 26 / 32)	340 (13 - 12 / 32)	
Package dimensions	Height	mm (in.)	358 (14 - 3 / 32)	1,326 (52 - 7 / 32)	
	Width	mm (in.)	1,671 (65 - 25 / 32)	1,016 (40)	
	Depth	mm (in.)	783 (30 - 26 / 32)	416 (16 - 12 / 32)	
Net weight		kg (lb.)	47 (104)	106 (234)	
Shipping weight		kg (lb.)	52 (115)	113 (249)	
Shipping volume		m^3 (cu. ft)	0.468 (16.5)	0.56 (19.8)	

DATA SUBJECT TO CHANGE WITHOUT NOTICE.

Cooling:
Rating conditions (*): Indoor air temperature 27 °C DB / 19 °C WB, Outdoor air temperature 35 °C DB
Full load conditions (**): Indoor air temperature 32 °C DB / 23 °C WB, Outdoor air temperature 43 °C DB

MODEL No.	Indoor Unit		AD448CW		
	Outdoor Unit		AER548SCL3E		
POWER SOURCE			380 - 400 - 415 V / 3N / 50 Hz		
PERFORMANCE			Cooling		
Capacity		kW	12.6		
		BTU / h	43,000		
Air circulation (Hi / Me / Lo)		m^3/h	1,980 / 1,800 / 1,500		
Moisture removal (High)		Liters/h	5.4		
External static pressure (High)		mmAq(Pa)	78 (8.0) : at shipment, 113 (11.5) : using the booster cable		
ELECTRICAL RATINGS					
Voltage rating		VAC	380	400	415
Available voltage range		VAC	342 – 456		
Running amperes*		A	8.49	8.49	8.51
Max. running amperes**		A	9.62	9.62	9.63
Power input		kW	4.71	4.76	4.79
Power factor		%	84	81	78
C.O.P		W / W	2.68	2.65	2.63
Max. starting amperes		A	53	56	58
FEATURES					
Controls / Thermostat control			Microprocessor		
Timer			ON / OFF 12-hours		
Fan speeds Indoor / Outdoor			3 and Automatic control / 3 (Auto)		
Airflow direction (Indoor)			—		
Air filter			Field supply		
Remote controller (Option)			Wired : RCS-U251G		
Refrigerant control			Capillary tube		
Drain pump (Drain connection)			Max. head 75 cm above unit bottom (25A, OD32 mm)		
Compressor			Rotary (Sanyo)		
Operation sound	Indoor - Hi/Me/Lo	dB - A	40 / 37 / 33, (44 / 40 / 37 : using the booster cable)		
	Outdoor - Hi	dB - A	55		
Color (Approximate value)	Indoor		—		
	Outdoor		Munsell 6.96Y8.13 / 0.2, RAL 7035-GL		
REFRIGERANT TUBING					
Limit of tubing length		m (ft.)	50 (164)		
Limit of tubing length at shipment		m (ft.)	15 (49)		
Limit of elevation difference between the two units		m (ft.)	Outdoor unit is higher than indoor unit : 50 (164) Outdoor unit is lower than indoor unit : 30 (98)		
Refrigerant tube outer diameter	Narrow tube	mm (in.)	9.52 (3 / 8)		
	Wide tube	mm (in.)	19.05 (3 / 4)		
Refrigerant amount at shipment		kg	R407C - 4.3		
DIMENSIONS & WEIGHT			Indoor unit	Outdoor unit	
Unit dimensions	Height	mm (in.)	310 (12 - 7 / 32)	1,235 (48 - 20 / 32)	
	Width	mm (in.)	1,480 (58 - 9 / 32)	940 (37)	
	Depth	mm (in.)	630 (24 - 26 / 32)	340 (13 - 12 / 32)	
Package dimensions	Height	mm (in.)	358 (14 - 3 / 32)	1,326 (52 - 7 / 32)	
	Width	mm (in.)	1,671 (65 - 25 / 32)	1,016 (40)	
	Depth	mm (in.)	783 (30 - 26 / 32)	416 (16 - 12 / 32)	
Net weight		kg (lb.)	47 (104)	106 (234)	
Shipping weight		kg (lb.)	52 (115)	113 (249)	
Shipping volume		m^3 (cu. ft)	0.468 (16.5)	0.56 (19.8)	

DATA SUBJECT TO CHANGE WITHOUT NOTICE.

Cooling:
Rating conditions (*): Indoor air temperature 27 °C DB / 19 °C WB, Outdoor air temperature 35 °C DB
Full load conditions (**): Indoor air temperature 32 °C DB / 23 °C WB, Outdoor air temperature 43 °C DB

1-2 Major Component Specifications

(A) Indoor Unit

MODEL No.		AS425C
Source		220 - 230 - 240 V / 1 phase / 50Hz
Remote Controller (Accessory)		RCS - 5PS3E
Controller P.C.B. Ass'y		CR - X363GS
Switch Ass'y		SW - X363GS
Fan (Number…diameter)	mm	Turbo (1 … ø 490)
Fan motor		
Model…Nominal output	W	SFG6X - 41A5P … 40 W
Source		220 - 230 - 240 V / 1 phase / 50 Hz
No. of pole…r.p.m. (230 V, High)	rpm	6 … 470
Coil resistance (Ambient temperature 20°C)	Ω	BRN – WHT : 114.0 , ORG – YEL : 66.4 WHT – VLT : 23.9 , WHT – PNK : 77.4 VLT – ORG : 12.4 , YEL – BLK : 82.1
Safety device		
Operating temperature	Open °C	130 ± 8 °C
	Close °C	79 ± 15 °C
Run capacitor	VAC, μF	440 V, 4 μF
Heat exchanger		
Coil		Aluminum plate fin / Copper tube
Rows…fin pitch	mm	2… 1.7
Face area	m^2	0.295
Panel		
Model No.		PNR - X253GS
Indicator Lamp Ass'y		IND - X253GS
Dew proof heater		240 V, 26 W
Auto louver moter		M2LB24ZA12
Auto louver motor…Rated	V, W, rpm	240 VAC, 3 W, 2.5 rpm
Coil resistance (at 25°C)	Ω	15.620 Ω ± 15 %

(A) Indoor Unit

MODEL No.		AS436C	AS448C
Source		220 - 230 - 240 V / 1 phase / 50Hz	
Remote controller (Accessory)		REM CLR A	
Controller P.C.B. Ass'y		CR - X363GS	
Switch ass'y		SW - X363GS	
Fan (Number…diameter)	mm	Turbo (1 … ø 490)	
Fan motor			
Model…Nominal output	W	SFG6X - 61A3P … 60 W	
Source		220 - 230 - 240 V / 1 phase / 50 Hz	
No. of pole…r.p.m. (230 V, High)	rpm	6 … 530	
Coil resistance (Ambient temperature 20°C)	Ω	BRN – WHT : 71.1 , ORG – YEL : 22.7 WHT – VLT : 8.7 , VLT – PNK : 43.2 VLT – ORG : 13.3 , YEL – BLK : 54.32	
Safety device			
Operating temperature	Open °C	130 ± 8 °C	
	Close °C	79 ± 15 °C	
Run capacitor	VAC, μF	440 V, 6 μF	
Heat exchanger			
Coil		Aluminum plate fin / Copper tube	
Rows…fin pitch	mm	2… 1.7	
Face area	m^2	0.479	
Panel			
Model No.		PNR - X483GS	
Indicator Lamp ass'y		IND - X483GS	
Dew proof heater		240 V, 31 W	
Auto louver moter		M2LB24ZA12	
Auto louver motor…Rated	V, W, rpm	240 VAC, 3 W, 2.5 rpm	
Coil resistance (at 25°C)	Ω	15.620 Ω ± 15 %	

(A) Indoor Unit

MODEL No.		**AC425C**	
Source		220 - 230 - 240 V / 1 phase / 50Hz	
Remote Controller (Accessory)		REM CLR A	
Controller P.C.B. Ass'y		CR - X363GS	
Switch Ass'y		–	SW - X363GS
Fan (Number…diameter)	mm	Centrifugal (4 … ø 130)	
Fan motor			
Model…Nominal output	W	SR4X - 51A6P … 50 W	
Source		220 - 230 - 240 V / 1 phase / 50 Hz	
No. of pole…r.p.m. (230 V, High)	rpm.	4 … 1,172	
Coil resistance (Ambient temperature 20°C)	Ω	BRN – WHT : 111.0 , ORG – YEL : 16.7 WHT – VLT : 35.4 , YEL – BLK : 136.6 VLT – ORG : 13.4 , BLK – PNK : 23.9	
Safety device			
Operating temperature	Open °C	130 ± 8 °C	
	Close °C	(79 ± 15)	
Run capacitor	VAC, μF	440 V, 1.5 μF	
Heat exchanger			
Coil		Aluminum plate fin / Copper tube	
Rows…fin pitch	mm	3… 1.7	
Face area	m^2	0.168	
Auto louver motor		MT8 - 3C	
Auto louver motor…Rated	V, Hz, W, rpm.	220 - 240 VAC, 50Hz, 3 W, 3.3 rpm	
Coil resistance (at 25°C)	Ω	16.430 Ω ± 8 %	

(A) Indoor Unit

MODEL No.		**AC436C**	
Source		220 - 230 - 240 V / 1 phase / 50Hz	
Remote Controller (Accessory)		REM CLR A	
Controller P.C.B. Ass'y		CR - X363GS	
Switch Ass'y		–	SW - X363GS
Fan (Number…diameter)	mm	Centrifugal (4 … ø 150)	
Fan motor			
Model…Nominal output	W	KFG4X - 101C6P … 100 W	
Source		220 - 230 - 240 V / 1 phase / 50 Hz	
No. of pole…r.p.m. (230 V, High)	rpm.	4 … 1,015	
Coil resistance (Ambient temperature 20°C)	Ω	BRN – WHT : 61.05 , ORG – YEL : 13.23 WHT – VLT : 9.955 , YEL – BLK : 19.25 VLT – ORG : 9.576 , BLK – PNK : 10.81	
Safety device			
Operating temperature	Open °C	130 ± 8	
	Close °C	(79 ± 15)	
Run capacitor	VAC, μF	440 V, 4.0 μF	
Heat exchanger			
Coil		Aluminum plate fin / Copper tube	
Rows…fin pitch	mm	3… 1.7	
Face area	m^2	0.326	
Auto louver motor		MT8 - 3C	
Auto louver motor…Rated	V, Hz, W, rpm.	220 - 240 VAC, 50Hz, 3 W, 3.3 rpm	
Coil resistance (at 25°C)	Ω	16.430 Ω ± 8 %	

(A) Indoor Unit

MODEL No.		**AC448C**	
Source		220 - 230 - 240 V / 1 phase / 50Hz	
Remote Controller (Accessory)		REM CLR A	
Controller P.C.B. Ass'y		CR - X363GS	
Switch Ass'y		–	SW - X363GS
Fan (Number…diameter)	mm	Centrifugal (4 … ø 150)	
Fan motor			
Model…Nominal output	W	KFG4X - 101C6P … 100 W	
Source		220 - 230 - 240 V / 1 phase / 50 Hz	
No. of pole…r.p.m. (230 V, High)	rpm.	4 … 1,070	
Coil resistance (Ambient temperature 20°C)	Ω	BRN – WHT : 61.05 , ORG – YEL : 13.23 WHT – VLT : 9.955 , YEL – BLK : 19.25 VLT – ORG : 9.576 , BLK – PNK : 10.81	
Safety device			
Operating temperature	Open °C	130 ± 8	
	Close °C	(79 ± 15)	
Run capacitor	VAC, μF	440 V, 5.0 μF	
Heat exchanger			
Coil		Aluminum plate fin / Copper tube	
Rows…fin pitch	mm	3… 1.7	
Face area	m^2	0.326	
Auto louver motor		MT8 - 3C	
Auto louver motor…Rated	V, Hz, W, rpm.	220 - 240 VAC, 50Hz, 3 W, 3.3 rpm	
Coil resistance (at 25°C)	Ω	16.430 Ω ± 8 %	

(A) Indoor Units

MODEL No.		AD425CW
Source		220 - 230 - 240 V / 1 phase / 50Hz
Controller P.C.B. Ass'y		CR-X363GS (Microprocessor)
Fan (Number…diameter)	mm	Centrifugal (2 … ø 190)
Fan motor		
Model…Nominal output	W	KFG4X-71B5P … 70 W
Source		220 - 230 - 240 V / 1 phase / 50 Hz
No. of pole…r.p.m. (230 V, High)	rpm.	4 … 1,063
Coil resistance (Ambient temperature 20°C)	Ω	BRN – WHT : 74.72 ORG – YEL : 9.588 WHT – VLT : 19.14 YEL – BLK : 10.52 VLT – ORG : 10.52 BLK – PNK : 21.72
Safety device		
Operating temperature	Open °C	130 ± 5
	Close °C	(115 ± 5)
Run capacitor	VAC, μF	450 VAC, 5 μF
Heat exchanger		
Coil		Aluminum plate fin / Copper tube
Rows…fin pitch	mm	3… 1.7
Face area	m^2	0.189
Drain pump		PJV-1422
Rated	VAC, W	AC 230 V, 50 Hz, 12 W
Total head & capacity		500 mm, 400 cc/min

(A) Indoor Units

MODEL No.		AD436CW
Source		220 - 230 - 240 V / 1 phase / 50Hz
Controller P.C.B. Ass'y		CR-X363GS (Microprocessor)
Fan (Number…diameter)	mm	Centrifugal (3 … ø 190)
Fan motor		
Model…Nominal output	W	KFC4X-141A5P…160 W
Source		220 - 230 - 240 V / 1 phase / 50 Hz
No. of pole…r.p.m. (230 V, High)	rpm.	4 … 1,207
Coil resistance (Ambient temperature 20°C)	Ω	BRN – WHT : 25.79 WHT – VLT : 5.086 VLT – ORG : 8.626 ORG – YEL : 5.792 YEL – BLK : 6.746 PNK – VLT : 6.361
Safety device		
Operating temperature	Open °C	130 ± 5
	Close °C	(115 ± 5)
Run capacitor	VAC, μF	450 VAC, 6 μF
Heat exchanger		
Coil		Aluminum plate fin / Copper tube
Rows…fin pitch	mm	3… 2.0
Face area	m^2	0.308
Drain pump		PJV-1422
Rated	VAC, W	AC 230 V, 50 Hz, 12 W
Total head & capacity		500 mm, 400 cc/min

(A) Indoor Units

MODEL No.		AD448CW
Source		220 - 230 - 240 V / 1 phase / 50Hz
Controller P.C.B. Ass'y		CR-X363GS (Microprocessor)
Fan (Number…diameter)	mm	Centrifugal (3 … ø 190)
Fan motor		
Model…Nominal output	W	KFC4X-141A5P…160 W
Source		220 - 230 - 240 V / 1 phase / 50 Hz
No. of pole…r.p.m. (230 V, High)	rpm.	4 … 1,207
Coil resistance (Ambient temperature 20°C)	Ω	BRN – WHT : 25.79 WHT – VLT : 5.086 VLT – ORG : 8.626 ORG – YEL : 5.792 YEL – BLK : 6.746 ORG – VLT : 6.361
Safety device		
Operating temperature	Open °C	130 ± 5
	Close °C	(115 ± 5)
Run capacitor	VAC, μF	450 VAC, 8 μF
Heat exchanger		
Coil		Aluminum plate fin / Copper tube
Rows…fin pitch	mm	3… 2.0
Face area	m^2	0.308
Drain pump		PJV-1422
Rated	VAC, W	AC 230 V, 50 Hz, 12 W
Total head & capacity		500 mm, 400 cc/min

1-2 Major Component Specifications

(B) Outdoor Unit

MODEL No.			AER525SCE
Source			**220 - 230 - 240 V / 1 phase / 50 Hz**
Controller P.C.B. Ass'y			–
Control circuit fuse			–
Compressor			Rotary (Hermetic)
Model ..... number			C - RN220H5B
Source			220 - 240 V / 1 phase / 50 Hz
Nominal output		W	2200
Compressor oil		cc	1500
Coil resistance (Ambient temperature 25 °C)		Ω	C – R : 0.76 , R – S : 3.52 C – S : 2.76
Safety devices			
Overload relay models			Internal type
Operating temperature	Open	°C	160 ± 5
	Close	°C	87 ± 11
Crank case heater			–
Refrigerant amount at shipment		kg	R407C - 2.4
High pressure switch			ACB - 1TB07
Set pressure	OFF	kg/cm²	$32^{+0}_{-1.5}$ ($3.2^{+0}_{-0.15}$ MPa)
	ON	kg/cm²	24 ± 2.0 (2.4 ± 0.2 MPa)
Fan			Propeller
Number...diameter		mm	1 ..... ø460
Fan motor			
Model			KFC6T - 91C5P
Source			220 - 230 - 240 V / 1 phase / 50 Hz
No. of pole ..... rpm (230V, High / Med. / Low)			6...772 / 376 / 252
Nominal output		W	70
Coil resistance (Ambient temperature 20°C)		Ω	WHT – BRN : 127.3 , VLT – YEL : 15.0 WHT – VLT : 56.7 , YEL – PNK : 7.2
Safety device			Internal type
Operating temperature	Open	°C	130 ± 8
	Close	°C	79 ± 15
Run capacitor	VAC,	µF	450 V, 6 µF
Heat exchange			
Coil			Aluminium plate fin / Copper tube
Rows ..... fin pitch		mm	2 ..... 1.8
Face area		m²	0.616

1-2 Major Component Specifications

(B) Outdoor Unit

MODEL No.			AER525SC3E
Source			**380 - 400 - 415 V / 3 phase / 50 Hz**
Controller P.C.B. Ass'y			–
Control circuit fuse			–
Compressor			Rotary (Hermetic)
Model ..... number			C - RN223H8D
Source			380 - 400 - 415 V / 3 phase / 50 Hz
Nominal output		W	2400
Compressor oil		cc	1350
Coil resistance (Ambient temperature 25 °C)		Ω	T – R : 5.77 , R – S : 5.66 S – T : 5.38
Safety devices			
Overload relay models			Internal type
Operating temperature	Open	°C	120 ± 5
	Close	°C	98 ± 11
Crank case heater			–
Refrigerant amount at shipment		kg	R407C - 2.4
High pressure switch			ACB - 1TB07
Set pressure	OFF	kg/cm²	$32^{+0}_{-1.5}$ ($3.2^{+0}_{-0.15}$ MPa)
	ON	kg/cm²	24 ± 2.0 (2.4 ± 0.2 MPa)
Fan			Propeller
Number...diameter		mm	1 ..... ø460
Fan motor			
Model			KFC6T - 91C5P
Source			220 - 230 - 240 V / 1 phase / 50 Hz
No. of pole ..... rpm (230V, High / Med. / Low)			6...772 / 376 / 252
Nominal output		W	70
Coil resistance (Ambient temperature 20°C)		Ω	WHT – BRN : 127.3 , VLT – YEL : 15.0 WHT – VLT : 56.7 , YEL – PNK : 7.2
Safety device			Internal type
Operating temperature	Open	°C	130 ± 8
	Close	°C	79 ± 15
Run capacitor	VAC,	µF	450 V, 6 µF
Heat exchange			
Coil			Aluminium plate fin / Copper tube
Rows ..... fin pitch		mm	2 ..... 1.8
Face area		m²	0.616

1-2 Major Component Specifications

(B) Outdoor Unit

MODEL No.			AER525SCL3E
Source			**380 - 400 - 415 V / 3 phase / 50 Hz**
Controller P.C.B. Ass'y			CR - CR254GL8 (Microprocessor)
Control circuit fuse			250 V, 3.15 A
Compressor			Rotary (Hermetic)
Model ..... number			C - RN223H8D
Source			380 - 400 - 415 V / 3 phase / 50 Hz
Nominal output		W	2400
Compressor oil		cc	1350
Coil resistance (Ambient temperature 25 °C)		Ω	T – R : 5.77 , R – S : 5.66 S – T : 5.38
Safety devices			
Overload relay models			Internal type
Operating temperature	Open	°C	120 ± 5
	Close	°C	98 ± 11
Crank case heater			240V, 25W
Refrigerant amount at shipment		kg	R407C - 3.0
High pressure switch			ACB - 1TB07
Set pressure	OFF	kg/cm²	$32^{+0}_{-1.5}$ ($3.2^{+0}_{-0.15}$ MPa)
	ON	kg/cm²	24 ± 2.0 (2.4 ± 0.2 MPa)
Fan			Propeller
Number...diameter		mm	1 ..... ø460
Fan motor			
Model			KFC6T - 91C5P
Source			220 - 230 - 240 V / 1 phase / 50 Hz
No. of pole ..... rpm (230V, High / Med. / Low)			6...772 / 376 / 252
Nominal output		W	70
Coil resistance (Ambient temperature 20°C)		Ω	WHT – BRN : 127.3 , VLT – YEL : 15.0 WHT – VLT : 56.7 , YEL – PNK : 7.2
Safety device			Internal type
Operating temperature	Open	°C	130 ± 8
	Close	°C	79 ± 15
Run capacitor	VAC,	µF	450 V, 6 µF
Heat exchange			
Coil			Aluminium plate fin / Copper tube
Rows ..... fin pitch		mm	2 ..... 1.8
Face area		m²	0.616

1-2 Major Component Specifications

(B) Outdoor Unit

MODEL No.			AER536SC3E	AER548SC3E
Source			**380 - 400 - 415 V / 3 phase / 50 Hz**	
Controller P.C.B. Ass'y			–	
Control circuit fuse			–	
Compressor			Scroll (Hermetic)	
Model ..... number			C - SBN303H8A	C - SBN373H8A
Source			380 - 400 - 415 V / 3 phase / 50 Hz	
Nominal output		W	2,400	3,700
Compressor oil		cc	1,700	1,700
Coil resistance (Ambient temperature 25 °C)		Ω	T – R : 3.177 , R – S : 3.177 S – T : 2.966	T – R : 2.806 , R – S : 2.806 S – T : 2.651
Crank case heater			–	–
Safety devices				
Overload relay models			Internal type	
Operating temperature	Open	°C	155 ± 5	145 ± 5
	Close	°C	61 ± 9	61 ± 9
Refrigerant amount at shipment		kg	R407C - 4.0	R407C - 4.3
High pressure switch			ACB - 1TB07	
Set pressure	OFF	kg/cm²	$32^{+0}_{-1.5}$ ($3.2^{+0}_{-0.15}$ Mpa)	
	ON	kg/cm²	24 ± 2.0 (2.4 ± 0.2 Mpa)	
Low pressure switch			LCB - JA89	
Set pressure	OFF	kg/cm²	0.5 ± 0.3 (0.05 ± 0.03 Mpa)	
	ON	kg/cm²	1.5 ± 0.3 (0.15 ± 0.03 Mpa)	
Fan			Propeller	
Number...diameter		mm	2 ..... ø460	
Fan motor				
Model			KFC6T - 91C5P × 2	
Source			220 - 230 - 240 V / 1 phase / 50 Hz	
No. of pole ..... rpm (230V, High / Med. / Low)			6...772 / 376 / 252	
Nominal output		W	70 W × 2	
Coil resistance (Ambient temperature 20°C)		Ω	BRN – WHT : 127.3 , VLT – YEL : 15.0 WHT – VLT : 56.7 , YEL – PNK : 7.2	
Safety device			Internal type	
Operating temperature	Open	°C	130 ± 8	
	Close	°C	79 ± 15	
Run capacitor	VAC,	µF	450 V, 6 µF × 2	
Heat exchange				
Coil			Aluminium plate fin / Copper tube	
Rows ..... fin pitch		mm	2 ..... 2.0	2 ..... 1.8
Face area		m²	1.08	

1-2 Major Component Specifications

(B) Outdoor Unit

MODEL No.			AER536SCL3E	AER548SCL3E
Source			**380 - 400 - 415 V / 3 phase / 50 Hz**	
Controller P.C.B. Ass'y			CR - CR254GL8 (Microprocessor)	
Control circuit fuse			250 V, 3.15 A	
Compressor			Scroll (Hermetic)	
Model ..... number			C - SBN303H8A	C - SBN373H8A
Source			380 - 400 - 415 V / 3 phase / 50 Hz	
Nominal output		W	2,400	3,700
Compressor oil		cc	1,700	1,700
Coil resistance (Ambient temperature 25 °C)		Ω	T – R : 3.177 , R – S : 3.177 S – T : 2.966	T – R : 2.806 , R – S : 2.806 S – T : 2.651
Crank case heater			240 V, 32 W	240 V, 32 W
Safety devices				
Overload relay models			Internal type	
Operating temperature	Open	°C	155 ± 5	145 ± 5
	Close	°C	61 ± 9	61 ± 9
Refrigerant amount at shipment		kg	R407C - 4.0	R407C - 4.3
High pressure switch			ACB - 1TB07	
Set pressure	OFF	kg/cm²	$32^{+0}_{-1.5}$ ($3.2^{+0}_{-0.15}$ Mpa)	
	ON	kg/cm²	24 ± 2.0 (2.4 ± 0.2 Mpa)	
Low pressure switch			LCB - JA89	
Set pressure	OFF	kg/cm²	0.5 ± 0.3 (0.05 ± 0.03 Mpa)	
	ON	kg/cm²	1.5 ± 0.3 (0.15 ± 0.03 Mpa)	
Fan			Propeller	
Number...diameter		mm	2 ..... ø460	
Fan motor				
Model			KFC6T - 91C5P × 2	
Source			220 - 230 - 240 V / 1 phase / 50 Hz	
No. of pole ..... rpm (230V, High / Med. / Low)			6...772 / 376 / 252	
Nominal output		W	70 W × 2	
Coil resistance (Ambient temperature 20°C)		Ω	BRN – WHT : 127.3 , VLT – YEL : 15.0 WHT – VLT : 56.7 , YEL – PNK : 7.2	
Safety device			Internal type	
Operating temperature	Open	°C	13**0** ± 8	
	Close	°C	79 ± 15	
Run capacitor	VAC,	µF	450 V, 6 µF × 2	
Heat exchange				
Coil			Aluminium plate fin / Copper tube	
Rows ..... fin pitch		mm	2 ..... 2.0	2 ..... 1.8
Face area		m²	1.08	

1-3 Other Component Specifications

(A) Indoor Unit

			AS425C	AS436C	AS448C
Power Transformer			ATR - I75A		
Rated	Primary		AC 230 V, 50 Hz		
	Secondary		10.6 V, 0.93 A		
	Capacity		9.85 VAC		
Coil resistance		Ω	WHT – WHT : 96.5 , BRN – BRN : 0.8 (at 20°C)		
Thermal cut off temperature		°C	150		
Thermistor (Coil sensor)			PBC - 41E - S26	PBC - 41E - S36	
Coil resistance		kΩ	–10 °C : 23.7 , 5 °C : 12.1 – 5 °C : 18.8 , 10 °C : 9.7 0 °C : 15.0 , 15 °C : 8.0		
Drain pump			WP20SL - 21		
Rated			AC 230 V, 14.7 W		
Float switch			FC - 0218 - 103		
Rated (Contact rated)			AC 230V, 50W		
Synchronized Moter			M2LB24ZA12		

			AS425C	AS436C	AS448C
Power Transformer			ATR - I75A		
Rated	Primary		AC 230 V, 50 Hz		
	Secondary		10.6 V, 0.93 A		
	Capacity		9.85 VAC		
Coil resistance		Ω	WHT – WHT : 96.5 , BRN – BRN : 0.8 (at 20°C)		
Thermal cut off temperature		°C	150		
Thermistor (Coil sensor)			PBC - 41E - S26	PBC - 41E - S36	
Coil resistance		kΩ	–10 °C : 23.7 , 5 °C : 12.1 – 5 °C : 18.8 , 10 °C : 9.7 0 °C : 15.0 , 15 °C : 8.0		
Thermistor (Room or coil sensor)			KTEC - 35 -S6		
Coil resistance		kΩ	0 °C : 16.5 , 40 °C : 2.7 5 °C : 12.8 , 45 °C : 2.2 10 °C : 10.0 , 50 °C : 1.8 20 °C : 6.3 , 55 °C : 1.5 30 °C : 4.0 ,		
Drain pump			WP20SL - 21		
Rated			AC 230 V, 14.7 W		
Float switch			FC - 0218 - 103		
Rated (Contact rated)			AC 230V, 50W		
Switch Ass'y			SW - X363GS		
Indicator Lamp Ass'y			IND - X253GS	IND - X363GS, X483GS	
Synchronized Moter			M2LB24ZA12		

(A) Indoor Unit

MODEL No.			AC425C	AC436C	AC448C
Power Transformer			ATR - I75B		
Rated	Primary		AC 230 V, 50 Hz		
	Secondary		10.6 V, 0.93 A		
	Capacity		9.86 VAC		
Coil resistance		Ω	WHT – WHT : 101 , BRN – BRN : 0.6 (at 20°C)		
Thermal cut off temperature		°C	150		
Thermistor (Coil sensor)			PBC - 41E - S14		
Coil resistance		kΩ	–10 °C : 23.7 , 5 °C : 12.1 – 5 °C : 18.8 , 10 °C : 9.7 0 °C : 15.0 , 15 °C : 8.0		
Synchronized Moter			MT8 - 3C		

MODEL No.			AC425C	AC436C	AC448C
Power Transformer			ATR - I75B		
Rated	Primary		AC 230 V, 50 Hz		
	Secondary		10.6 V, 0.93 A		
	Capacity		9.86 VAC		
Coil resistance		Ω	WHT – WHT : 101 , BRN – BRN : 0.6 (at 20°C)		
Thermal cut off temperature		°C	150		
Thermistor (Coil sensor)			PBC - 41E - S14		
Coil resistance		kΩ	–10 °C : 23.7 , 5 °C : 12.1 – 5 °C : 18.8 , 10 °C : 9.7 0 °C : 15.0 , 15 °C : 8.0		
Thermistor (Room or coil sensor)			KTEC - 35 -S6		
Coil resistance		kΩ	0 °C : 16.5 , 40 °C : 2.7 5 °C : 12.8 , 45 °C : 2.2 10 °C : 10.0 , 50 °C : 1.8 20 °C : 6.3 , 55 °C : 1.5 30 °C : 4.0 ,		
Switch Ass'y			SW - X363GS		
Indicator Lamp Ass'y			IND - T251GS		
Synchronized Moter			MT8 - 3C		

(A) Indoor Units

MODEL NO.	Indoor Unit	AD425CW - 448CW
Power Transformer		ATR - I75B
Rated		
Primary	VAC, Hz	230 V, 50Hz
Secondary		10.6 V, 0.93 A
		9.85 VAC
Coil resistance	Ω	WHT – WHT : 96.5 , BRN – BRN : 0.8
Thermal cut off temperature	°C	150
Thermistor (Coil sensor) : TH1		PBC - 41E - S36
Resistance	kΩ	–10 °C : 23.7 ± 5% , 5 °C : 12.1 ± 5% – 5 °C : 18.8 ± 5% , 10 °C : 9.7 ± 5% 0 °C : 15.0 ± 5% ,
Drain pump		PTV-1422
Rated		AC 230 V, 12 W
Float switch		FS-0218-103
Rated (Contact rated)		DC 12V, 25W

1-3 Other Component Specifications

(B) Outdoor Unit

MODEL No.		AER525SCE
Compressor Motor Mgnetic Contactor		FC - 1SZ607
Coil rated		AC 220 - 240 V, 50 Hz
Coil resistance (at 20°C)	Ω	828 ± 15 %
Contact rated	V, A	AC 440 V, 13A
Auxiliary relay		HH62S
Coil rated		AC 240 V, 50 Hz
Coil resistance (at 20°C)	kΩ	17.2
Contact rated	V, A	AC 220 V, 5A
Thermostat (Coil sensor)		YTB - S377
Operating Temperature	°C	27.5 ± 1.5 OFF (High) $25.5^{+1.5}_{-0.5}$ ON (Low)
Contact rated	A	AC 250 V, 1 A

(B) Outdoor Unit

MODEL No.		AER525SC3E	AER536SC3E	AER548SC3E
Compressor Motor Mgnetic Contactor		FW - 1SZ607A		
Coil rated		AC 220 - 240 V, 50 Hz		
Coil resistance (at 20°C)	Ω	828 ± 15 %		
Contact rated	V, A	AC 440 V, 13A		
Auxiliary relay		RDR - S400		
Coil rated		AC 240 V, 50 Hz		
Coil resistance (at 20°C)	kΩ	17.2		
Contact rated	V, A	AC 220 V, 5A		
Thermostat (Coil sensor)		YTB - S377		
Operating Temperature	°C	27.5 ± 1.5 OFF (High) $25.5^{+1.5}_{-0.5}$ ON (Low)		
Contact rated	A	AC 250 V, 1 A		

MODEL No.		AER525SCL3E	AER536SCL3E	AER548SCL3E
Compressor Motor Magnetic Contactor		FW - 1SZ607A		
Coil rated		AC 220 - 240 V, 50 Hz		
Coil resistance (at 20°C)	Ω	828 (at 20 °C)		
Contact rated	V, A	AC 440 V, 13 A		
Thermal Relay				
Contact rated	V, A	AC 220 V, 2.25 A		
Rated ampere (90 / 120%)	A	6 A, 110%	10 A, 90%	10 A, 110%
Auxiliary relay		HH62S		
Coil rated	A	AC 240 V, 50 Hz		
Coil resistance	kW	15.5 ± 20 %		
Contact rated	A	AC 250 V, 10A		
Thermostat (Coil sensor)		PBC - 41E - S26		
Operating Temperature	°C	29.0 or more (H) 18.0 or more (M) 10.0 or more (L) less than 10.0 (LL)	29.0 or more (H) 20.0 or more (M) 8.0 or more (L) less than 8.0 (LL)	27.0 or more (H) 12.0 or more (M) –2.0 or more (L) less than –2.0 (LL)

1-4 Dimensional Data

(A) Indoor Units : 4-Way Air Discharge Semi-concealed Type 25 Type

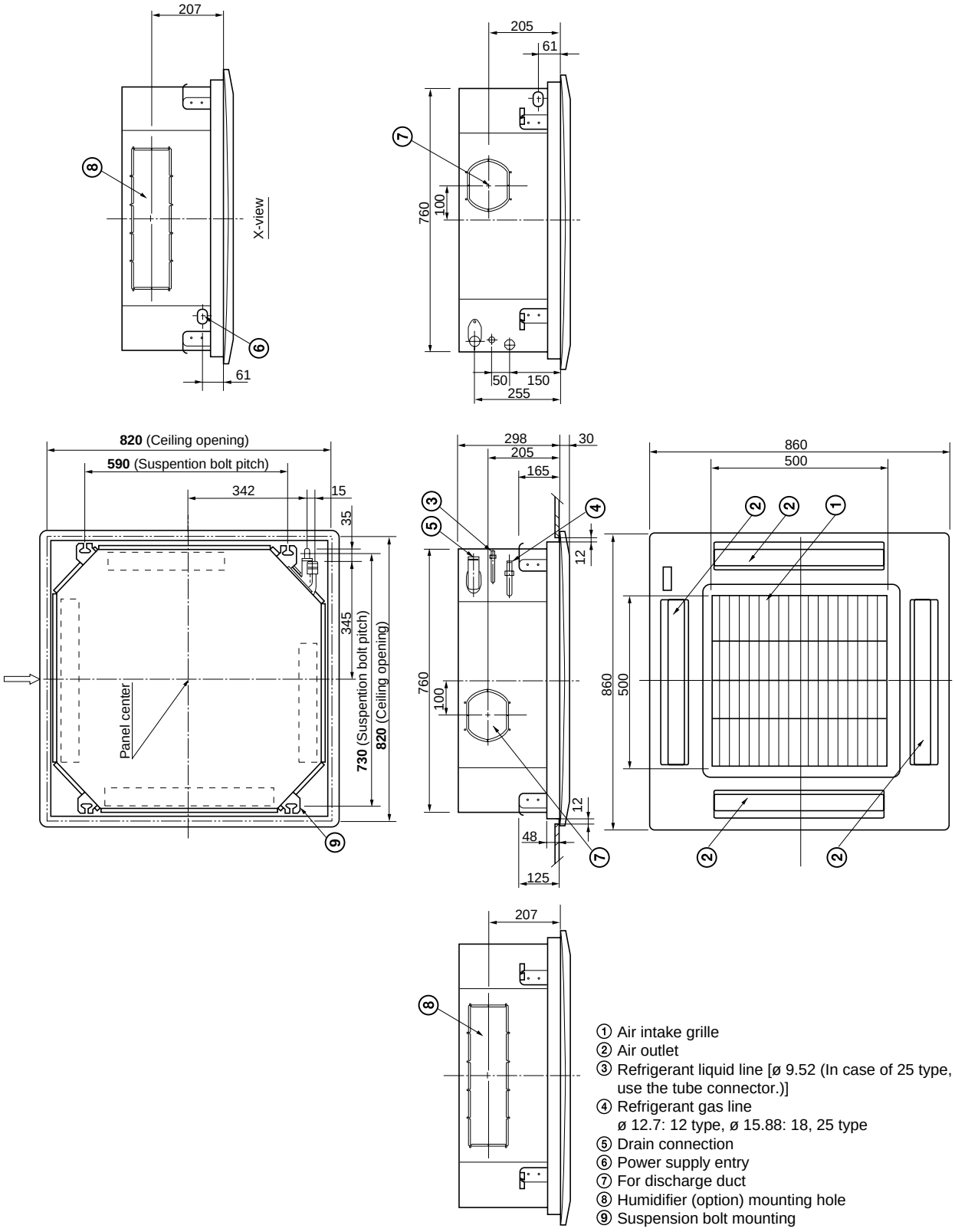

① Air intake grille
② Air outlet
③ Refrigerant liquid line [ø 9.52 (In case of 25 type, use the tube connector.)]
④ Refrigerant gas line
ø 12.7: 12 type, ø 15.88: 18, 25 type
⑤ Drain connection
⑥ Power supply entry
⑦ For discharge duct
⑧ Humidifier (option) mounting hole
⑨ Suspension bolt mounting

1488_X_I

(A) Indoor Units : 4-Way Air Discharge Semi-concealed Type
36, 48 Type

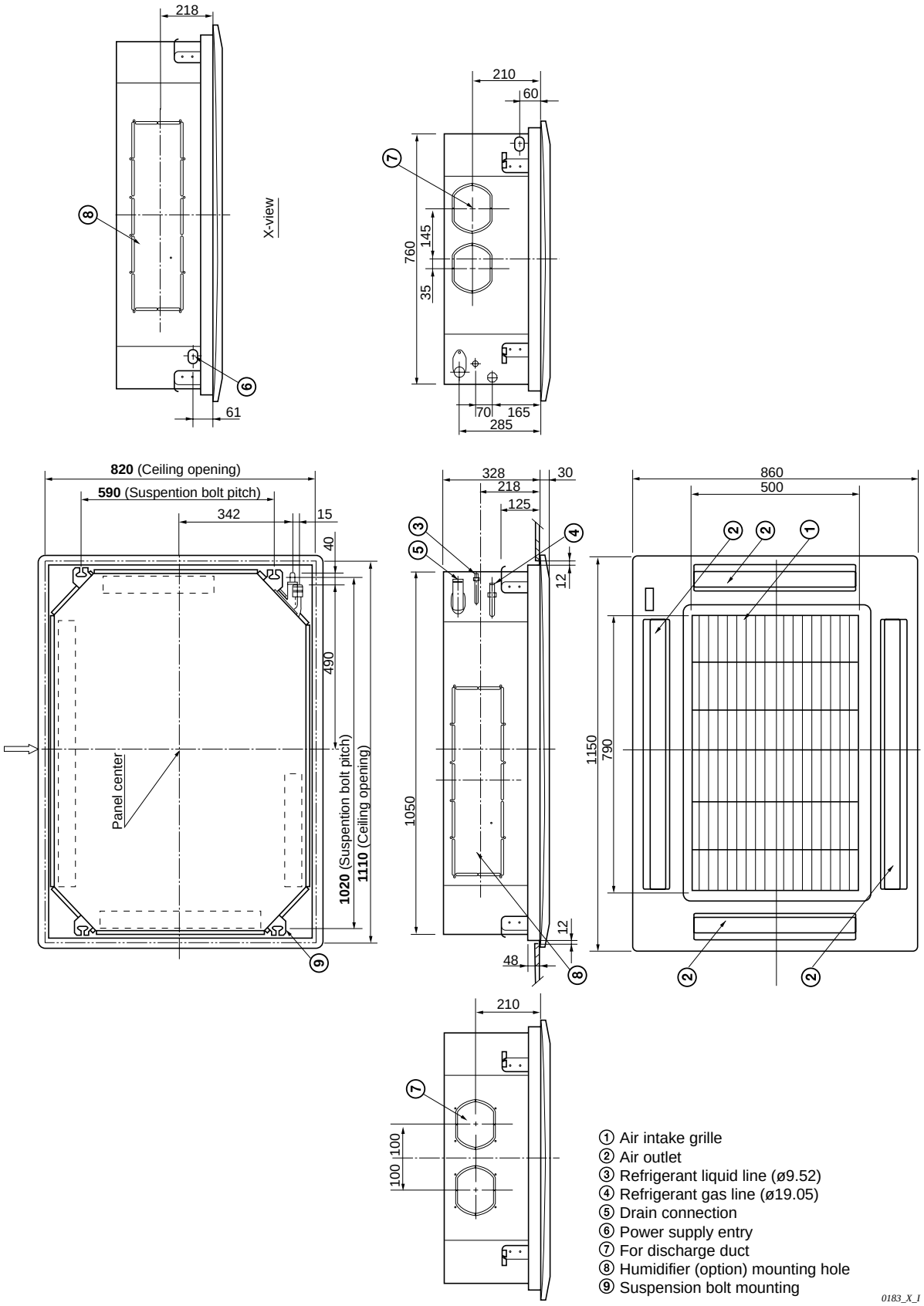

① Air intake grille
② Air outlet
③ Refrigerant liquid line (ø9.52)
④ Refrigerant gas line (ø19.05)
⑤ Drain connection
⑥ Power supply entry
⑦ For discharge duct
⑧ Humidifier (option) mounting hole
⑨ Suspension bolt mounting

0183_X_I

(A) Indoor Units : Ceiling Mounted Type
25, 36, 48 Type

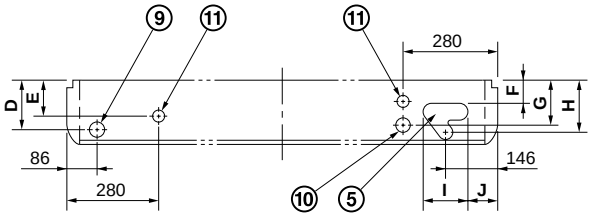

Holes in the rear unit (View from front)

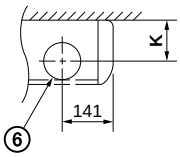

Hole for wall-through piping (View from front)

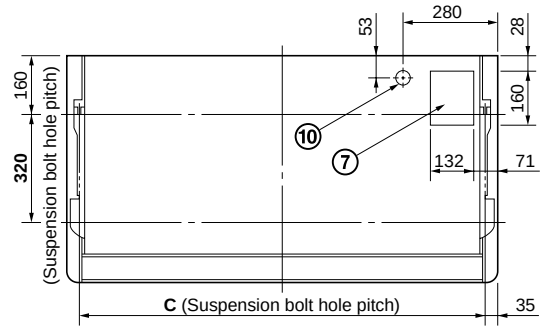

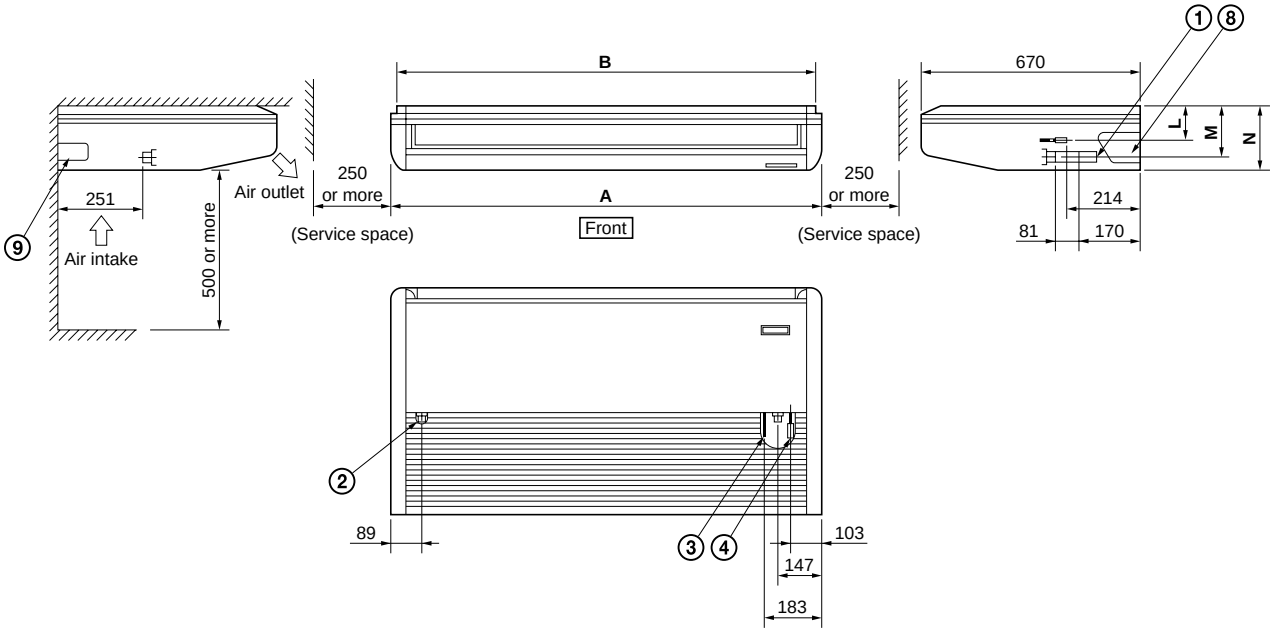

Dimension : mm

① Drain connection
② Drain connection for left side
③ Refrigerant liquid line (ø9.52)
④ Refrigerant gas line (18, 25 type: ø15.88 / 36, 48 type: ø19.05)
⑤ Hole for rear side refrigerant tubing
⑥ Hole for through-the-wall refrigerant tubing (ø100 hole)
⑦ Hole for upper side refrigerant tubing (Knockout hole)
⑧ Hole for right side refrigerant tubing (Knockout hole)
⑨ Hole for left side drain connection (Knockout hole)
⑩ Hole for power supply cord (Knockout hole ø40)
⑪ Hole for remote controller wiring

	A	B	C	D	E	F	G	H	I	J	K	L	M	N
25 type	1,300	1,280	1,230	147	101	64	134	147	116	83	120	95	147	190
36, 48 type	1,575	1,555	1,505	197	151	114	184	197	121	80	170	140	197	240

1394_X_S

(A) Indoor Units : Concealed Duct Type
25 Type

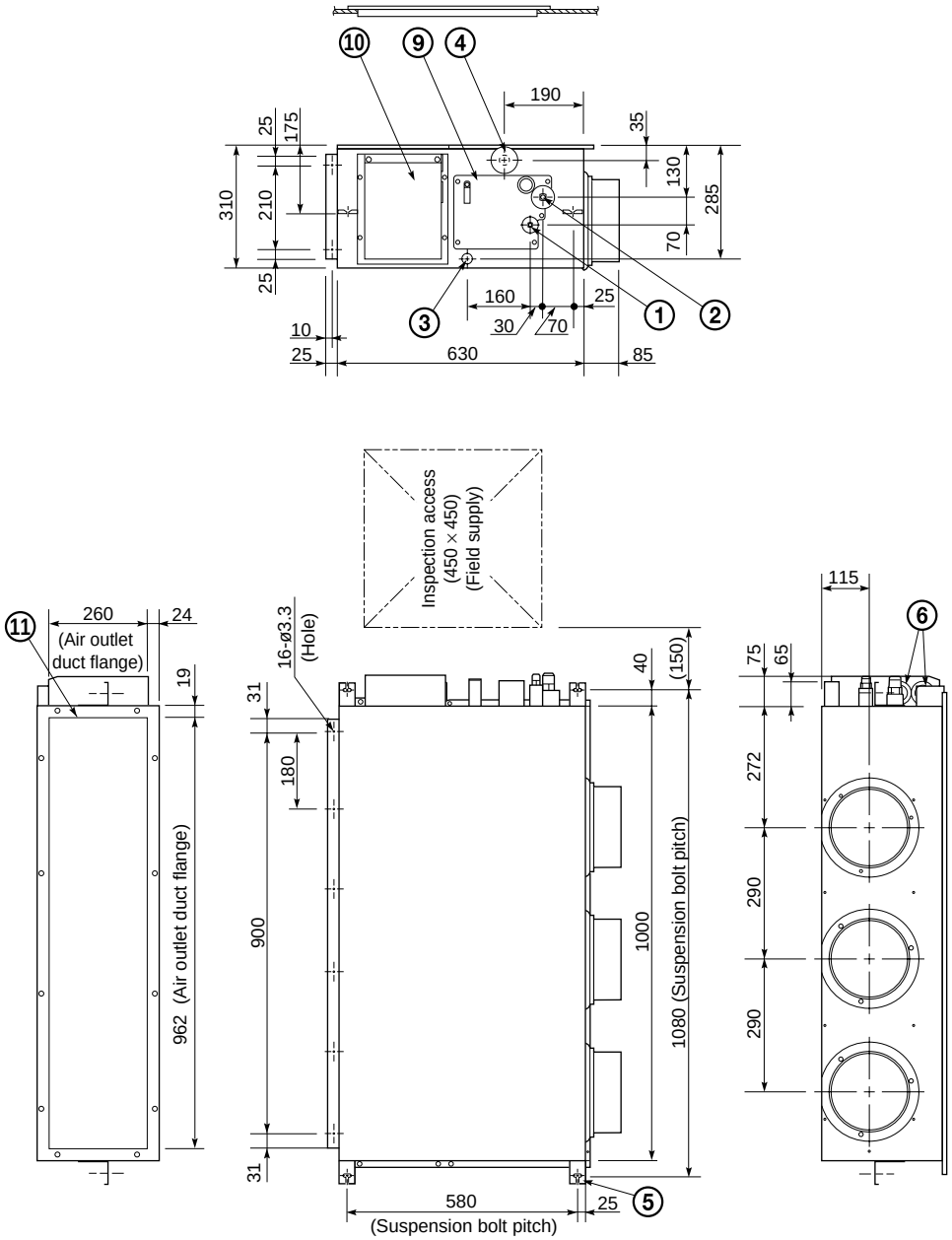

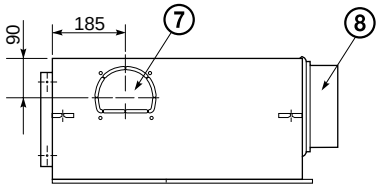

① Refrigerant liquid line ø9.52 (narrow tube)
(Use the tube connector)
② Refrigerant gas line ø15.88 (wide tube)
③ Upper drain port (O.D. 32 mm)
④ Bottom drain port (O.D. 26 mm)
⑤ Suspension lug
⑥ Power supply outlet (2-ø30)
⑦ Fresh air intake port (ø150)
⑧ Flange for the flexible air outlet duct (ø200)
⑨ Tube cover
⑩ Electrical component box
⑪ Flange for the air intake duct
(Option or field supply)

1731_U_I

(A) Indoor Units : Concealed Duct Type
36, 48 Type

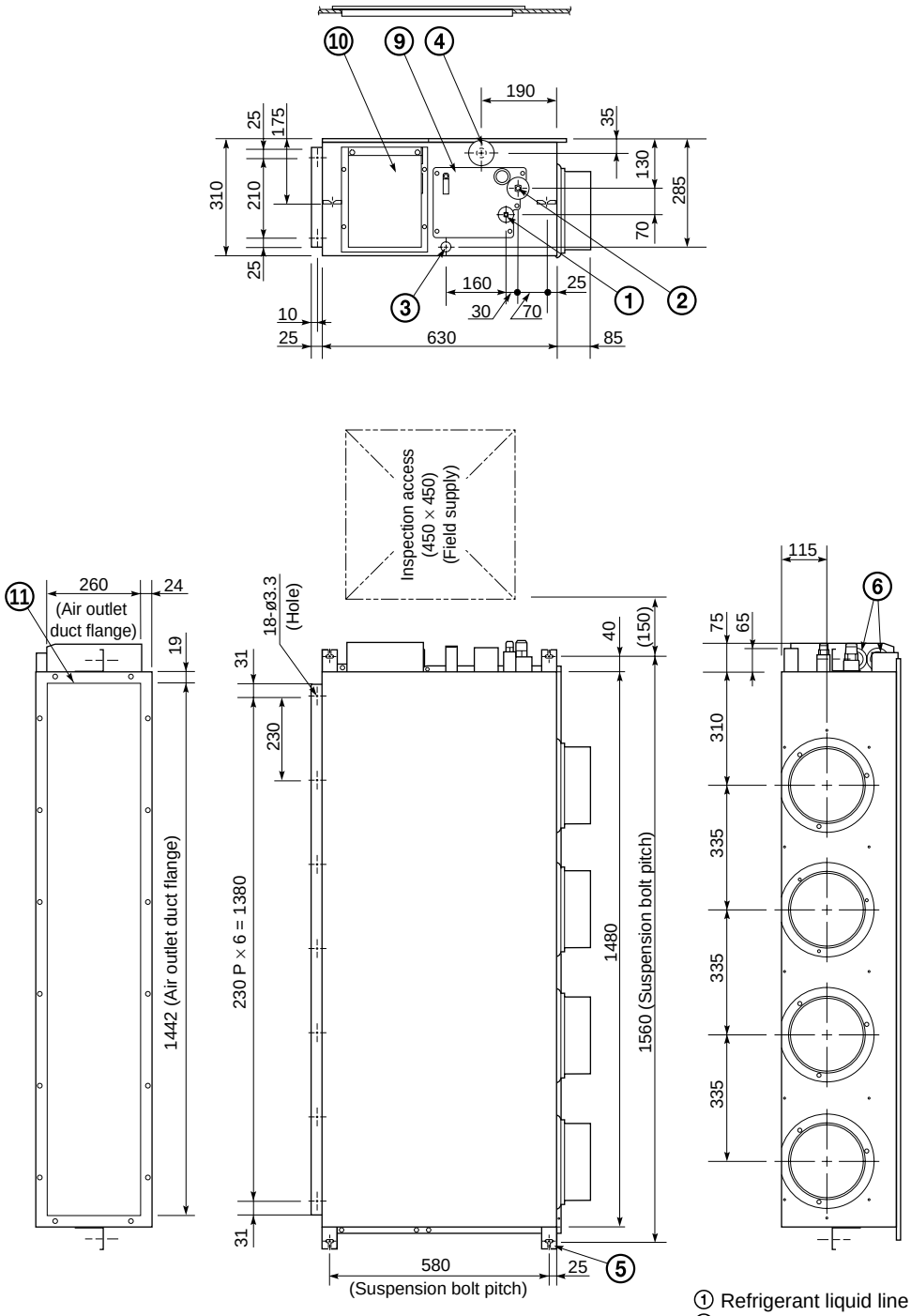

① Refrigerant liquid line ø9.52 (narrow tube)
② Refrigerant gas line ø19.05 (wide tube)
③ Upper drain port (O.D. 32 mm)
④ Bottom drain port (O.D. 26 mm)
⑤ Suspension lug
⑥ Power supply outlet (2-ø30)
⑦ Fresh air intake port (ø150)
⑧ Flange for the flexible air outlet duct (ø200)
⑨ Tube cover
⑩ Electrical component box
⑪ Flange for the air intake duct
(Option or field supply)

1732_U_I

■ Flange for the air intake duct (Field supply)

: For Concealed Duct Type

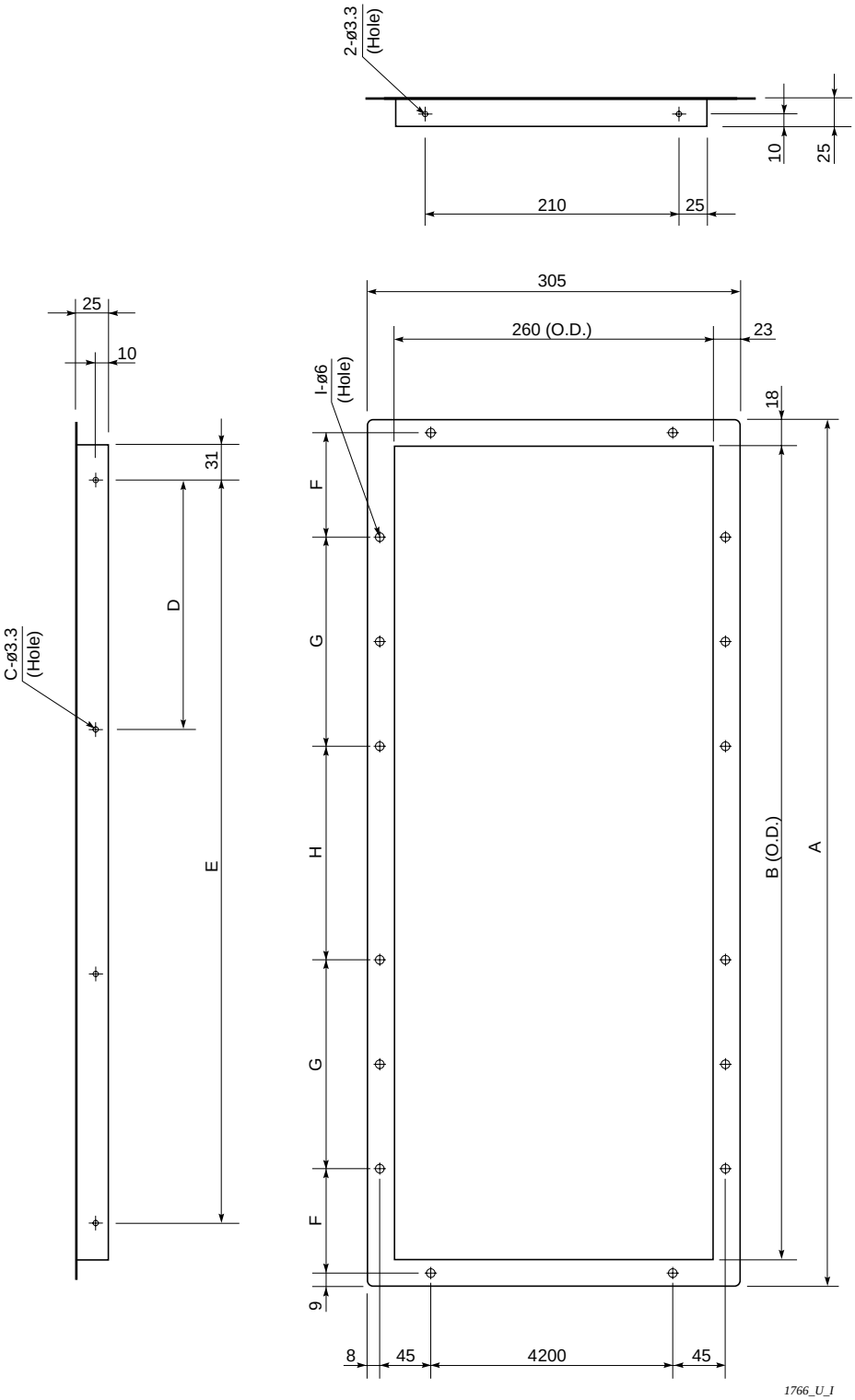

(mm)

	A	B	C	D	E	F	G	H	I
9, 12, 18 type	698	662	4	200	3 × 200P = 600	170	–	340	12
25 type	998	962	6	180	5 × 180P = 900	120	245 (245 × 1)	250	16
36, 48 type	1,478	1,442	7	230	6 × 230P = 1,380	120	490 (245 × 2)	240	20

(B) Outdoor Units : AER525SCE, AER525SC3E, AER525SCL3E

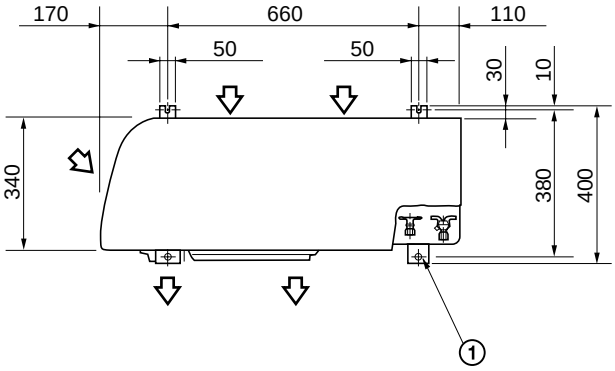

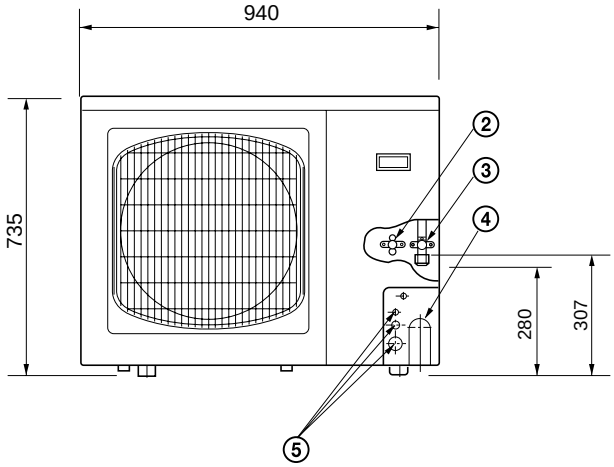

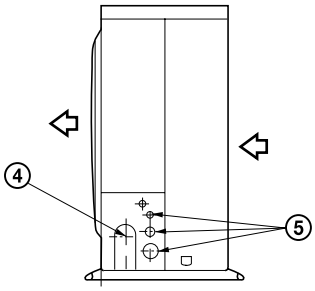

Dimension : mm

① Hole for anchor bolt (4-ø13)
② Refrigerant tube joint (narrow tube)
Flare connection 1/4 in (6.35 mm)
③ Refrigerant tube joint (wide tube)
Flare connection 5/8 in (15.88 mm)
④ Refrigerant tubing inlet
⑤ Power supply inlet

(B) Outdoor Units : AER536SC3E, AER536SCL3E
AER548SC3E, AER548SCL3E

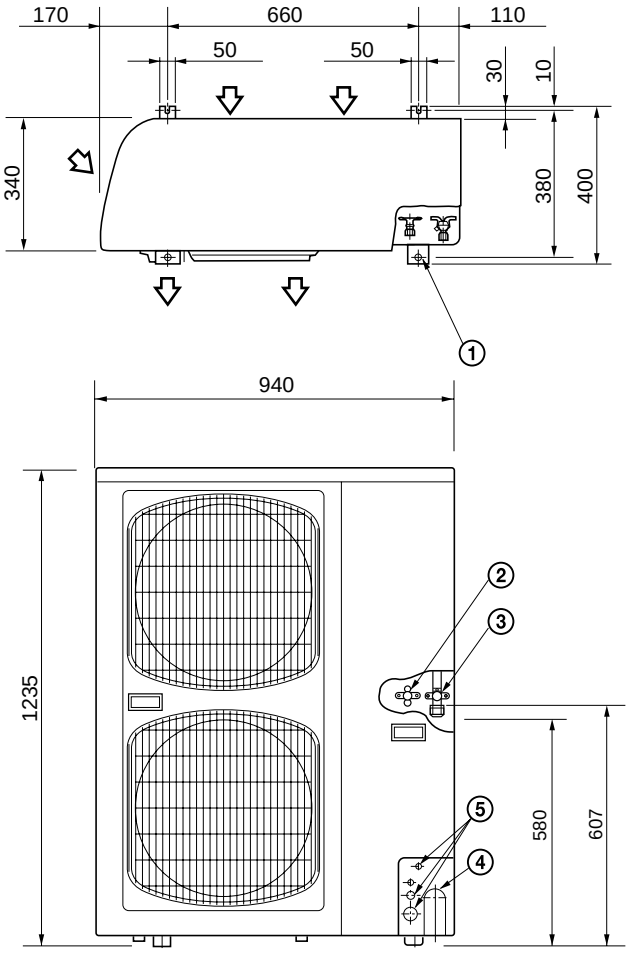

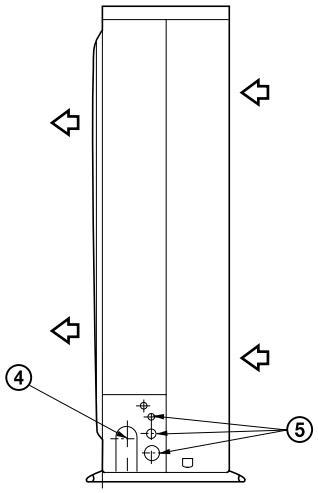

Dimension : mm

① Hole for anchor bolt (4-ø13)
② Refrigerant tube joint (narrow tube)
Flare connection 3/8 in (9.52 mm)
③ Refrigerant tube joint (wide tube)
Flare connection 3/4 in (19.05 mm)
④ Refrigerant tubing inlet
⑤ Power supply inlet

1-5 Refrigerant Flow Diagram

Outdoor Units : AER525SCE **Indoor Unit : 25 Type**
AER525SC3E

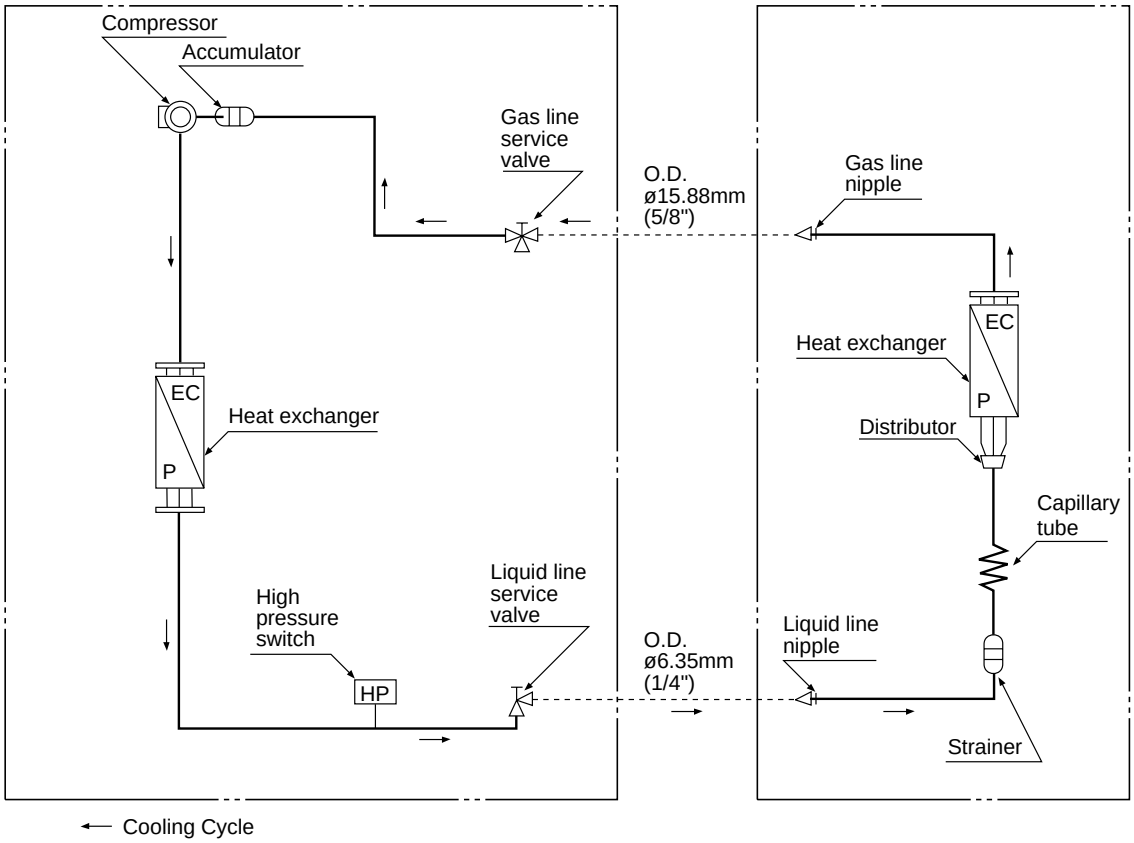

1-5 Refrigerant Flow Diagram

Outdoor Units : AER525SCL3E **Indoor Unit : 25 Type**

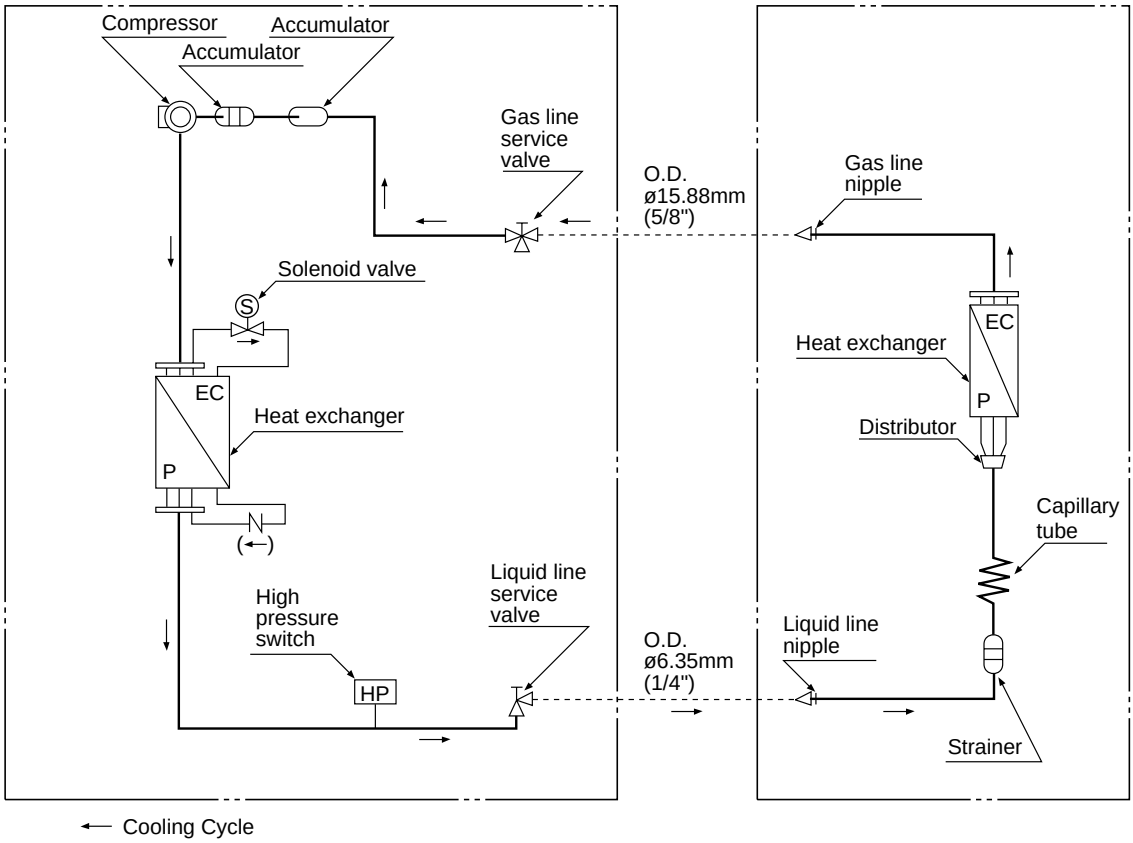

1-5 Refrigerant Flow Diagram

Outdoor Units : AER536SC(L)3E **Indoor Units : 36, 48 Type**
AER548SC(L)3E

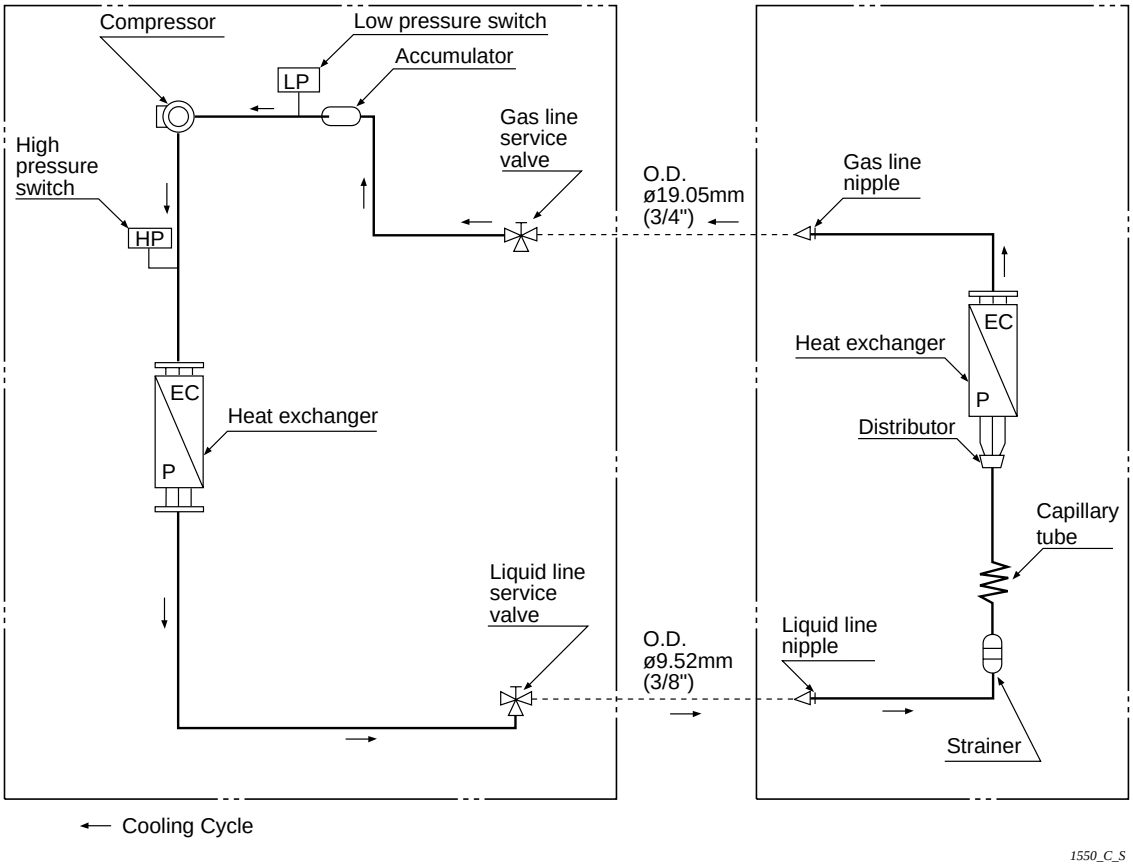

1-6 Operating Range

	Temperature	Indoor aire intake temp.	Outdoor air intake temp.
Cooling	Maximum	35°C DB / 23°C WB	43°C DB
	Minimum	19°C DB / 14°C WB	–15°C DB (EL Type), 19°C DB (E Type)

1-7 Cooling Capacity

Indoor Unit : AS425C Outdoor Unit : AER525SCE

RATING CAPACITY :		7.3 kW			AIR FLOW RATE :	1140 CMH	
EVAPORATOR		CONDENSER					
ENT. TEMP. °C		AMBIENT TEMP °C					
WB	DB		25	30	35	40	43
15		TC	6.95	6.68	6.40	6.15	5.99
		CI	2.24	2.37	2.49	2.60	2.65
	21	SHC	4.6	4.5	4.4	4.2	4.1
	23	SHC	5.2	5.1	4.9	4.8	4.7
	25	SHC	5.8	5.6	5.5	5.3	5.3
	27	SHC	6.3	6.2	6	5.9	5.8
	29	SHC	6.9	6.68	6.4	6.15	5.99
	31	SHC	6.95	6.68	6.4	6.15	5.99
17		TC	7.45	7.15	6.85	6.58	6.41
		CI	2.30	2.43	2.55	2.67	2.72
	21	SHC	4.1	3.9	3.8	3.7	3.6
	23	SHC	4.6	4.5	4.3	4.2	4.1
	25	SHC	5.2	5	4.9	4.8	4.7
	27	SHC	5.7	5.6	5.5	5.3	5.2
	29	SHC	6.3	6.2	6	5.9	5.8
	31	SHC	6.9	6.7	6.6	6.4	6.4
19		TC	7.93	7.61	# 7.3	7.01	6.83
		CI	2.07	2.35	2.63	2.91	3.08
	21	SHC	3.5	3.3	3.2	3.1	3
	23	SHC	4	3.9	3.7	3.6	3.5
	25	SHC	4.6	4.4	4.3	4.2	4.1
	27	SHC	5.1	5	4.9	4.7	4.7
	29	SHC	5.7	5.6	5.4	5.3	5.2
	31	SHC	6.3	6.1	6	5.8	5.8
21		TC	8.41	8.08	7.75	7.44	7.24
		CI	2.43	2.58	2.70	2.82	2.88
	23	SHC	3.4	3.3	3.1	3	2.9
	25	SHC	4	3.8	3.7	3.6	3.5
	27	SHC	4.5	4.4	4.2	4.1	4
	29	SHC	5.1	4.9	4.8	4.7	4.6
	31	SHC	5.6	5.5	5.4	5.2	5.2
23		TC	8.91	8.56	8.21	7.88	7.67
		CI	2.50	2.65	2.77	2.90	2.96
	25	SHC	3.3	3.2	3.1	2.9	2.9
	27	SHC	3.9	3.8	3.6	3.5	3.4
	29	SHC	4.5	4.3	4.2	4.1	4
	31	SHC	5	4.9	4.7	4.6	4.5
25		TC	9.40	9.03	8.66	8.31	8.10
		CI	2.57	2.72	2.85	2.98	3.04
	27	SHC	3.2	3.1	3	2.8	2.8
	29	SHC	3.8	3.7	3.5	3.4	3.3
	31	SHC	4.3	4.2	4.1	4	3.9

TC : Total Cooling Capacity (kW)
SHC : Sensible Heat Capacity (kW)
CI : Compressor Input (kW)

Rating conditions are
: Outdoor Ambient Temp. 35 °C DB
: Indoor Unit Entering Air Temp. 27 °C DB / 19 °C WB

1-7 Cooling Capacity

Indoor Unit : AS425C Outdoor Unit : AER525SC(L)3E

RATING CAPACITY :		7.3 kW			AIR FLOW RATE :	1140 CMH	
EVAPORATOR		CONDENSER					
ENT. TEMP. °C		AMBIENT TEMP °C					
WB	DB		25	30	35	40	43
15		TC	6.95	6.68	6.40	6.15	5.99
		CI	2.15	2.28	2.39	2.50	2.55
	21	SHC	4.6	4.5	4.4	4.2	4.1
	23	SHC	5.2	5.1	4.9	4.8	4.7
	25	SHC	5.8	5.6	5.5	5.3	5.3
	27	SHC	6.3	6.2	6	5.9	5.8
	29	SHC	6.9	6.68	6.4	6.15	5.99
	31	SHC	6.95	6.68	6.4	6.15	5.99
17		TC	7.45	7.15	6.85	6.58	6.41
		CI	2.21	2.34	2.45	2.57	2.61
	21	SHC	4.1	3.9	3.8	3.7	3.6
	23	SHC	4.6	4.5	4.3	4.2	4.1
	25	SHC	5.2	5	4.9	4.8	4.7
	27	SHC	5.7	5.6	5.5	5.3	5.2
	29	SHC	6.3	6.2	6	5.9	5.8
	31	SHC	6.9	6.7	6.6	6.4	6.4
19		TC	7.93	7.61	# 7.3	7.01	6.83
		CI	1.99	2.26	2.53	2.80	2.96
	21	SHC	3.5	3.3	3.2	3.1	3
	23	SHC	4	3.9	3.7	3.6	3.5
	25	SHC	4.6	4.4	4.3	4.2	4.1
	27	SHC	5.1	5	4.9	4.7	4.7
	29	SHC	5.7	5.6	5.4	5.3	5.2
	31	SHC	6.3	6.1	6	5.8	5.8
21		TC	8.41	8.08	7.75	7.44	7.24
		CI	2.34	2.48	2.60	2.72	2.77
	23	SHC	3.4	3.3	3.1	3	2.9
	25	SHC	4	3.8	3.7	3.6	3.5
	27	SHC	4.5	4.4	4.2	4.1	4
	29	SHC	5.1	4.9	4.8	4.7	4.6
	31	SHC	5.6	5.5	5.4	5.2	5.2
23		TC	8.91	8.56	8.21	7.88	7.67
		CI	2.40	2.55	2.67	2.79	2.84
	25	SHC	3.3	3.2	3.1	2.9	2.9
	27	SHC	3.9	3.8	3.6	3.5	3.4
	29	SHC	4.5	4.3	4.2	4.1	4
	31	SHC	5	4.9	4.7	4.6	4.5
25		TC	9.40	9.03	8.66	8.31	8.10
		CI	2.47	2.62	2.75	2.87	2.92
	27	SHC	3.2	3.1	3	2.8	2.8
	29	SHC	3.8	3.7	3.5	3.4	3.3
	31	SHC	4.3	4.2	4.1	4	3.9

TC : Total Cooling Capacity (kW)
SHC : Sensible Heat Capacity (kW)
CI : Compressor Input (kW)

Rating conditions are
: Outdoor Ambient Temp. 35 °C DB
: Indoor Unit Entering Air Temp. 27 °C DB / 19 °C WB

1-7 Cooling Capacity

Indoor Unit : AS436C Outdoor Unit : AER536SC(L)3E

RATING CAPACITY :		10.6 kW			AIR FLOW RATE :	1920 CMH	
EVAPORATOR		CONDENSER					
ENT. TEMP. °C		AMBIENT TEMP °C					
WB	DB		25	30	35	40	43
15		TC	10.09	9.70	9.30	8.93	8.69
		CI	3.17	3.36	3.52	3.68	3.74
	21	SHC	7	6.8	6.6	6.4	6.3
	23	SHC	7.9	7.7	7.5	7.3	7.2
	25	SHC	8.8	8.6	8.5	8.3	8.2
	27	SHC	9.8	9.6	9.3	8.93	8.69
	29	SHC	10.09	9.7	9.3	8.93	8.69
	31	SHC	10.09	9.7	9.3	8.93	8.69
17		TC	10.81	10.38	9.95	9.55	9.31
		CI	3.25	3.44	3.61	3.77	3.84
	21	SHC	6	5.8	5.6	5.5	5.4
	23	SHC	7	6.8	6.6	6.4	6.3
	25	SHC	7.9	7.7	7.5	7.3	7.2
	27	SHC	8.8	8.6	8.4	8.3	8.1
	29	SHC	9.8	9.6	9.4	9.2	9.1
	31	SHC	10.7	10.38	9.95	9.55	9.31
19		TC	11.51	11.06	# 10.6	10.18	9.91
		CI	2.93	3.33	3.72	4.11	4.35
	21	SHC	5	4.8	4.6	4.5	4.4
	23	SHC	6	5.8	5.6	5.4	5.3
	25	SHC	6.9	6.7	6.5	6.3	6.2
	27	SHC	7.8	7.6	7.4	7.3	7.2
	29	SHC	8.8	8.6	8.4	8.2	8.1
	31	SHC	9.7	9.5	9.3	9.1	9
21		TC	12.21	11.73	11.25	10.80	10.52
		CI	3.44	3.65	3.82	4.00	4.07
	23	SHC	4.9	4.8	4.6	4.4	4.3
	25	SHC	5.9	5.7	5.5	5.3	5.2
	27	SHC	6.8	6.6	6.4	6.2	6.1
	29	SHC	7.7	7.6	7.4	7.2	7.1
	31	SHC	8.7	8.5	8.3	8.1	8
23		TC	12.94	12.42	11.91	11.44	11.14
		CI	3.53	3.74	3.92	4.10	4.18
	25	SHC	4.8	4.6	4.5	4.3	4.2
	27	SHC	5.8	5.6	5.4	5.2	5.1
	29	SHC	6.7	6.5	6.3	6.1	6
	31	SHC	7.6	7.4	7.3	7.1	7
25		TC	13.65	13.11	12.57	12.07	11.76
		CI	3.63	3.85	4.04	4.22	4.30
	27	SHC	4.7	4.5	4.3	4.2	4.1
	29	SHC	5.6	5.4	5.3	5.1	5
	31	SHC	6.6	6.4	6.2	6	5.9

TC : Total Cooling Capacity (kW)
SHC : Sensible Heat Capacity (kW)
CI : Compressor Input (kW)

Rating conditions are
: Outdoor Ambient Temp. 35 °C DB
: Indoor Unit Entering Air Temp. 27 °C DB / 19 °C WB

1-7 Cooling Capacity

Indoor Unit : AS448C Outdoor Unit : AER548SC(L)3E

RATING CAPACITY :		12.6 kW			AIR FLOW RATE :	1920 CMH	
EVAPORATOR		CONDENSER					
ENT. TEMP. °C		AMBIENT TEMP °C					
WB	DB		25	30	35	40	43
15		TC	12.00	11.53	11.05	10.61	10.33
		CI	3.67	3.89	4.07	4.26	4.34
	21	SHC	8	7.7	7.5	7.2	7.1
	23	SHC	8.9	8.7	8.4	8.2	8
	25	SHC	9.8	9.6	9.3	9.1	9
	27	SHC	10.8	10.5	10.3	10	9.9
	29	SHC	11.7	11.4	11.05	10.61	10.33
	31	SHC	12	11.53	11.05	10.61	10.33
17		TC	12.85	12.34	11.83	11.35	11.06
		CI	3.76	3.99	4.18	4.37	4.45
	21	SHC	7	6.8	6.5	6.3	6.2
	23	SHC	8	7.7	7.5	7.2	7.1
	25	SHC	8.9	8.6	8.4	8.2	8
	27	SHC	9.8	9.6	9.3	9.1	9
	29	SHC	10.8	10.5	10.3	10	9.9
	31	SHC	11.7	11.4	11.2	11	10.8
19		TC	13.68	13.14	# 12.6	12.10	11.78
		CI	3.40	3.86	4.31	4.76	5.04
	21	SHC	6	5.8	5.5	5.3	5.2
	23	SHC	6.9	6.7	6.5	6.2	6.1
	25	SHC	7.9	7.6	7.4	7.2	7
	27	SHC	8.8	8.6	8.3	8.1	8
	29	SHC	9.7	9.5	9.2	9	8.9
	31	SHC	10.7	10.4	10.2	10	9.8
21		TC	14.52	13.95	13.37	12.84	12.50
		CI	3.99	4.23	4.43	4.63	4.72
	23	SHC	5.9	5.7	5.4	5.2	5.1
	25	SHC	6.8	6.6	6.4	6.1	6
	27	SHC	7.8	7.5	7.3	7.1	6.9
	29	SHC	8.7	8.5	8.2	8	7.9
	31	SHC	9.6	9.4	9.1	8.9	8.8
23		TC	15.38	14.77	14.16	13.60	13.24
		CI	4.09	4.34	4.55	4.75	4.84
	25	SHC	5.8	5.5	5.3	5.1	4.9
	27	SHC	6.7	6.5	6.2	6	5.9
	29	SHC	7.6	7.4	7.2	6.9	6.8
	31	SHC	8.6	8.3	8.1	7.9	7.7
25		TC	16.23	15.59	14.94	14.35	13.97
		CI	4.21	4.46	4.68	4.89	4.98
	27	SHC	5.6	5.4	5.1	4.9	4.8
	29	SHC	6.5	6.3	6.1	5.9	5.7
	31	SHC	7.5	7.2	7	6.8	6.7

TC : Total Cooling Capacity (kW)
SHC : Sensible Heat Capacity (kW)
CI : Compressor Input (kW)

Rating conditions are
: Outdoor Ambient Temp. 35 °C DB
: Indoor Unit Entering Air Temp. 27 °C DB / 19 °C WB

1-7 Cooling Capacity

Indoor Unit : AC425C Outdoor Unit : AER525SCE

RATING CAPACITY :		7.3 kW			AIR FLOW RATE :	1080 CMH	
EVAPORATOR		CONDENSER					
ENT. TEMP. °C		AMBIENT TEMP °C					
WB	DB		25	30	35	40	43
15		TC	6.95	6.68	6.40	6.15	5.99
		CI	2.24	2.37	2.49	2.60	2.65
	21	SHC	4.7	4.5	4.4	4.3	4.2
	23	SHC	5.2	5.1	5	4.8	4.7
	25	SHC	5.8	5.7	5.5	5.4	5.3
	27	SHC	6.4	6.2	6.1	6	5.9
	29	SHC	6.9	6.68	6.4	6.15	5.99
	31	SHC	6.95	6.68	6.4	6.15	5.99
17		TC	7.45	7.15	6.85	6.58	6.41
		CI	2.30	2.43	2.55	2.67	2.72
	21	SHC	4.1	4	3.8	3.7	3.6
	23	SHC	4.7	4.5	4.4	4.3	4.2
	25	SHC	5.2	5.1	4.9	4.8	4.7
	27	SHC	5.8	5.7	5.5	5.4	5.3
	29	SHC	6.4	6.2	6.1	5.9	5.9
	31	SHC	6.9	6.8	6.6	6.5	6.4
19		TC	7.93	7.61	# 7.3	7.01	6.83
		CI	2.07	2.35	2.63	2.91	3.08
	21	SHC	3.5	3.4	3.2	3.1	3
	23	SHC	4.1	3.9	3.8	3.6	3.6
	25	SHC	4.6	4.5	4.3	4.2	4.1
	27	SHC	5.2	5	4.9	4.8	4.7
	29	SHC	5.8	5.6	5.5	5.3	5.3
	31	SHC	6.3	6.2	6	5.9	5.8
21		TC	8.41	8.08	7.75	7.44	7.24
		CI	2.43	2.58	2.70	2.82	2.88
	23	SHC	3.4	3.3	3.2	3	3
	25	SHC	4	3.9	3.7	3.6	3.5
	27	SHC	4.6	4.4	4.3	4.2	4.1
	29	SHC	5.1	5	4.8	4.7	4.6
	31	SHC	5.7	5.6	5.4	5.3	5.2
23		TC	8.91	8.56	8.21	7.88	7.67
		CI	2.50	2.65	2.77	2.90	2.96
	25	SHC	3.4	3.2	3.1	3	2.9
	27	SHC	3.9	3.8	3.6	3.5	3.4
	29	SHC	4.5	4.3	4.2	4.1	4
	31	SHC	5.1	4.9	4.8	4.7	4.6
25		TC	9.40	9.03	8.66	8.31	8.10
		CI	2.57	2.72	2.85	2.98	3.04
	27	SHC	3.3	3.1	3	2.9	2.8
	29	SHC	3.8	3.7	3.6	3.4	3.4
	31	SHC	4.4	4.3	4.1	4	3.9

TC : Total Cooling Capacity (kW)
SHC : Sensible Heat Capacity (kW)
CI : Compressor Input (kW)

Rating conditions are
: Outdoor Ambient Temp. 35 °C DB
: Indoor Unit Entering Air Temp. 27 °C DB / 19 °C WB

1-7 Cooling Capacity

Indoor Unit : AC425C Outdoor Unit : AER525SC(L)3E

RATING CAPACITY :		7.3 kW			AIR FLOW RATE :	1080 CMH	
EVAPORATOR		CONDENSER					
ENT. TEMP. °C		AMBIENT TEMP °C					
WB	DB		25	30	35	40	43
15		TC	6.95	6.68	6.40	6.15	5.99
		CI	2.15	2.28	2.39	2.50	2.55
	21	SHC	4.7	4.5	4.4	4.3	4.2
	23	SHC	5.2	5.1	5	4.8	4.7
	25	SHC	5.8	5.7	5.5	5.4	5.3
	27	SHC	6.4	6.2	6.1	6	5.9
	29	SHC	6.9	6.68	6.4	6.15	5.99
	31	SHC	6.95	6.68	6.4	6.15	5.99
17		TC	7.45	7.15	6.85	6.58	6.41
		CI	2.21	2.34	2.45	2.57	2.61
	21	SHC	4.1	4	3.8	3.7	3.6
	23	SHC	4.7	4.5	4.4	4.3	4.2
	25	SHC	5.2	5.1	4.9	4.8	4.7
	27	SHC	5.8	5.7	5.5	5.4	5.3
	29	SHC	6.4	6.2	6.1	5.9	5.9
	31	SHC	6.9	6.8	6.6	6.5	6.4
19		TC	7.93	7.61	# 7.3	7.01	6.83
		CI	1.99	2.26	2.53	2.80	2.96
	21	SHC	3.5	3.4	3.2	3.1	3
	23	SHC	4.1	3.9	3.8	3.6	3.6
	25	SHC	4.6	4.5	4.3	4.2	4.1
	27	SHC	5.2	5	4.9	4.8	4.7
	29	SHC	5.8	5.6	5.5	5.3	5.3
	31	SHC	6.3	6.2	6	5.9	5.8
21		TC	8.41	8.08	7.75	7.44	7.24
		CI	2.34	2.48	2.60	2.72	2.77
	23	SHC	3.4	3.3	3.2	3	3
	25	SHC	4	3.9	3.7	3.6	3.5
	27	SHC	4.6	4.4	4.3	4.2	4.1
	29	SHC	5.1	5	4.8	4.7	4.6
	31	SHC	5.7	5.6	5.4	5.3	5.2
23		TC	8.91	8.56	8.21	7.88	7.67
		CI	2.40	2.55	2.67	2.79	2.84
	25	SHC	3.4	3.2	3.1	3	2.9
	27	SHC	3.9	3.8	3.6	3.5	3.4
	29	SHC	4.5	4.3	4.2	4.1	4
	31	SHC	5.1	4.9	4.8	4.7	4.6
25		TC	9.40	9.03	8.66	8.31	8.10
		CI	2.47	2.62	2.75	2.87	2.92
	27	SHC	3.3	3.1	3	2.9	2.8
	29	SHC	3.8	3.7	3.6	3.4	3.4
	31	SHC	4.4	4.3	4.1	4	3.9

TC : Total Cooling Capacity (kW)
SHC : Sensible Heat Capacity (kW)
CI : Compressor Input (kW)

Rating conditions are
: Outdoor Ambient Temp. 35 °C DB
: Indoor Unit Entering Air Temp. 27 °C DB / 19 °C WB

1-7 Cooling Capacity

Indoor Unit : AC436C Outdoor Unit : AER536SC(L)3E

RATING CAPACITY :		10.6 kW			AIR FLOW RATE :		1800 CMH
EVAPORATOR		CONDENSER					
ENT. TEMP. °C		AMBIENT TEMP °C					
WB	DB		25	30	35	40	43
15		TC	10.09	9.70	9.30	8.93	8.69
		CI	3.17	3.36	3.52	3.68	3.74
	21	SHC	7.1	6.9	6.7	6.5	6.4
	23	SHC	8	7.8	7.6	7.5	7.4
	25	SHC	9	8.8	8.6	8.4	8.3
	27	SHC	10	9.7	9.3	8.93	8.69
	29	SHC	10.09	9.7	9.3	8.93	8.69
	31	SHC	10.09	9.7	9.3	8.93	8.69
17		TC	10.81	10.38	9.95	9.55	9.31
		CI	3.25	3.44	3.61	3.77	3.84
	21	SHC	6.1	5.9	5.7	5.5	5.4
	23	SHC	7	6.8	6.7	6.5	6.4
	25	SHC	8	7.8	7.6	7.4	7.3
	27	SHC	9	8.8	8.6	8.4	8.3
	29	SHC	9.9	9.8	9.6	9.4	9.3
	31	SHC	10.81	10.38	9.95	9.55	9.31
19		TC	11.51	11.06	# 10.6	10.18	9.91
		CI	2.93	3.33	3.72	4.11	4.35
	21	SHC	5	4.8	4.7	4.5	4.4
	23	SHC	6	5.8	5.6	5.5	5.3
	25	SHC	7	6.8	6.6	6.4	6.3
	27	SHC	7.9	7.8	7.6	7.4	7.3
	29	SHC	8.9	8.7	8.5	8.4	8.2
	31	SHC	9.9	9.7	9.5	9.3	9.2
21		TC	12.21	11.73	11.25	10.80	10.52
		CI	3.44	3.65	3.82	4.00	4.07
	23	SHC	5	4.8	4.6	4.4	4.3
	25	SHC	5.9	5.7	5.5	5.4	5.3
	27	SHC	6.9	6.7	6.5	6.3	6.2
	29	SHC	7.9	7.7	7.5	7.3	7.2
	31	SHC	8.8	8.6	8.4	8.3	8.2
23		TC	12.94	12.42	11.91	11.44	11.14
		CI	3.53	3.74	3.92	4.10	4.18
	25	SHC	4.8	4.7	4.5	4.3	4.2
	27	SHC	5.8	5.6	5.4	5.3	5.2
	29	SHC	6.8	6.6	6.4	6.2	6.1
	31	SHC	7.7	7.6	7.4	7.2	7.1
25		TC	13.65	13.11	12.57	12.07	11.76
		CI	3.36	3.85	4.04	4.22	4.30
	27	SHC	4.7	4.5	4.3	4.2	4.1
	29	SHC	5.7	5.5	5.3	5.1	5
	31	SHC	6.6	6.5	6.3	6.1	6

TC : Total Cooling Capacity (kW)
SHC : Sensible Heat Capacity (kW)
CI : Compressor Input (kW)

Rating conditions are
: Outdoor Ambient Temp. 35 °C DB
: Indoor Unit Entering Air Temp. 27 °C DB / 19 °C WB

1-7 Cooling Capacity

Indoor Unit : AC448C Outdoor Unit : AER548SC(L)3E

RATING CAPACITY :		12.6 kW			AIR FLOW RATE :	1920 CMH	
EVAPORATOR		CONDENSER					
ENT. TEMP. °C		AMBIENT TEMP °C					
WB	DB		25	30	35	40	43
15		TC	12.00	11.53	11.05	10.61	10.33
		CI	3.67	3.89	4.07	4.26	4.34
	21	SHC	8.1	7.9	7.7	7.4	7.3
	23	SHC	9.2	8.9	8.7	8.5	8.3
	25	SHC	10.2	9.9	9.7	9.5	9.3
	27	SHC	11.2	11	10.7	10.5	10.33
	29	SHC	12	11.53	11.05	10.61	10.33
	31	SHC	12	11.53	11.05	10.61	10.33
17		TC	12.85	12.34	11.83	11.35	11.06
		CI	3.76	3.99	4.18	4.37	4.45
	21	SHC	7.1	6.9	6.6	6.4	6.3
	23	SHC	8.1	7.9	7.6	7.4	7.3
	25	SHC	9.1	8.9	8.7	8.4	8.3
	27	SHC	10.2	9.9	9.7	9.5	9.3
	29	SHC	11.2	10.9	10.7	10.5	10.3
	31	SHC	12.2	12	11.7	11.35	11.06
19		TC	13.68	13.14	# 12.6	12.10	11.78
		CI	3.40	3.86	4.31	4.76	5.04
	21	SHC	6	5.8	5.5	5.3	5.2
	23	SHC	7	6.8	6.5	6.3	6.2
	25	SHC	8	7.8	7.6	7.3	7.2
	27	SHC	9.1	8.8	8.6	8.4	8.2
	29	SHC	10.1	9.8	9.6	9.4	9.3
	31	SHC	11.1	10.9	10.6	10.4	10.3
21		TC	14.52	13.95	13.37	12.84	12.50
		CI	3.99	4.23	4.43	4.63	4.72
	23	SHC	5.9	5.7	5.4	5.2	5.1
	25	SHC	6.9	6.7	6.4	6.2	6.1
	27	SHC	7.9	7.7	7.5	7.3	7.1
	29	SHC	9	8.7	8.5	8.3	8.1
	31	SHC	10	9.7	9.5	9.3	9.2
23		TC	15.38	14.77	14.16	13.60	13.24
		CI	4.09	4.34	4.55	4.75	4.84
	25	SHC	5.8	5.5	5.3	5.1	5
	27	SHC	6.8	6.5	6.3	6.1	6
	29	SHC	7.8	7.6	7.3	7.1	7
	31	SHC	8.8	8.6	8.4	8.2	8
25		TC	16.23	15.59	14.94	14.35	13.97
		CI	4.21	4.46	4.68	4.89	4.98
	27	SHC	5.6	5.4	5.1	4.9	4.8
	29	SHC	6.6	6.4	6.2	6	5.8
	31	SHC	7.6	7.4	7.2	7	6.9

TC : Total Cooling Capacity (kW)
SHC : Sensible Heat Capacity (kW)
CI : Compressor Input (kW)

Rating conditions are
: Outdoor Ambient Temp. 35 °C DB
: Indoor Unit Entering Air Temp. 27 °C DB / 19 °C WB

1-7 Cooling Capacity

Indoor Unit : AD425CW Outdoor Unit : AER525SCE

RATING CAPACITY :		7.3 kW			AIR FLOW RATE :	1080 CMH	
EVAPORATOR		CONDENSER					
ENT. TEMP. °C		AMBIENT TEMP °C					
WB	DB		25	30	35	40	43
15		TC	6.95	6.68	6.40	6.15	5.99
		CI	2.24	2.37	2.49	2.60	2.65
	21	SHC	4.7	4.5	4.4	4.2	4.2
	23	SHC	5.2	5.1	5	4.8	4.7
	25	SHC	5.8	5.7	5.5	5.4	5.3
	27	SHC	6.4	6.2	6.1	6	5.9
	29	SHC	6.95	6.68	6.4	6.15	5.99
	31	SHC	6.95	6.68	6.4	6.15	5.99
17		TC	7.45	7.15	6.85	6.58	6.41
		CI	2.30	2.43	2.55	2.67	2.72
	21	SHC	4.1	3.9	3.8	3.7	3.6
	23	SHC	4.6	4.5	4.4	4.2	4.2
	25	SHC	5.2	5.1	4.9	4.8	4.7
	27	SHC	5.8	5.7	5.5	5.4	5.3
	29	SHC	6.4	6.2	6.1	6	5.9
	31	SHC	7	6.8	6.7	6.5	6.41
19		TC	7.93	7.61	# 7.3	7.01	6.83
		CI	2.07	2.35	2.63	2.91	3.08
	21	SHC	3.4	3.3	3.2	3	3
	23	SHC	4	3.9	3.7	3.6	3.5
	25	SHC	4.6	4.5	4.3	4.2	4.1
	27	SHC	5.2	5	4.9	4.8	4.7
	29	SHC	5.8	5.6	5.5	5.3	5.3
	31	SHC	6.3	6.2	6	5.9	5.8
21		TC	8.41	8.08	7.75	7.44	7.24
		CI	2.43	2.58	2.70	2.82	2.88
	23	SHC	3.4	3.2	3.1	3	2.9
	25	SHC	4	3.8	3.7	3.6	3.5
	27	SHC	4.5	4.4	4.3	4.1	4.1
	29	SHC	5.1	5	4.8	4.7	4.6
	31	SHC	5.7	5.5	5.4	5.3	5.2
23		TC	8.91	8.56	8.21	7.88	7.67
		CI	2.50	2.65	2.77	2.90	2.96
	25	SHC	3.3	3.2	3	2.9	2.8
	27	SHC	3.9	3.7	3.6	3.5	3.4
	29	SHC	4.5	4.3	4.2	4.1	4
	31	SHC	5	4.9	4.8	4.6	4.6
25		TC	9.40	9.03	8.66	8.31	8.10
		CI	2.57	2.72	2.85	2.98	3.04
	27	SHC	3.2	3.1	2.9	2.8	2.7
	29	SHC	3.8	3.6	3.5	3.4	3.3
	31	SHC	4.4	4.2	4.1	4	3.9

TC : Total Cooling Capacity (kW)
SHC : Sensible Heat Capacity (kW)
CI : Compressor Input (kW)

Rating conditions are
: Outdoor Ambient Temp. 35 °C DB
: Indoor Unit Entering Air Temp. 27 °C DB / 19 °C WB

1-7 Cooling Capacity

Indoor Unit : AD425CW Outdoor Unit : AER525SC(L)3E

RATING CAPACITY :		7.3 kW			AIR FLOW RATE :	1080 CMH	
EVAPORATOR		CONDENSER					
ENT. TEMP. °C		AMBIENT TEMP °C					
WB	DB		25	30	35	40	43
15		TC	6.95	6.68	6.40	6.15	5.99
		CI	2.15	2.28	2.39	2.50	2.55
	21	SHC	4.7	4.5	4.4	4.2	4.2
	23	SHC	5.2	5.1	5	4.8	4.7
	25	SHC	5.8	5.7	5.5	5.4	5.3
	27	SHC	6.4	6.2	6.1	6	5.9
	29	SHC	6.95	6.68	6.4	6.15	5.99
	31	SHC	6.95	6.68	6.4	6.15	5.99
17		TC	7.45	7.15	6.85	6.58	6.41
		CI	2.21	2.34	2.45	2.57	2.61
	21	SHC	4.1	3.9	3.8	3.7	3.6
	23	SHC	4.6	4.5	4.4	4.2	4.2
	25	SHC	5.2	5.1	4.9	4.8	4.7
	27	SHC	5.8	5.7	5.5	5.4	5.3
	29	SHC	6.4	6.2	6.1	6	5.9
	31	SHC	7	6.8	6.7	6.5	6.41
19		TC	7.93	7.61	# 7.3	7.01	6.83
		CI	1.99	2.26	2.53	2.80	2.96
	21	SHC	3.4	3.3	3.2	3	3
	23	SHC	4	3.9	3.7	3.6	3.5
	25	SHC	4.6	4.5	4.3	4.2	4.1
	27	SHC	5.2	5	4.9	4.8	4.7
	29	SHC	5.8	5.6	5.5	5.3	5.3
	31	SHC	6.3	6.2	6	5.9	5.8
21		TC	8.41	8.08	7.75	7.44	7.24
		CI	2.34	2.48	2.60	2.72	2.77
	23	SHC	3.4	3.2	3.1	3	2.9
	25	SHC	4	3.8	3.7	3.6	3.5
	27	SHC	4.5	4.4	4.3	4.1	4.1
	29	SHC	5.1	5	4.8	4.7	4.6
	31	SHC	5.7	5.5	5.4	5.3	5.2
23		TC	8.91	8.56	8.21	7.88	7.67
		CI	2.40	2.55	2.67	2.79	2.84
	25	SHC	3.3	3.2	3	2.9	2.8
	27	SHC	3.9	3.7	3.6	3.5	3.4
	29	SHC	4.5	4.3	4.2	4.1	4
	31	SHC	5	4.9	4.8	4.6	4.6
25		TC	9.40	9.03	8.66	8.31	8.10
		CI	2.47	2.62	2.75	2.87	2.92
	27	SHC	3.2	3.1	2.9	2.8	2.7
	29	SHC	3.8	3.6	3.5	3.4	3.3
	31	SHC	4.4	4.2	4.1	4	3.9

TC : Total Cooling Capacity (kW)
SHC : Sensible Heat Capacity (kW)
CI : Compressor Input (kW)

Rating conditions are
: Outdoor Ambient Temp. 35 °C DB
: Indoor Unit Entering Air Temp. 27 °C DB / 19 °C WB

1-7 Cooling Capacity

Indoor Unit : AD436CW Outdoor Unit : AER536SC(L)3E

RATING CAPACITY :		10.6 kW			AIR FLOW RATE :	1800 CMH	
EVAPORATOR		CONDENSER					
ENT. TEMP. °C		AMBIENT TEMP °C					
WB	DB		25	30	35	40	43
15		TC	10.09	9.70	9.30	8.93	8.69
		CI	3.17	3.36	3.52	3.68	3.74
	21	SHC	7	6.8	6.6	6.4	6.3
	23	SHC	7.9	7.7	7.6	7.4	7.3
	25	SHC	8.9	8.7	8.5	8.3	8.2
	27	SHC	9.9	9.7	9.3	8.93	8.69
	29	SHC	10.09	9.7	9.3	8.93	8.69
	31	SHC	10.09	9.7	9.3	8.93	8.69
17		TC	10.81	10.38	9.95	9.55	9.31
		CI	3.25	3.44	3.61	3.77	3.84
	21	SHC	6	5.8	5.6	5.4	5.3
	23	SHC	7	6.8	6.6	6.4	6.3
	25	SHC	7.9	7.7	7.5	7.4	7.2
	27	SHC	8.9	8.7	8.5	8.3	8.2
	29	SHC	9.8	9.6	9.4	9.3	9.2
	31	SHC	10.8	10.38	9.95	9.55	9.31
19		TC	11.51	11.06	# 10.6	10.18	9.91
		CI	2.93	3.33	3.72	4.11	4.35
	21	SHC	5	4.8	4.6	4.4	4.3
	23	SHC	5.9	5.7	5.5	5.4	5.3
	25	SHC	6.9	6.7	6.5	6.3	6.2
	27	SHC	7.9	7.7	7.5	7.3	7.2
	29	SHC	8.8	8.6	8.4	8.2	8.1
	31	SHC	9.8	9.6	9.4	9.2	9.1
21		TC	12.21	11.73	11.25	10.80	10.52
		CI	3.44	3.65	3.82	4.00	4.07
	23	SHC	4.9	4.7	4.5	4.3	4.2
	25	SHC	5.8	5.7	5.5	5.3	5.2
	27	SHC	6.8	6.6	6.4	6.2	6.1
	29	SHC	7.8	7.6	7.4	7.2	7.1
	31	SHC	8.7	8.5	8.3	8.2	8.1
23		TC	12.94	12.42	11.91	11.44	11.14
		CI	3.53	3.74	3.92	4.10	4.18
	25	SHC	4.8	4.6	4.4	4.2	4.1
	27	SHC	5.7	5.5	5.4	5.2	5.1
	29	SHC	6.7	6.5	6.3	6.1	6
	31	SHC	7.6	7.5	7.3	7.1	7
25		TC	13.65	13.11	12.57	12.07	11.76
		CI	3.63	3.85	4.04	4.22	4.30
	27	SHC	4.6	4.4	4.3	4.1	4
	29	SHC	5.6	5.4	5.2	5.1	5
	31	SHC	6.5	6.4	6.2	6	5.9

TC : Total Cooling Capacity (kW)
SHC : Sensible Heat Capacity (kW)
CI : Compressor Input (kW)

Rating conditions are
: Outdoor Ambient Temp. 35 °C DB
: Indoor Unit Entering Air Temp. 27 °C DB / 19 °C WB

1-7 Cooling Capacity

Indoor Unit : AD448CW Outdoor Unit : AER548SC(L)3E

RATING CAPACITY :		12.6 kW			AIR FLOW RATE :	1980 CMH	
EVAPORATOR		CONDENSER					
ENT. TEMP. °C		AMBIENT TEMP °C					
WB	DB		25	30	35	40	43
15		TC	12.00	11.53	11.05	10.61	10.33
		CI	3.67	3.89	4.07	4.26	4.34
	21	SHC	8.1	7.9	7.6	7.4	7.3
	23	SHC	9.1	8.9	8.7	8.5	8.3
	25	SHC	10.2	9.9	9.7	9.5	9.4
	27	SHC	11.2	11	10.7	10.5	10.33
	29	SHC	12	11.53	11.05	10.61	10.33
	31	SHC	12	11.53	11.05	10.61	10.33
17		TC	12.85	12.34	11.83	11.35	11.06
		CI	3.76	3.99	4.18	4.37	4.45
	21	SHC	7.1	6.8	6.6	6.4	6.2
	23	SHC	8.1	7.8	7.6	7.4	7.3
	25	SHC	9.1	8.9	8.6	8.4	8.3
	27	SHC	10.2	9.9	9.7	9.5	9.3
	29	SHC	11.2	11	10.7	10.5	10.4
	31	SHC	12.2	12	11.8	11.35	11.06
19		TC	13.68	13.14	# 12.6	12.10	11.78
		CI	3.40	3.86	4.31	4.76	5.04
	21	SHC	5.9	5.7	5.5	5.3	5.1
	23	SHC	7	6.7	6.5	6.3	6.2
	25	SHC	8	7.8	7.5	7.3	7.2
	27	SHC	9	8.8	8.6	8.4	8.2
	29	SHC	10.1	9.8	9.6	9.4	9.3
	31	SHC	11.1	10.9	10.6	10.4	10.3
21		TC	14.52	13.95	13.37	12.84	12.50
		CI	3.99	4.23	4.43	4.63	4.72
	23	SHC	5.8	5.6	5.4	5.2	5
	25	SHC	6.9	6.6	6.4	6.2	6.1
	27	SHC	7.9	7.7	7.4	7.2	7.1
	29	SHC	8.9	8.7	8.5	8.3	8.1
	31	SHC	10	9.7	9.5	9.3	9.2
23		TC	15.38	14.77	14.16	13.60	13.24
		CI	4.09	4.34	4.55	4.75	4.84
	25	SHC	5.7	5.5	5.2	5	4.9
	27	SHC	6.7	6.5	6.3	6.1	5.9
	29	SHC	7.8	7.5	7.3	7.1	7
	31	SHC	8.8	8.6	8.3	8.1	8
25		TC	16.23	15.59	14.94	14.35	13.97
		CI	4.21	4.46	4.68	4.89	4.98
	27	SHC	5.5	5.3	5.1	4.9	4.7
	29	SHC	6.6	6.3	6.1	5.9	5.8
	31	SHC	7.6	7.4	7.1	6.9	6.8

TC : Total Cooling Capacity (kW)
SHC : Sensible Heat Capacity (kW)
CI : Compressor Input (kW)

Rating conditions are
: Outdoor Ambient Temp. 35 °C DB
: Indoor Unit Entering Air Temp. 27 °C DB / 19 °C WB

COOLING CAPACITY (Low ambient model)

Outdoor unit : AER525SCL3E

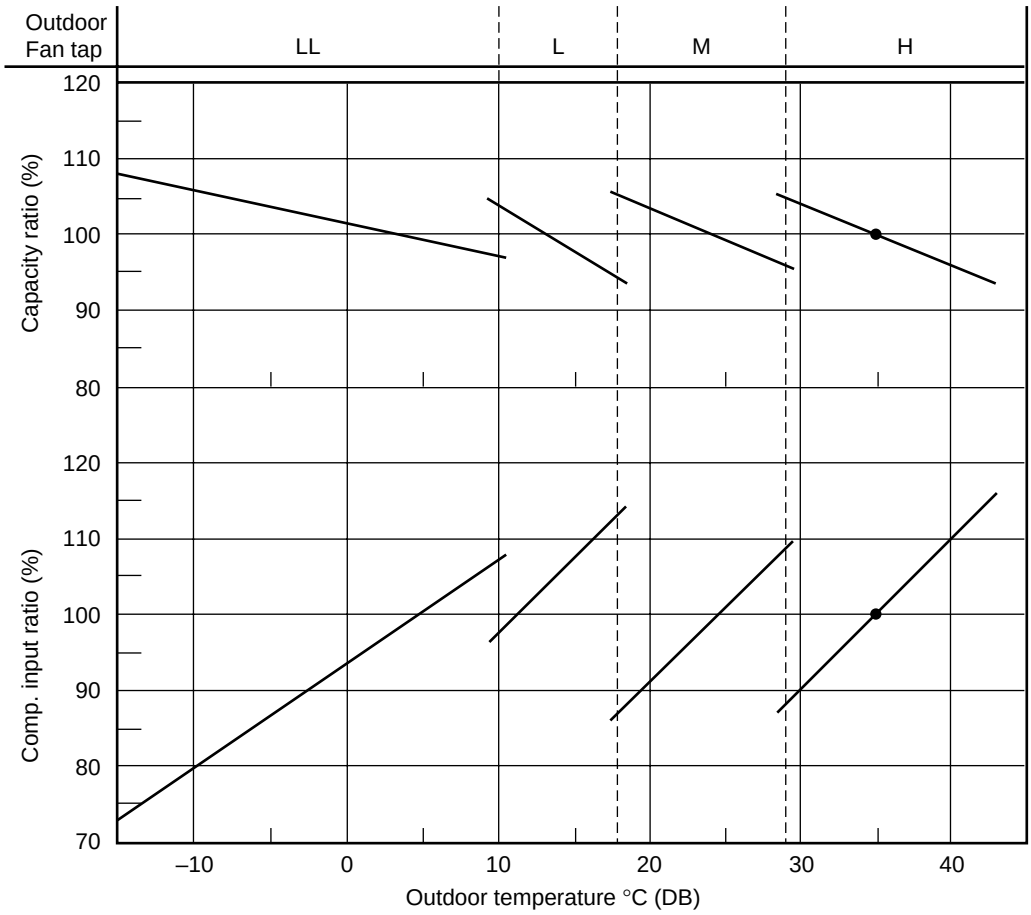

Outdoor unit : AER536SCL3E

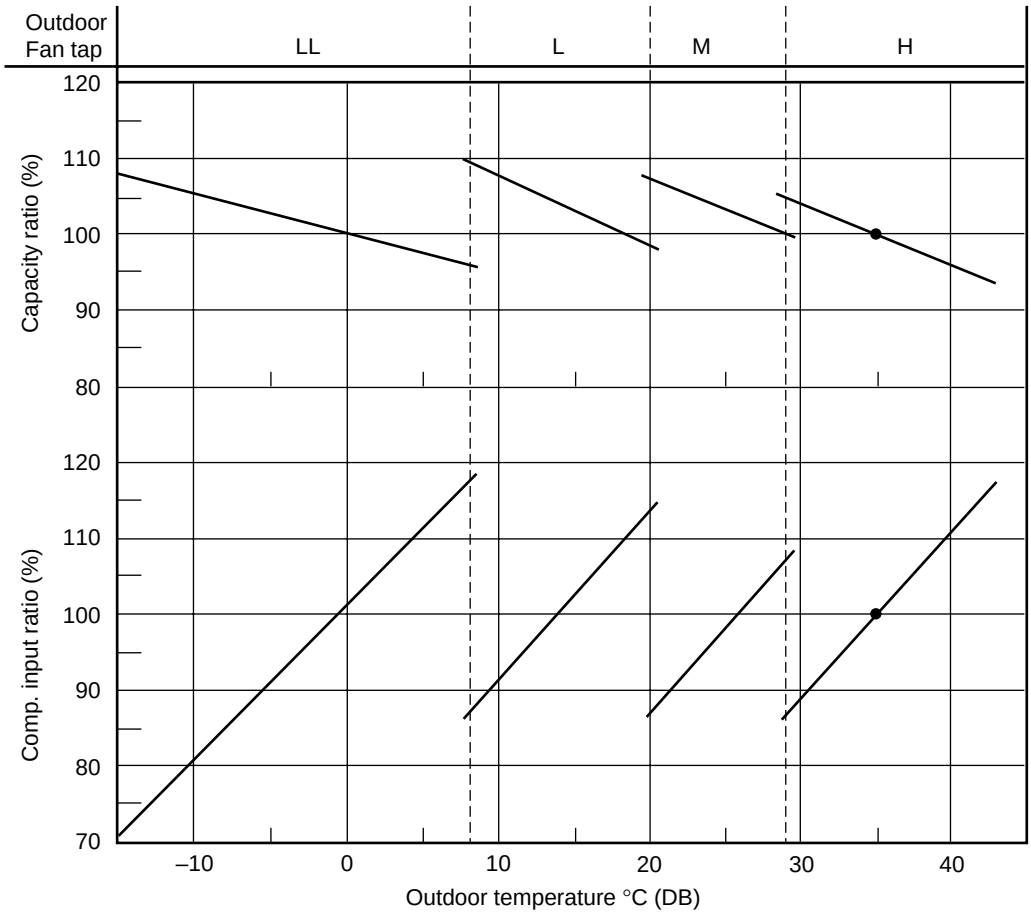

COOLING CAPACITY (Low ambient model)

Outdoor unit : AER548SCL3E

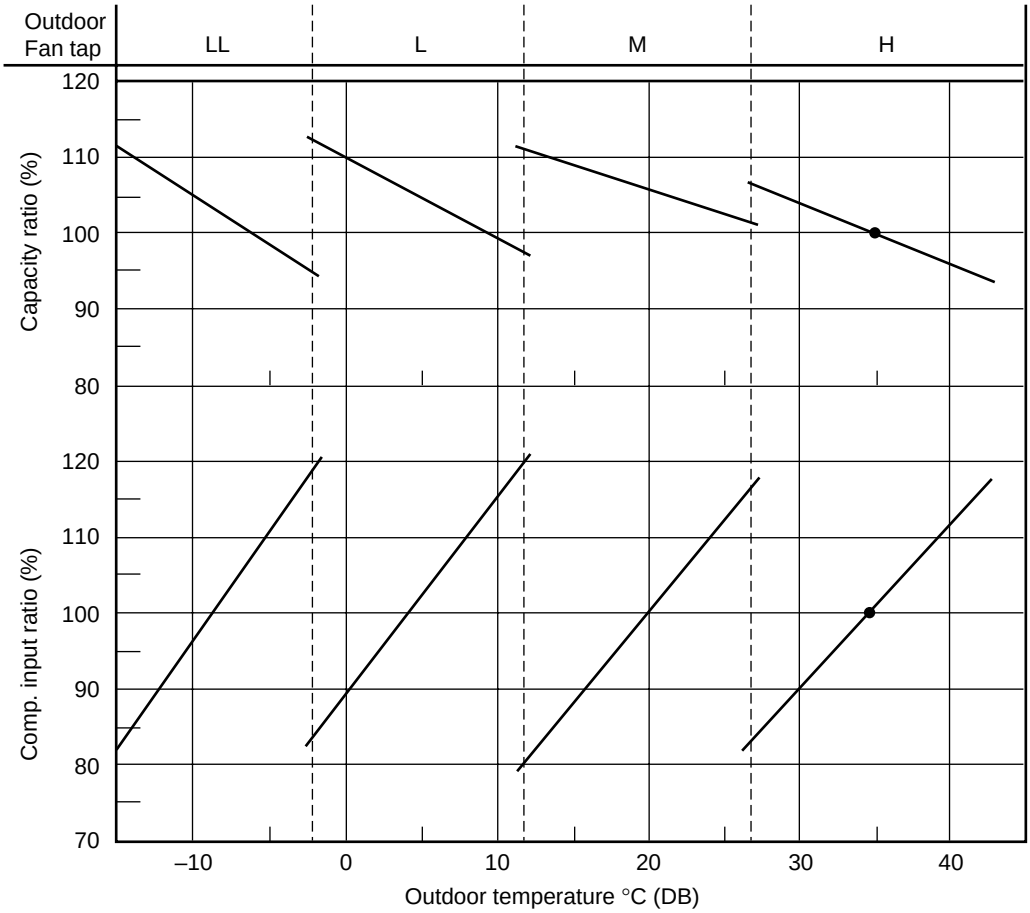

NOTE

1. According to outdoor air intake temp °C (DB) rises. Cooling capacity and Comp. input vary.
2. These characteristics are based on :
   a. Tubing length is 7.5 meters.
   b. Indoor side air state is 270DB/19WB.
3. • point is under rating conditions.
   Indoor : 27 °C DB/19 °C WB
   Outdoor : 35 °C DB
4. These characteristics indicate instantaneous capacity.
   Integrated capacity is instantaneous capacity less the effect of the drop of performance during freeze prevention cycle and others.

1-8 Noise Criterion Curves

4-Way Air Discharge Semi-concealed Type

MODEL	: AS425C
SOUND LEVEL	: HIGH 37 dB(A), NC 30
	LOW 31 dB(A), NC 22
CONDITION	: Center, Under the unit 1.5 m
SOURCE	: 220 - 230 - 240 V, 1 Phase, 50 Hz

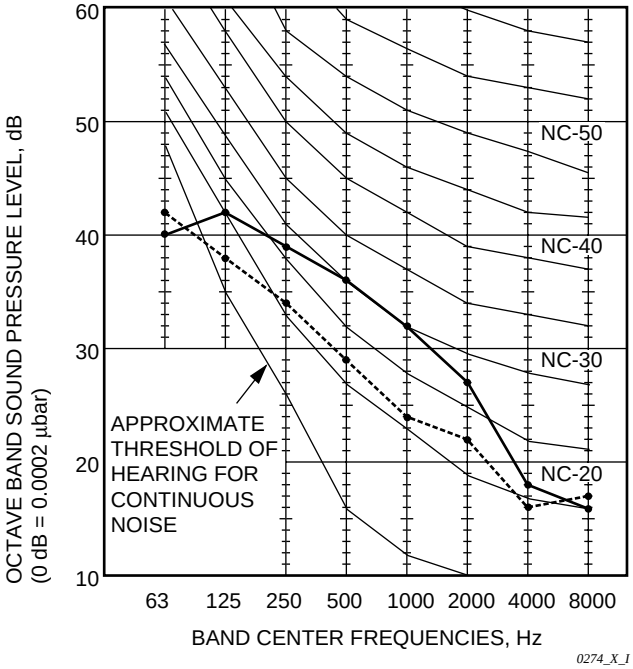

MODEL	: AS436C, AS448C
SOUND LEVEL	: HIGH 43 dB(A), NC 36
	LOW 36 dB(A), NC 24
CONDITION	: Center, Under the unit 1.5 m
SOURCE	: 220 - 230 - 240 V, 1 Phase, 50 Hz

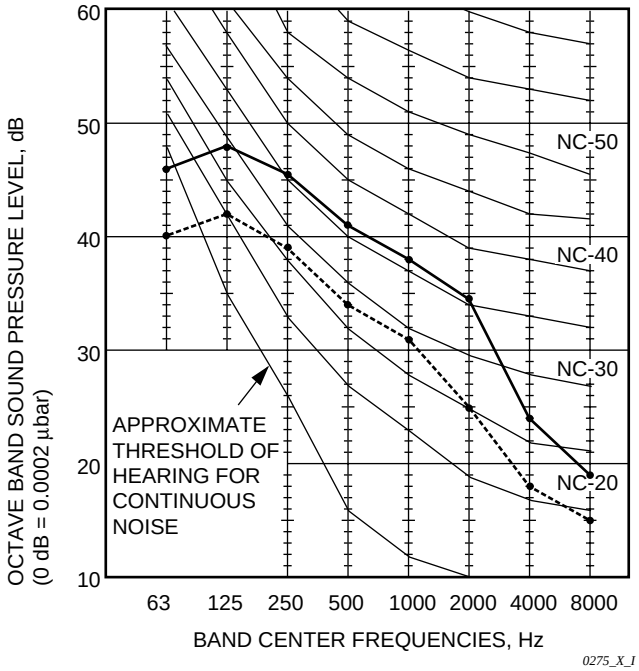

REMARKS: 1. Value obtained in the actual place where the unit is installed may be slightly higher than the values shown in this graph because of the conditions of operation, the structure of the building, the background noise and other factors.
2. The test results were obtained from an anechoic room.

NOTE

To evaluate “Noise level” the maximum number of the measured OCTAVE BAND SOUND PRESSURE LEVEL is used. Read the number on each BAND CENTER FREQUENCIES (horizontal axis) ranging from 63 Hz to 8000 Hz and select the maximum value (vertical axis) among them.

Ceiling Mounted Type

MODEL	: AC425C
SOUND LEVEL	: HIGH 39 dB(A), NC 34
	LOW 34 dB(A), NC 26
CONDITION	: Distance 1 m, Under the unit 1 m
SOURCE	: 220 - 230 - 240 V, 1 Phase, 50 Hz

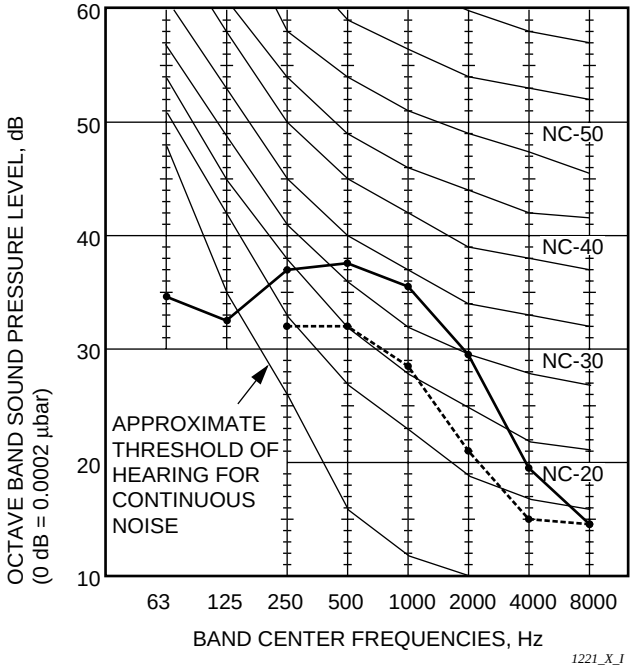

MODEL	: AC436C
SOUND LEVEL	: HIGH 42 dB(A), NC 36
	LOW 35 dB(A), NC 28
CONDITION	: Distance 1 m, Under the unit 1 m
SOURCE	: 220 - 230 - 240 V, 1 Phase, 50 Hz

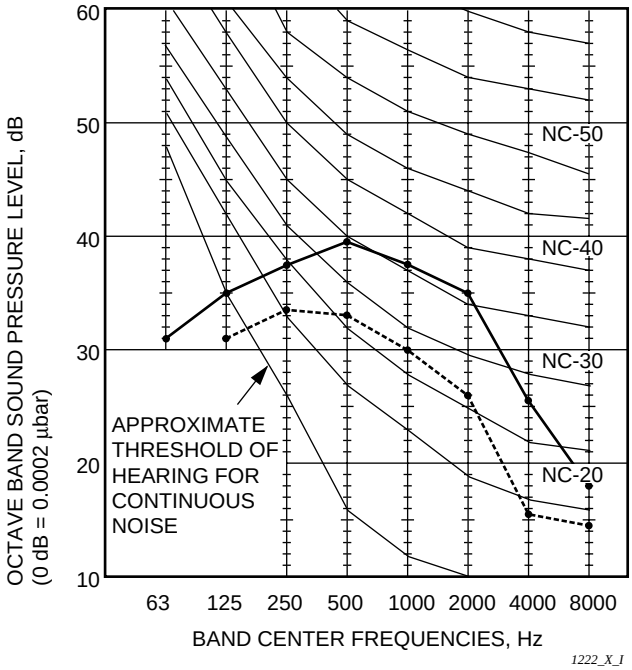

MODEL	: AC448C
SOUND LEVEL	: HIGH 44 dB(A), NC 38
	LOW 37 dB(A), NC 31
CONDITION	: Distance 1 m, Under the unit 1 m
SOURCE	: 220 - 230 - 240 V, 1 Phase, 50 Hz

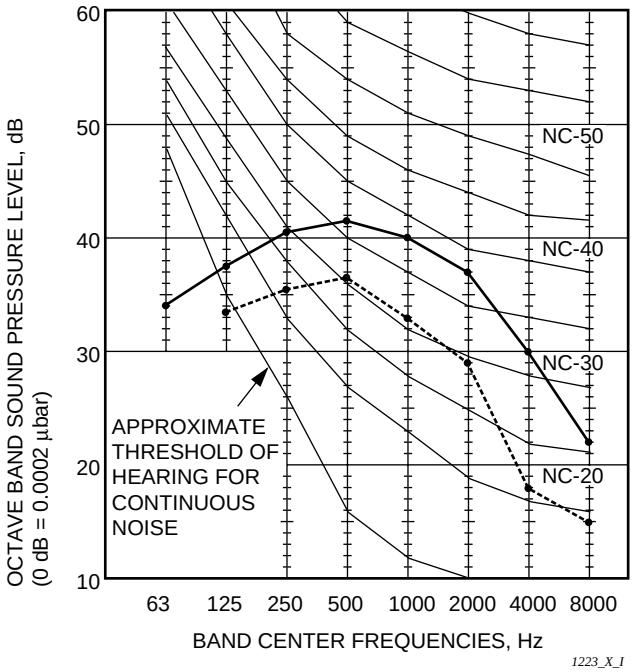

Concealed Duct Type

MODEL	: AD425CW
SOUND LEVEL	: HIGH 34 dB(A), NC 22 / LOW 27 dB(A), NC 18
CONDITION	: Under the unit 1.5 m
SOURCE	: 220 - 230 - 240 V, 1 Phase, 50 Hz

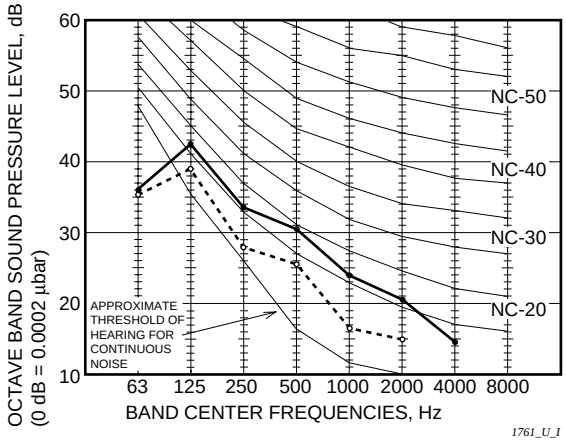

MODEL	: AD436CW
SOUND LEVEL	: HIGH 38 dB(A), NC 30 / LOW 31 dB(A), NC 21
CONDITION	: Under the unit 1.5 m
SOURCE	: 220 - 230 - 240 V, 1 Phase, 50 Hz

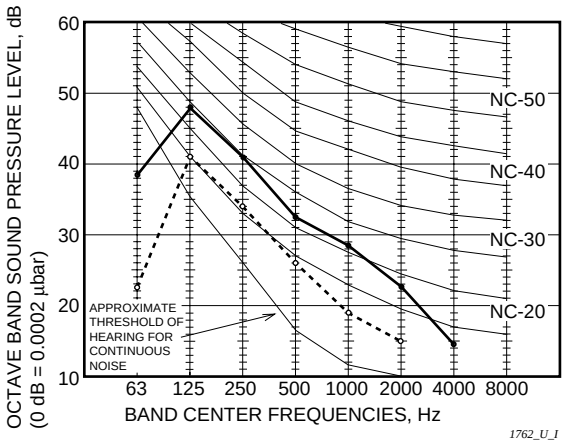

MODEL	: AD448CW
SOUND LEVEL	: HIGH 40 dB(A), NC 33 / LOW 33 dB(A), NC 25
CONDITION	: Under the unit 1.5 m
SOURCE	: 220 - 230 - 240 V, 1 Phase, 50 Hz

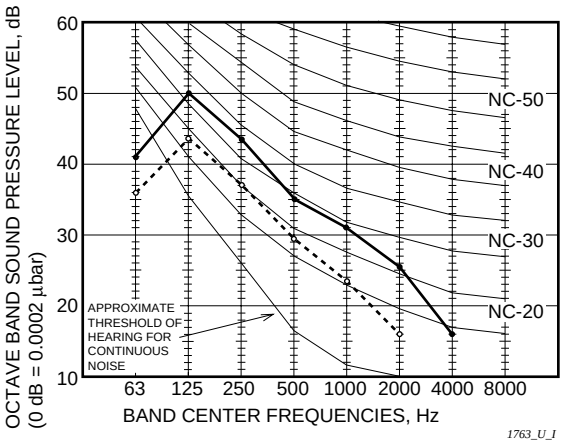

REMARKS: 1. Value obtained in the actual place where the unit is installed may be slightly higher than the values shown in this graph because of the conditions of operation, the structure of the building, the background noise and other factors.
2. The test results were obtained from an anechoic room.

NOTE

To evaluate “Noise level” the maximum number of the measured OCTAVE BAND SOUND PRESSURE LEVEL is used. Read the number on each BAND CENTER FREQUENCIES (horizontal axis) ranging from 63 Hz to 8000 Hz and select the maximum value (vertical axis) among them.

Outdoor Units

MODEL	: AER525SCE, AER525SC(L)3E
SOUND LEVEL	: 52 dB(A), NC 44
CONDITION	: Distance 1m, Height 1m
SOURCE	: 220 - 230 - 240 V, 1 Phase, 50 Hz 380 - 400 - 415V, 3 Phase, 50 Hz

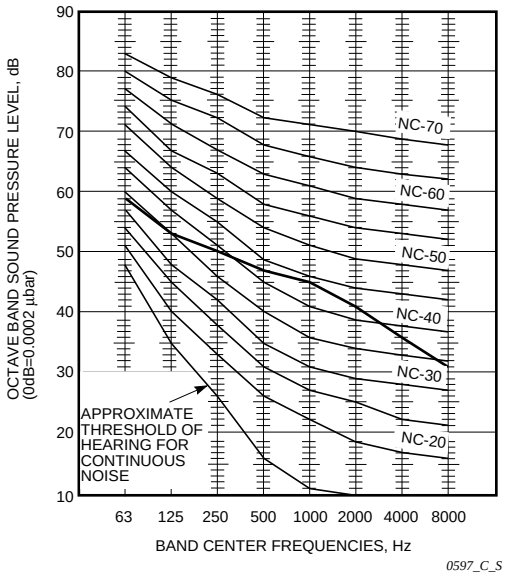

MODEL	: AER536SC(L)3E
SOUND LEVEL	: 53 dB(A), NC 45
CONDITION	: Distance 1m, Height 1m
SOURCE	: 380 - 400 - 415 V, 3 Phase, 50 Hz

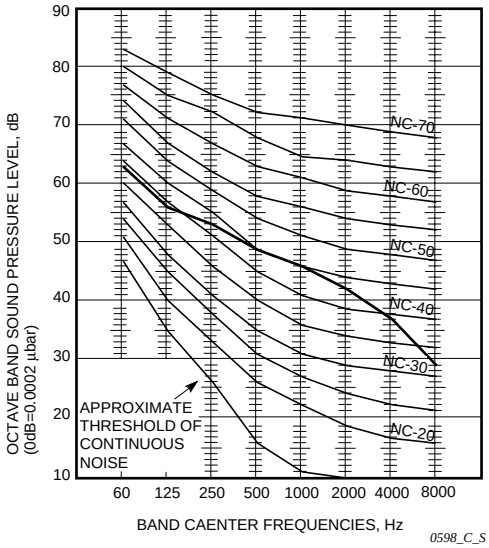

MODEL	: AER548SC(L)3E
SOUND LEVEL	: 55 dB(A), NC 47
CONDITION	: Distance 1m, Height 1m
SOURCE	: 380 - 400 - 415V, 3 Phase, 50 Hz

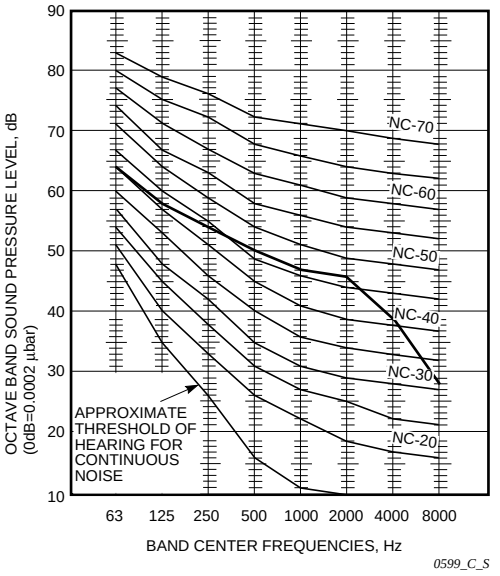

REMARKS: 1. Value obtained in the actual place where the unit is installed may be slightly higher than the values shown in this graph because of the conditions of operation, the structure of the building, the background noise and other factors.
2. The test results were obtained from an anechoic room.

NOTE

To evaluate “Noise level” the maximum number of the measured OCTAVE BAND SOUND PRESSURE LEVEL is used. Read the number on each BAND CENTER FREQUENCIES (horizontal axis) ranging from 63 Hz to 8000 Hz and select the maximum value (vertical axis) among them.

1-9 Indoor Fan Performance

Concealed Duct Type

If external static pressure is too great (due to long extension of ducts, for example), the air flow volume may drop too low at each air outlet. This problem may be solved by increasing the fan speed using the following procedure:

(1) Remove 2 screws on the electrical component box and remove the cover plate.

(2) Disconnect the fan motor sockets in the box.

(3) Take out the booster cable (sockets at both ends) clamped in the box.

(4) Securely connect the booster cable sockets between the disconnected fan motor sockets in step 2 as shown in the Fig. 1-1.

(5) Place the cable neatly in the box and reinstall the cover plate.

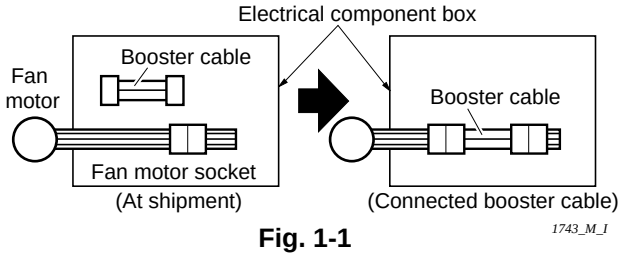

Fig. 1-1

Indoor Fan Performance

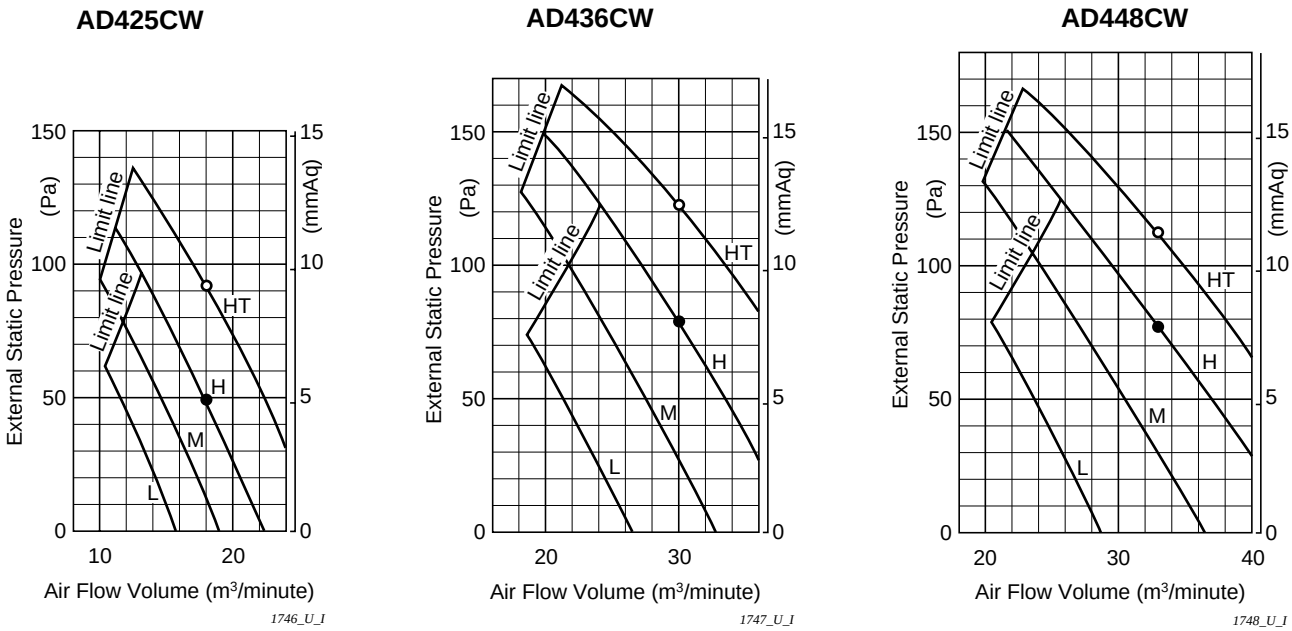

NOTE

HT : Using the booster cable

H : At shipment

Fig. 1-2

■ How to read the diagram

The vertical axis is the external static pressure (Pa) while the horizontal axis represents the AIR FLOW (m³/minute). The characteristic curves for “HT”, “H”, “M” and “L” fan speed control are shown.
The nameplate values are shown based on the “H” air flow. For the 25 type, the air flow is 18 m³/minute, while the external static pressure is 49 Pa at “H” position. If external static pressure is too great (due to long extension of duct, for example), the air flow volume may drop too low at each air outlet.
This problem may be solved by increasing the fan speed as explained above.

1-10 Air throw Distance Chart

4-Way Air Discharge Semi-concealed Type

Model: 25 Type

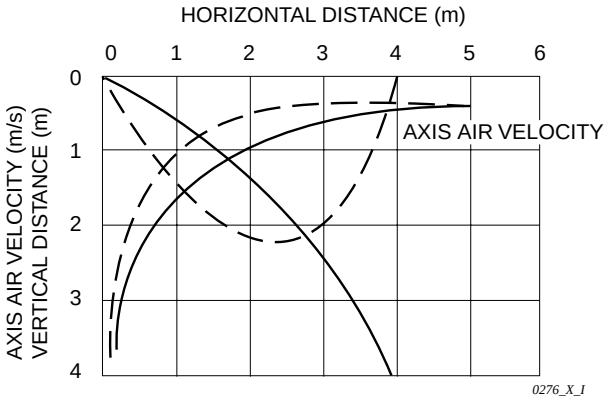

Model: 36, 48 Type

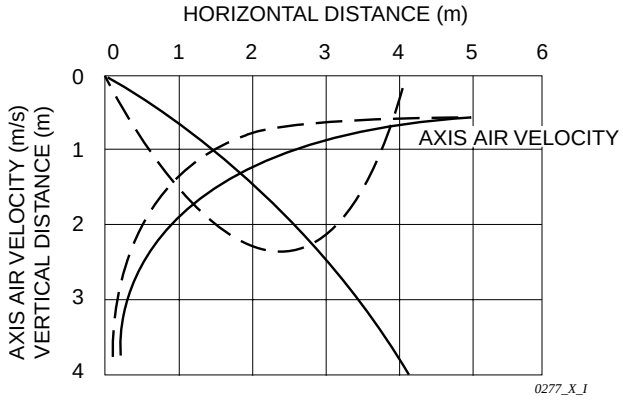

——————— : LOUVER ANGLE 20˚ in Cooling mode
— — — — — : LOUVER ANGLE 60˚ in Heating mode

Condition Fan Speed : Hi
Room air temp. : 27 ˚C DB in cooling mode
20 ˚C DB in heating mode

1-10 Air throw Distance Chart

Ceiling Mounted Type

Model: 25 Type

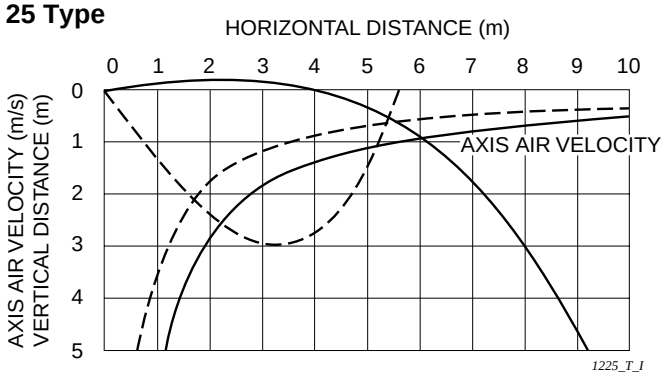

Model: 36 Type

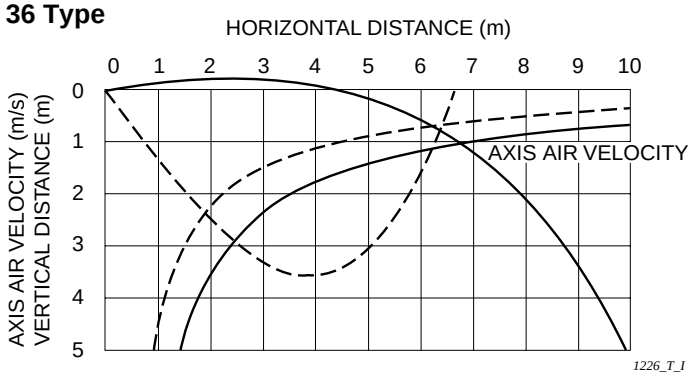

Model: 48 Type

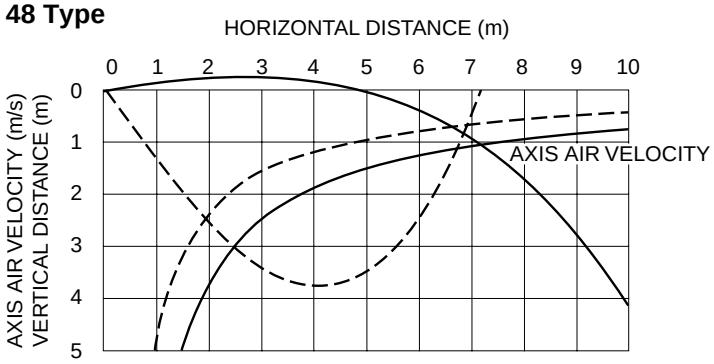

	COOLING	HEATING
FAN SPEED	HIGH	HIGH
ROOM AIR TEMP.	27˚	20˚
LOUVER ANGLE	– 7˚	54˚

——————— : COOLING

- - - - - - - - - - - - : HEATING

1227_T_I

1-11. Installation Instruction

● **Tubing Length**

- Refrigerant tubing between the indoor and outdoor units should be kept as short as possible.
- The length of the refrigerant tubing between theindoor and outdoor units is restricted by the elevation difference between the 2 units. This means that the more “uphill” 1 unit is from the other, the shorter the tubing must be. As you install the tubing, try to make both the tubing length (L) and the elevation (H) as short as possible. Refer to Fig. 1-2 and Table 1-1 for more information.

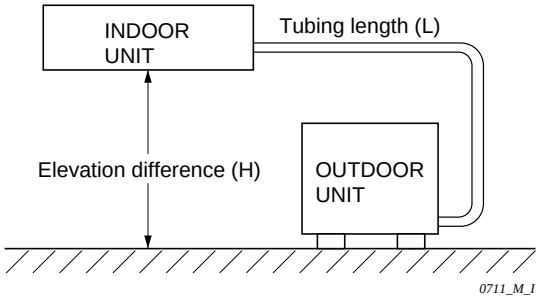

Fig. 1-2

Tabel 1-1
For 50Hz models

Tubing Data \ Models			25 type	36 type	48 type
Tubing size outer dia.	Narrow tube	mm(in.)	6.35 (1/4)	9.52 (3/8)	9.52 (3/8)
	Wide tube	mm (in.)	15.88 (5/8)	19.05 (3/4)	19.05 (3/4)
Limit of tubing length		(m)	40	50	50
Limit of elevation difference between the 2 units	Outdoor unit is higher than indoor unit	(m)	40	50	50
	Outdoor unit is lower than indoor unit	(m)	25	30	30
Max. allowable tubing length at shipment		(m)	15	15	15
Required additional refrigerant *1		(g/m)	a) 25	b) 80	b) 80
Refrigerant charged at shipment		(kg)	2.4 (3.0 *2)	4.0	4.3

No additional charge of compressor oil is necessary.

*1 If total tubing length becomes a) 15 to 40 m, b) 15 to 50 m (max.), charge additional refrigerant (R22) by a) 25 or b) 80 g/m.

*2 CR254EL8 (low ambient temperature model) only.

● Installation Site Selection

Indoor Unit

AVOID:

- areas where leakage of flammable gas may be expected.
- places where large amounts of oil mist exist.
- direct sunlight.
- locations where nearby heat sources may affect performance of the unit.
- locations where nearby external air may enter the room directly. This may cause “sweating” on the air discharge ports, causing them to spray or drip.
- locations where the remote control unit will be splashed with water or affected by dampness or humidity.
- installing the remote control unit behind curtains or furniture.

DO:

- select an appropriate position from which every corner of the room can be uniformly cooled.
- select a location where the ceiling is strong enough to support the weight of the unit.
- select a location where tubing and drain pipe have the shortest run to the outside.
- allow room for operation and maintenance as well as unrestricted air flow around the unit.
- install the unit within the maximum elevation difference (H) above or below the outdoor unit and within a total tubing length (L) from the outdoor unit as detailed in Table 1-2.
- allow room for mounting the remote control unit about 1 m off the floor, in an area that is not in direct sunlight nor in the flow of cool air from the indoor unit.

NOTE

Air delivery will be degraded if the distance from the floor to the ceiling is greater than 3 m.

Ceiling-Mounted Type

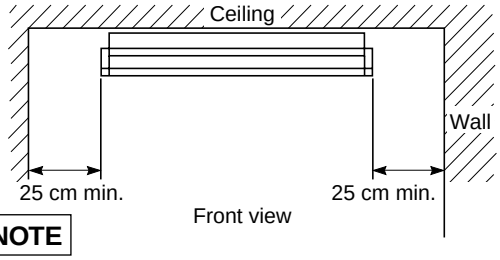

NOTE

The rear of the indoor unit can be installed flush against the wall.

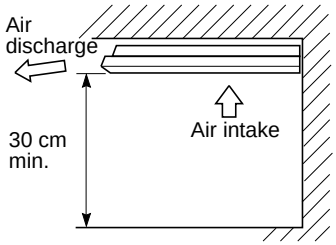

0020_T_I

4-Way Semi-Concealed Type

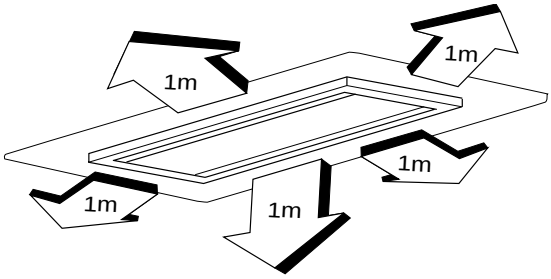

Outdoor Unit

AVOID:

- heat sources, exhaust fans, etc.
- damp, humid or uneven locations.

DO:

- choose a place as cool as possible.
- choose a place that is well ventilated
- allow enough room around the unit for air intake / exhaust and possible maintenance.
- provide a solid base; about 15 cm above ground level to reduce humidity and possible water damage in unit and decrease service life.
- use lag bolts or equal to bolt down unit, reducing vibration and noise.

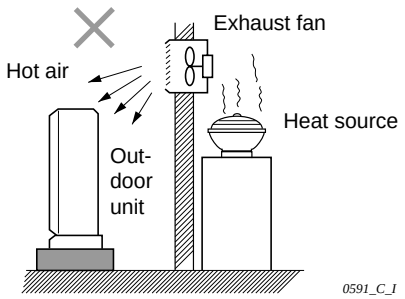

Ⓐ Dimension

Model	Min. (cm.)
25 type	10
36, 48 type	20

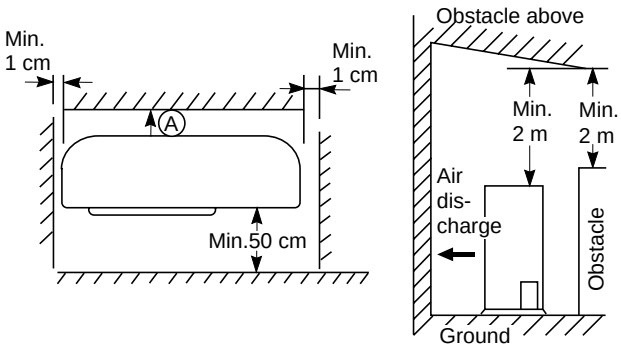

In case of multiple installations

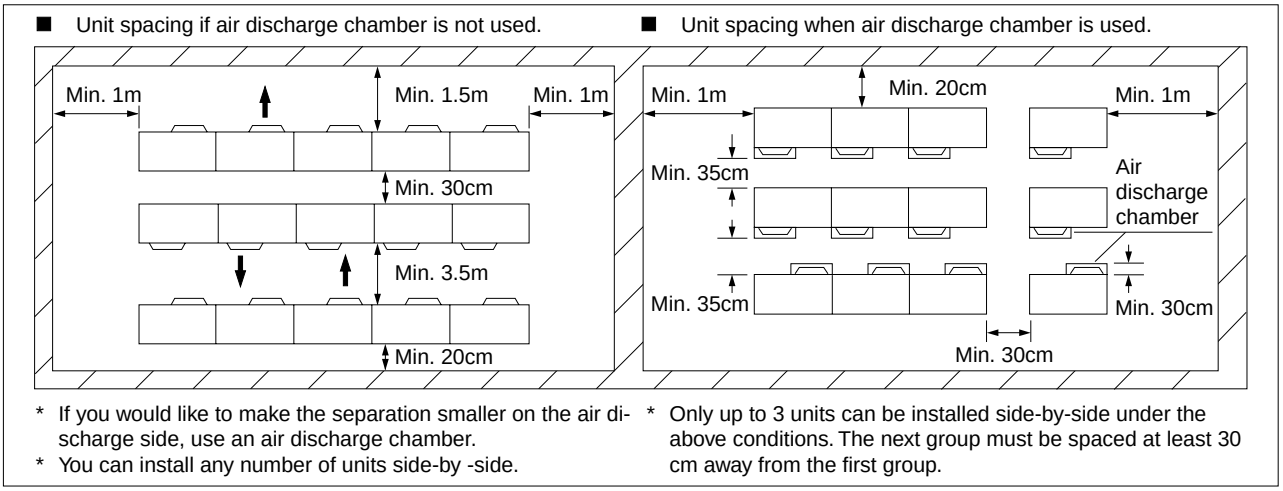

- provide a solid base (concrete block, 10 x 40 cm beams or equal), a minimum of 15 cm above ground level to reduce humidity and protect the unit against possible water damage and decreased service life.
- use lug bolts or equal to bolt down unit, reducing vibration and noise.

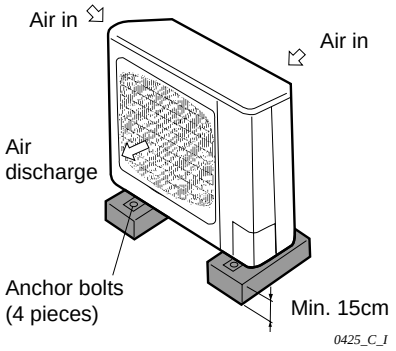

● **Shield for Upward Exhaust Discharge**

It is necessary for you to install an air discharge chamber (field supply) to direct exhaust from the fan upward if:

- it is difficult to provide a space of min. 50 cm between the air discharge outlet and a obstacle.
- the air discharge outlet faces a walkway where it may blow warm air onto passersby.
  Refer to Fig. right.

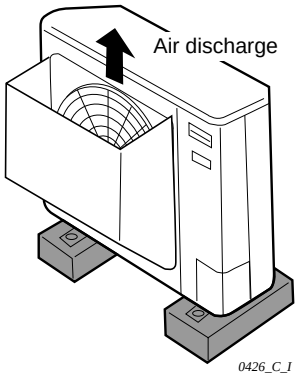

● **Wind Shield for low ambient models**

Important

It is recommended to use wind shields for models with "—L" inside model numbers. Low ambient models are designed to use in low outdoor temperature conditions.

General

When the outdoor unit is installed in a position exposed to strong wind (like seasonal winds with low air temperature in winter), wind shields must be installed on the outdoor unit.

This unit is designed so that the fan of the outdoor unit runs at low speed when the air conditioner is operated at low outdoor air temperatures. When the outdoor unit is exposed to wind, wind influences operating pressure and causes unstable operation such as activation of high pressure switch or freeze prevention.

Install a pair of wind shields at the front and back of the outdoor as required on the upwind side only or on both sides.

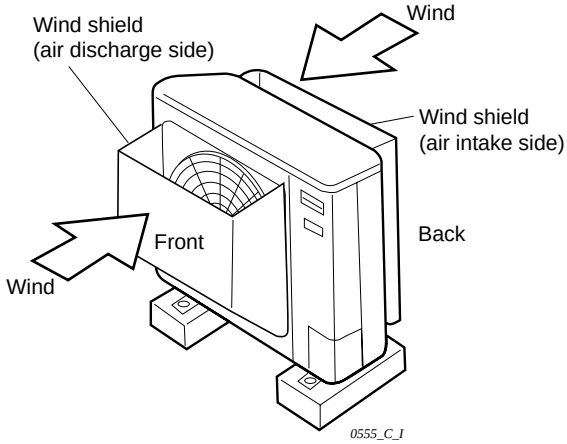

Recommended outer dimensions of wind shield (field supply)

* In snow areas, bottom plate should be removed.

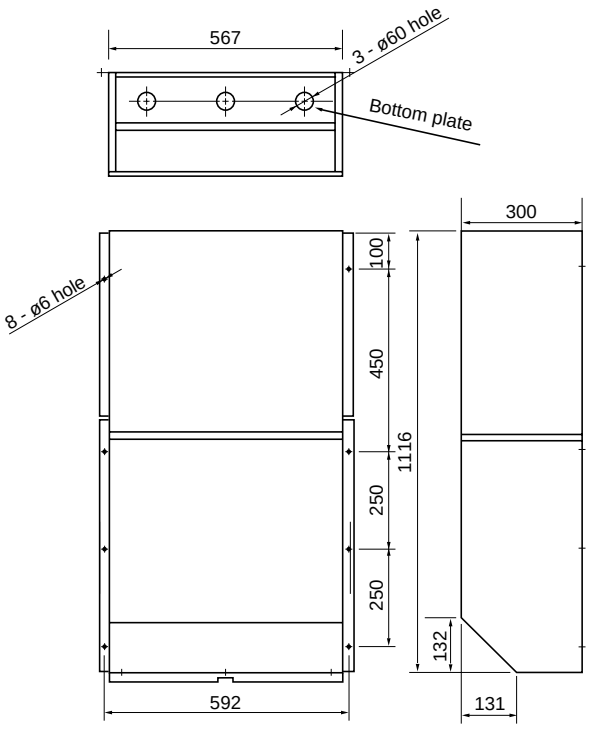

For 536, 548 type

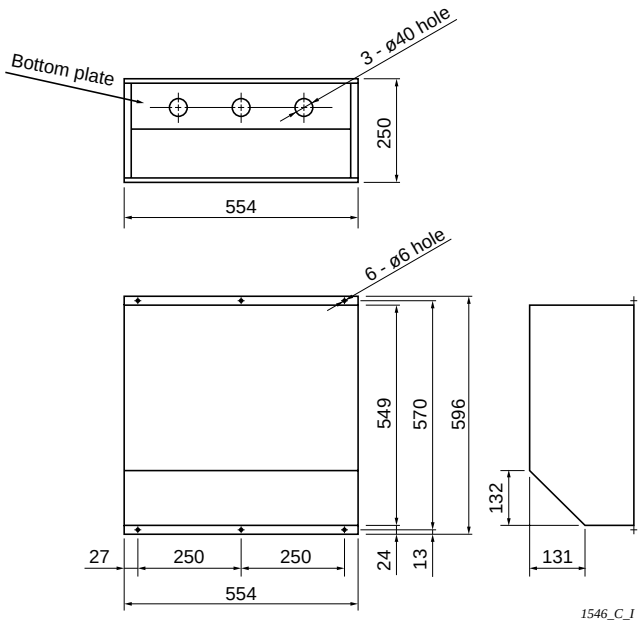

For 525 type

● Electrical Wiring

- **General Precautions on Wiring**

(1) Before wiring, confirm the rated voltage of the unit as shown on its nameplate, then carry out the wiring closely following the wiring diagram.

(2) Provide a power outlet to be used exclusively for each unit, and a power supply disconnect and circuit breaker for overcurrent protection should be provided in the exclusive line.

(3) To prevent possible hazards due to insulation failure, the unit must be grounded.

(4) Each wiring connection must be done in accordance with the wiring system diagram. Wrong wiring may cause the unit to misoperate or become damaged.

(5) Do not allow wiring to touch the refrigerant tubing, compressor, or any moving parts of the fan.

(6) Unauthorized changes in the internal wiring can be very dangerous. The manufacturer will accept no responsibility for any damage or misoperation that occurs as a result of such unauthorized changes.

(7) **If the respective phases of the 3-phase power wiring are not connected correctly, a reverse phase will occur and the compressor will not start running. If this happens, swap over 2 of the 3 phases (L1, L2, and L3).**

Regulations on wire diameters differ from locality to locality. For field wiring rules, please refer to your LOCAL ELECTRICAL CODES before beginning. You must insure that installation complies with all relevant rules and regulations.

(8) To prevent malfunction of the air conditioner caused by electrical noise, care must be taken when wiring as follows:

- The remote control wiring and the inter-unit control wiring should be wired apart from the inter-unit power wiring.
- It is recommended that shielded wires or twisted pair wires be used for the remote control and the inter-unit control wiring if the air conditioner is installed where it is exposed to the influence of electrical and/or electro-magnetic noise.

Recommended Wire Length and Wire Diameter for Power Supply System

Models			(A)*1 Power Supply 4 mm^2	(B)*1 Inter-unit Wiring 2.5 mm^2	Time Dealy Fuse or Circuit Capacity
Three-phase model	50 Hz	AER525	97 m	40 m	15 A
		AER536	60 m	50 m	15 A
		AER548	54 m	50 m	25 A
Single-phase model	50 Hz	AER525	17 m	40 m	40 A

*1 Refer to the Wiring System Diagrams for the meaning of “A”, “B”.
AWG = American Wire Gauge

NOTE

To access the electrical component box, open the air intake grille and remove the electrical component box cover.

● Wiring System Diagrams

Outdoor Unit : “—SC”, models
Single phase
50 Hz, 220 – 240 V

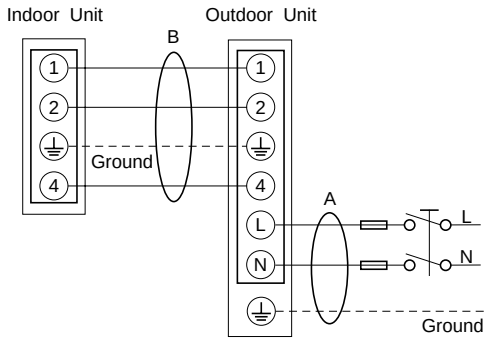

0560_M_I

Outdoor Unit : “—SC3E”, "—SCL3E" models
3-phase
50 Hz, 380 – 415 V

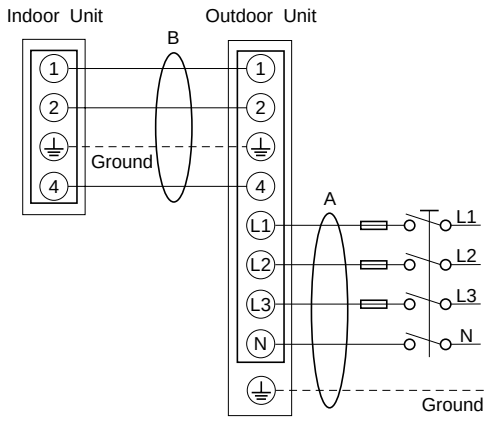

0561_M_I

NOTE

For accordance with conformity of EC Directive No. 89/336/EEC, supply connection at the time of installation work it should be consider guidance showing below.

* Do not share a common installation group with other equipment.
* Be sure that supply network impedance is sufficiently low ($|Z_{SYS}| \leqq$ RΩ).
  It may be necessary to consult the power supply authority before connection of the air conditioner to a low-voltage public network.

Models	RΩ	Remarks
AER525SC(L)3E	—	— Care is not needed
AER536SC(L)E3	0.192	Conforms to the local code
AER548SC(L)3E	0.167	Ditto
AER525SCE	0.126	Ditto

● Electrical characteristics

Indoor model : AS425C Outdoor model : AER525SCE

		Indoor Unit	Outdoor Unit		Complete Unit
		Fan Motor	Fan Motor	Compressor	
Performance at		220-240V / 1 phase / 50Hz		220-240V / 1 phase / 50Hz	
Rating conditions	A	0.6 / 0.63	0.62 / 0.65	12.1 / 12.3	13.32 / 13.58
	kW	0.13 / 0.15	0.13 / 0.15	2.5 / 2.64	2.76 / 2.94
Full load conditions	A	0.6 / 0.63	0.62 / 0.65	13.8 / 14.7	15.02 / 15.98
	kW	0.13 / 0.15	0.13 / 0.15	2.85 / 3.2	3.11 / 3.5
Starting amperes	A	1 / 1	1 / 1	67 / 73	69 / 75

Indoor model : AS425C Outdoor model : AER525SC(L)3E

		Indoor Unit	Outdoor Unit		Complete Unit
		Fan Motor	Fan Motor	Compressor	
Performance at		220-240V / 1 phase / 50Hz		380-415V / 3 phase / 50Hz	
Rating conditions	A	0.6 / 0.63	0.62 / 0.65	4.25 / 4.21	4.63 / 4.59
	kW	0.13 / 0.15	0.13 / 0.15	2.4 / 2.43	2.66 / 2.73
Full load conditions	A	0.6 / 0.63	0.62 / 0.65	5.38 / 5.25	5.75 / 5.62
	kW	0.13 / 0.15	0.13 / 0.15	3.02 / 3.02	3.28 / 3.32
Starting amperes	A	1 / 1	1 / 1	25 / 28	27 / 30

Indoor model : AS436C Outdoor model : AER536SC(L)3E

		Indoor Unit	Outdoor Unit		Complete Unit
		Fan Motor	Fan Motor	Compressor	
Performance at		220-240V / 1 phase / 50Hz		380-415V / 3 phase / 50Hz	
Rating conditions	A	0.92 / 0.93	1.24 / 1.31	6.35 / 6.39	7.01 / 7.05
	kW	0.20 / 0.22	0.26 / 0.29	3.46 / 3.51	3.92 / 4.02
Full load conditions	A	0.92 / 0.93	1.24 / 1.31	7.2 / 7.24	7.89 / 7.93
	kW	0.20 / 0.22	0.26 / 0.29	4.28 / 4.27	4.74 / 4.78
Starting amperes	A	2 / 2	3 / 3	42 / 45	47 / 50

Indoor model : AS448C Outdoor model : AER548SC(L)3E

		Indoor Unit	Outdoor Unit		Complete Unit
		Fan Motor	Fan Motor	Compressor	
Performance at		220-240V / 1 phase / 50Hz		380-415V / 3 phase / 50Hz	
Rating conditions	A	0.92 / 0.93	1.24 / 1.31	7.5 / 7.3	8.15 / 7.97
	kW	0.20 / 0.22	0.26 / 0.29	4.05 / 4.06	4.51 / 4.57
Full load conditions	A	0.92 / 0.93	1.24 / 1.31	8.8 / 8.6	9.47 / 9.28
	kW	0.20 / 0.22	0.26 / 0.29	4.92 / 4.94	5.38 / 5.45
Starting amperes	A	2 / 2	3 / 3	48 / 53	53 / 58

Rating Conditions : Indoor Air Temperature 27°C DB / 19°C WB
Outdoor Air Temperature 35°C DB
Rating Conditions : Indoor Air Temperature 35°C DB / 25°C WB
Outdoor Air Temperature 50°C DB

● Electrical characteristics

Indoor model : AC425C Outdoor model : AER525SCE

		Indoor Unit	Outdoor Unit		Complete Unit
		Fan Motor	Fan Motor	Compressor	
Performance at		220-240V / 1 phase / 50Hz		220-240V / 1 phase / 50Hz	
Rating conditions	A	0.43 / 0.43	0.62 / 0.65	12.1 / 12.3	13.15 / 13.38
	kW	0.09 / 0.1	0.13 / 0.15	2.5 / 2.64	2.72 / 2.89
Full load conditions	A	0.43 / 0.43	0.62 / 0.65	13.8 / 14.7	14.85 / 15.78
	kW	0.09 / 0.1	0.13 / 0.15	2.85 / 3.2	3.07 / 3.45
Starting amperes	A	1 / 1	1 / 1	67 / 73	69 / 75

Indoor model : AC425C Outdoor model : AER425SC(L)3E

		Indoor Unit	Outdoor Unit		Complete Unit
		Fan Motor	Fan Motor	Compressor	
Performance at		220-240V / 1 phase / 50Hz		380-415V / 3 phase / 50Hz	
Rating conditions	A	0.43 / 0.43	0.62 / 0.65	4.25 / 4.21	4.57 / 4.53
	kW	0.09 / 0.1	0.13 / 0.15	2.4 / 2.43	2.62 / 2.68
Full load conditions	A	0.43 / 0.43	0.62 / 0.65	5.38 / 5.25	5.7 / 5.57
	kW	0.09 / 0.1	0.13 / 0.15	3.02 / 3.02	3.24 / 3.27
Starting amperes	A	1 / 1	1 / 1	25 / 28	27 / 30

Indoor model : AC436C Outdoor model : AER536SC(L)3E

		Indoor Unit	Outdoor Unit		Complete Unit
		Fan Motor	Fan Motor	Compressor	
Performance at		220-240V / 1 phase / 50Hz		380-415V / 3 phase / 50Hz	
Rating conditions	A	0.95 / 0.98	1.24 / 1.31	6.35 / 6.39	7.01 / 7.06
	kW	0.2 / 0.22	0.26 / 0.29	3.46 / 3.51	3.92 / 4.02
Full load conditions	A	0.95 / 0.98	1.24 / 1.31	7.2 / 7.24	7.89 / 7.93
	kW	0.2 / 0.22	0.26 / 0.29	4.28 / 4.27	4.74 / 4.78
Starting amperes	A	2 / 2	3 / 3	42 / 45	47 / 50

Indoor model : AC448C Outdoor model : AER548SC(L)3E

		Indoor Unit	Outdoor Unit		Complete Unit
		Fan Motor	Fan Motor	Compressor	
Performance at		220-240V / 1 phase / 50Hz		380-415V / 3 phase / 50Hz	
Rating conditions	A	0.95 / 0.98	1.24 / 1.31	7.5 / 7.3	8.16 / 7.97
	kW	0.2 / 0.22	0.26 / 0.29	4.05 / 4.06	4.51 / 4.57
Full load conditions	A	0.95 / 0.98	1.24 / 1.31	8.8 / 8.6	9.47 / 9.28
	kW	0.2 / 0.22	0.26 / 0.29	4.92 / 4.94	5.38 / 5.45
Starting amperes	A	2 / 2	3 / 3	48 / 53	53 / 58

Rating Conditions : Indoor Air Temperature 27°C DB / 19°C WB
Outdoor Air Temperature 35°C DB
Rating Conditions : Indoor Air Temperature 35°C DB / 25°C WB
Outdoor Air Temperature 50°C DB

● Electrical characteristics

Indoor model : AD425CW Outdoor model : AER525SCE

		Indoor Unit	Outdoor Unit		Complete Unit
		Fan Motor	Fan Motor	Compressor	
Performance at		220-240V / 1 phase / 50Hz		220-240V / 1 phase / 50Hz	
Rating conditions	A	0.83 / 0.89	0.62 / 0.65	12.1 / 12.3	13.55 / 13.84
	kW	0.18 / 0.21	0.13 / 0.15	2.5 / 2.64	2.81 / 3
Full load conditions	A	0.83 / 0.89	0.62 / 0.65	13.8 / 14.7	15.25 / 16.24
	kW	0.18 / 0.21	0.13 / 0.15	2.85 / 3.2	3.16 / 3.56
Starting amperes	A	2 / 2	1 / 1	67 / 73	70 / 76

Indoor model : AD425CW Outdoor model : AER525SC(L)3E

		Indoor Unit	Outdoor Unit		Complete Unit
		Fan Motor	Fan Motor	Compressor	
Performance at		220-240V / 1 phase / 50Hz		380-415V / 3 phase / 50Hz	
Rating conditions	A	0.83 / 0.89	0.62 / 0.65	4.25 / 4.21	4.69 / 4.66
	kW	0.18 / 0.21	0.13 / 0.15	2.4 / 2.43	2.71 / 2.79
Full load conditions	A	0.83 / 0.89	0.62 / 0.65	5.38 / 5.25	5.82 / 5.69
	kW	0.18 / 0.21	0.13 / 0.15	3.02 / 3.02	3.33 / 3.38
Starting amperes	A	2 / 2	1 / 1	25 / 28	28 / 31

Indoor model : AD436CW Outdoor model : AER536SC(L)3E

		Indoor Unit	Outdoor Unit		Complete Unit
		Fan Motor	Fan Motor	Compressor	
Performance at		220-240V / 1 phase / 50Hz		380-415V / 3 phase / 50Hz	
Rating conditions	A	1.44 / 1.46	1.24 / 1.31	6.35 / 6.39	7.15 / 7.19
	kW	0.31 / 0.34	0.26 / 0.29	3.46 / 3.51	4.03 / 4.14
Full load conditions	A	1.44 / 1.46	1.24 / 1.31	7.2 / 7.24	8.05 / 8.07
	kW	0.31 / 0.34	0.26 / 0.29	4.28 / 4.27	4.85 / 4.9
Starting amperes	A	2 / 2	3 / 3	42 / 45	47 / 50

Indoor model : AD448CW Outdoor model : AER548SC(L)3E

		Indoor Unit	Outdoor Unit		Complete Unit
		Fan Motor	Fan Motor	Compressor	
Performance at		220-240V / 1 phase / 50Hz		380-415V / 3 phase / 50Hz	
Rating conditions	A	1.42 / 1.44	1.24 / 1.31	7.5 / 7.3	8.29 / 8.1
	kW	0.31 / 0.34	0.26 / 0.29	4.05 / 4.06	4.62 / 4.69
Full load conditions	A	1.42 / 1.44	1.24 / 1.31	8.8 / 8.6	9.61 / 9.42
	kW	0.31 / 0.34	0.26 / 0.29	4.92 / 4.94	5.49 / 5.57
Starting amperes	A	2 / 2	3 / 3	48 / 53	53 / 58

Rating Conditions : Indoor Air Temperature 27°C DB / 19°C WB
Outdoor Air Temperature 35°C DB
Rating Conditions : Indoor Air Temperature 35°C DB / 25°C WB
Outdoor Air Temperature 50°C DB

2. PROCESSES AND FUNCTIONS

2-1 Room Temperature Control ..... II - 2
2-2 Freeze Prevention ..... II - 3
2-3 Outdoor Fan Control ..... II - 3

2-1 Room Temperature Control

The unit adjusts the room temperature by turning the outdoor unit's compressor ON and OFF. This process is controlled by the **thermostat** located in the remote control unit. The figures on this and the next page show how each part of the system performs when the room temperature changes and the thermostat activates the compressor to start up (**thermo ON**) or shut down (**thermo OFF**). Fig. 2-1 shows the processes involved in the cooling cycle.

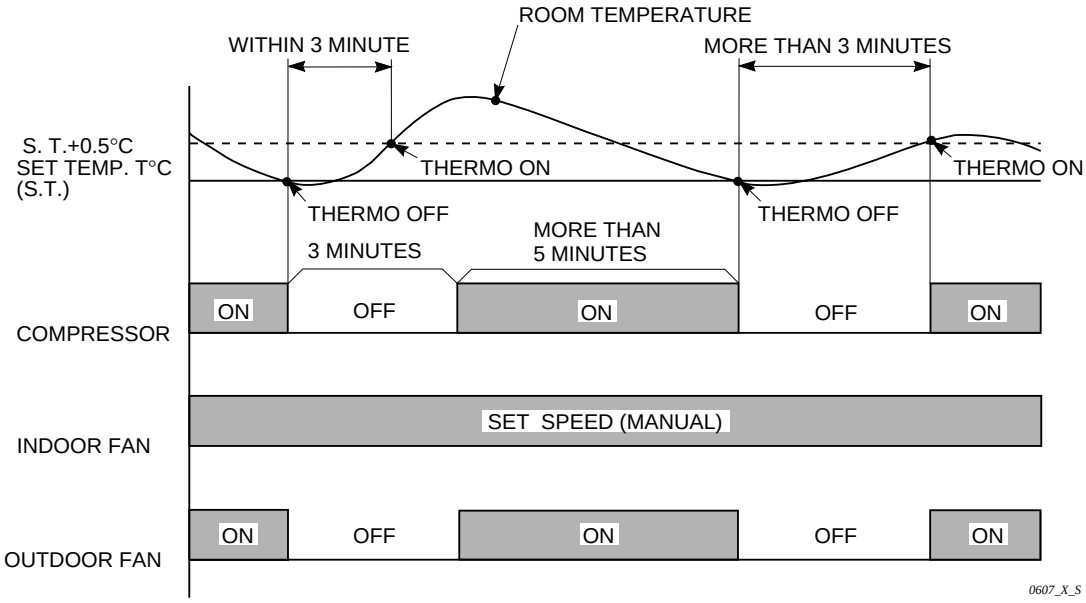

Fig. 2-1

Chart Summary and Explanations

- ❑ Once the compressor **starts** up it keeps running for 5 minutes.
- ❑ Once the compressor **shuts down**, it will not start up again for 3 minutes.
- ❑ If you **change** the operation mode during the cooling cycle, the control circuit will **stop** the compressor for 3 minutes.
- ❑ For 5 minutes after the compressor is first turned on and for 3 minutes after it is turned off, the compressor is not controlled by the room sensor.
- ❑ **Thermo ON:** When room the temperature rises 0.5 °C above the set temperature T°, (T°+0.5 °C):

  Compressor → **ON**
- ❑ **Thermo OFF**: When the room temperature is equal to or below the set temperature T°:

  Compressor → **OFF**

2-2 Freeze Prevention

Freeze prevention keeps the indoor heat exchange coil from freezing. Freezing reduces the efficiency of the unit, and frost buildup on the coil blocks the circulation of cool air from the indoor unit's fan.

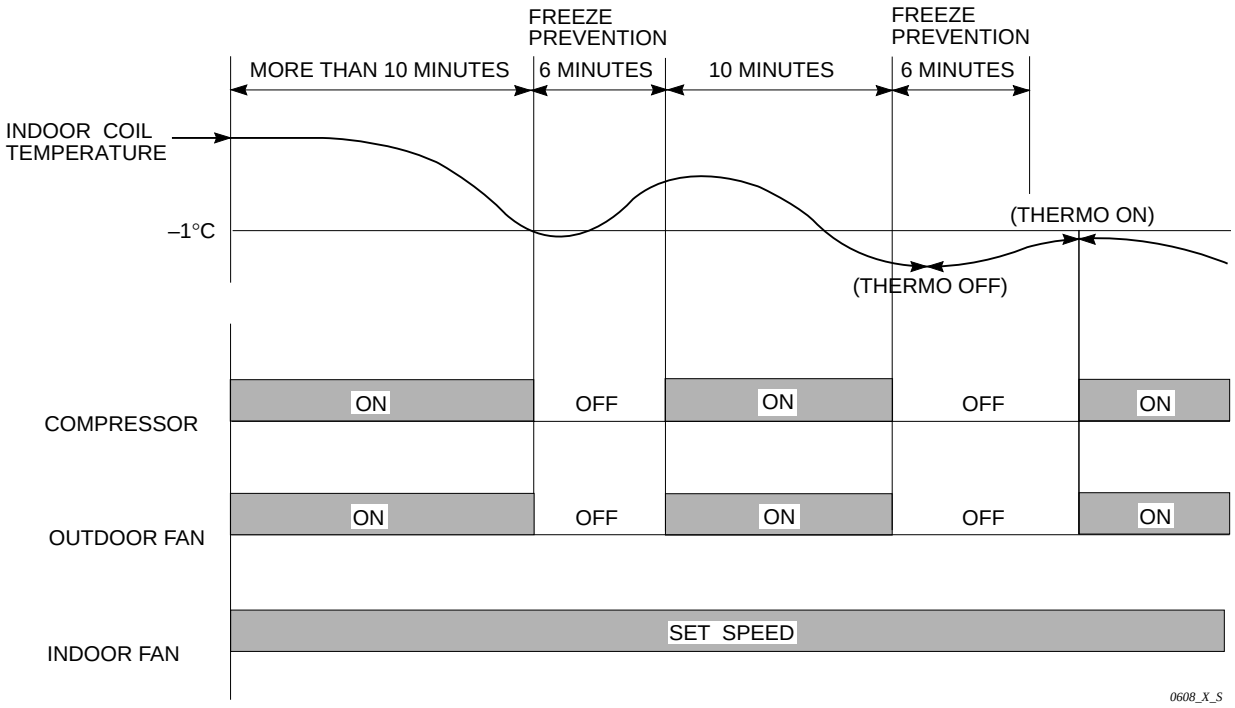

Fig. 2-2

2-3 Outdoor Fan Control

EL Type

- After the compressor is switched from off to on, the fan motor operates for five seconds at H or H+H speed. Regarding 36/48 type, when the fan speed is switched from H+H to L+L, the fan motor operates through M+M speed for five seconds.)
  Then, the fan speed is controlled in the following way based on the outside temperature (Ti) immediately after the compressor is switched from off to on.

25 Type

Fan speed	Ti
H	29°C or more
M	18°C or more
L	10°C or more
L+Shut off valve	less than 10°C

36 Type

Fan speed	Ti
H+H	29°C or more
M+M	20°C or more
L+L	8°C or more
M+Stop	less than 8°C

48 Type

Fan speed	Ti
H+H	27°C or more
M+M	12°C or more
L+L	–2°C or more
M+Stop	less than –2°C

- The fan speed is controlled in the following way based on the coil temperature (Tc) when compressor runs continuously at ON.

SPW-CR254EL8 type

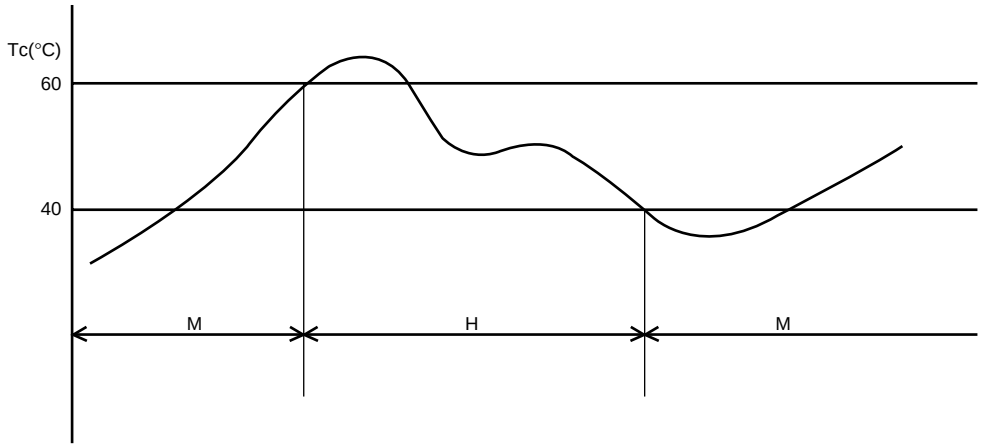

- When Tc reaches 60°C or more, the current fan speed is increased by one step.
- When Tc reaches 40°C or less, the current fan speed is decreased by one step.

SPW-CR364EL8 type

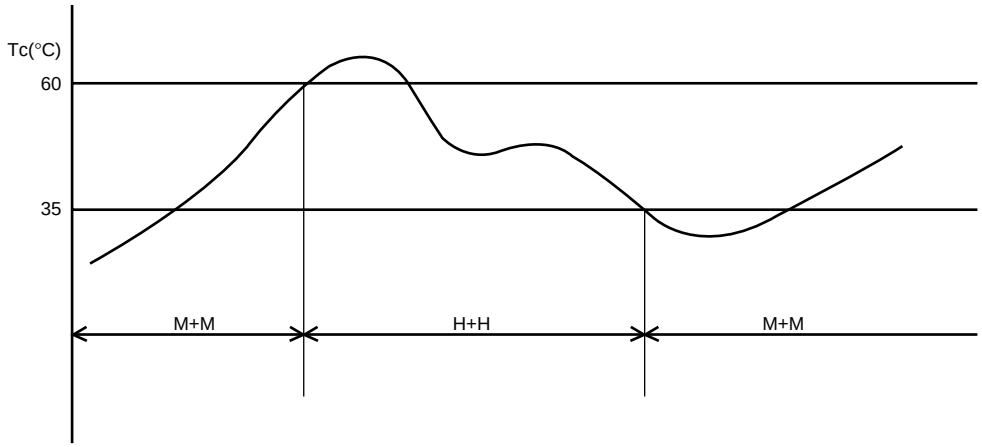

- When Tc reaches 60°C or more, the current fan speed is increased by one step.
- When Tc reaches 35°C or less, the current fan speed is decreased by one step.

SPW-CR484EL8 type

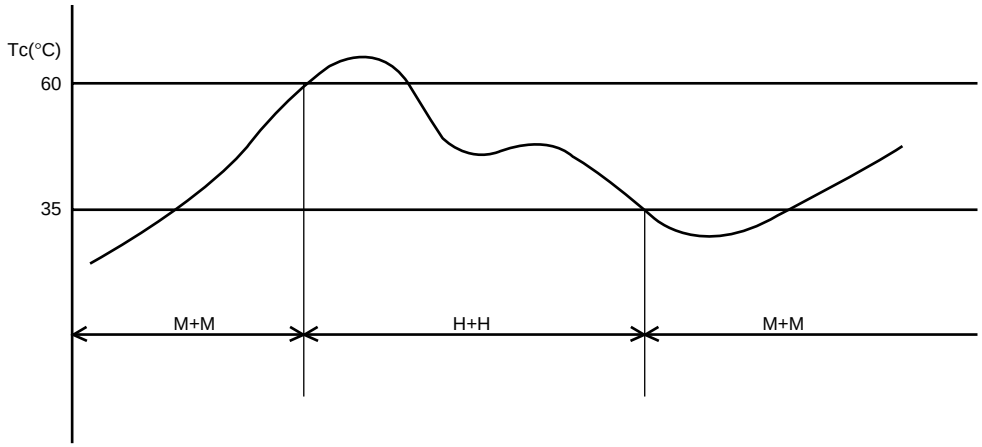

- When Tc reaches 60°C or more, the current fan speed is increased by one step.
- When Tc reaches 35°C or less, the current fan speed is decreased by one step.

- Increases in fan speed are performed every minute after the fan speed changes.
- Decreases in fan speed are performed every five minutes after the fan speed changes.
- After the compressor is switched from on to off, the fan motor operates for 2 minutes 55 seconds at H or H+H speed.

E Type

- In low outdoor temperatures, the outdoor fan is set automatically from HIGH to LOW to prevent the indoor heat exchanger from freezing.
- When the outdoor temperature is less than 25.5°C, the outdoor fan is set from HIGH to LOW automatically. When the outdoor temperature is 27.5°C or more, the outdoor fan is set from LOW to HIGH automatically.

3. ELECTRICAL DATA

3-1 Indoor Units (Electric Wiring Diagram, Schematic Diagram) ..... III - 2
4-Way Air Discharge Semi-concealed Type ..... III - 2
Ceiling Mounted Type ..... III - 6
Concealed Duct Type ..... III - 10
Concealed Duct High Static Pressure Type ..... III - 12
3-2 Outdoor Units (Electric Wiring Diagram, Schematic Diagram) ..... III - 18

① AS425C, AS436C, AS448C

• Electric Wiring Diagram

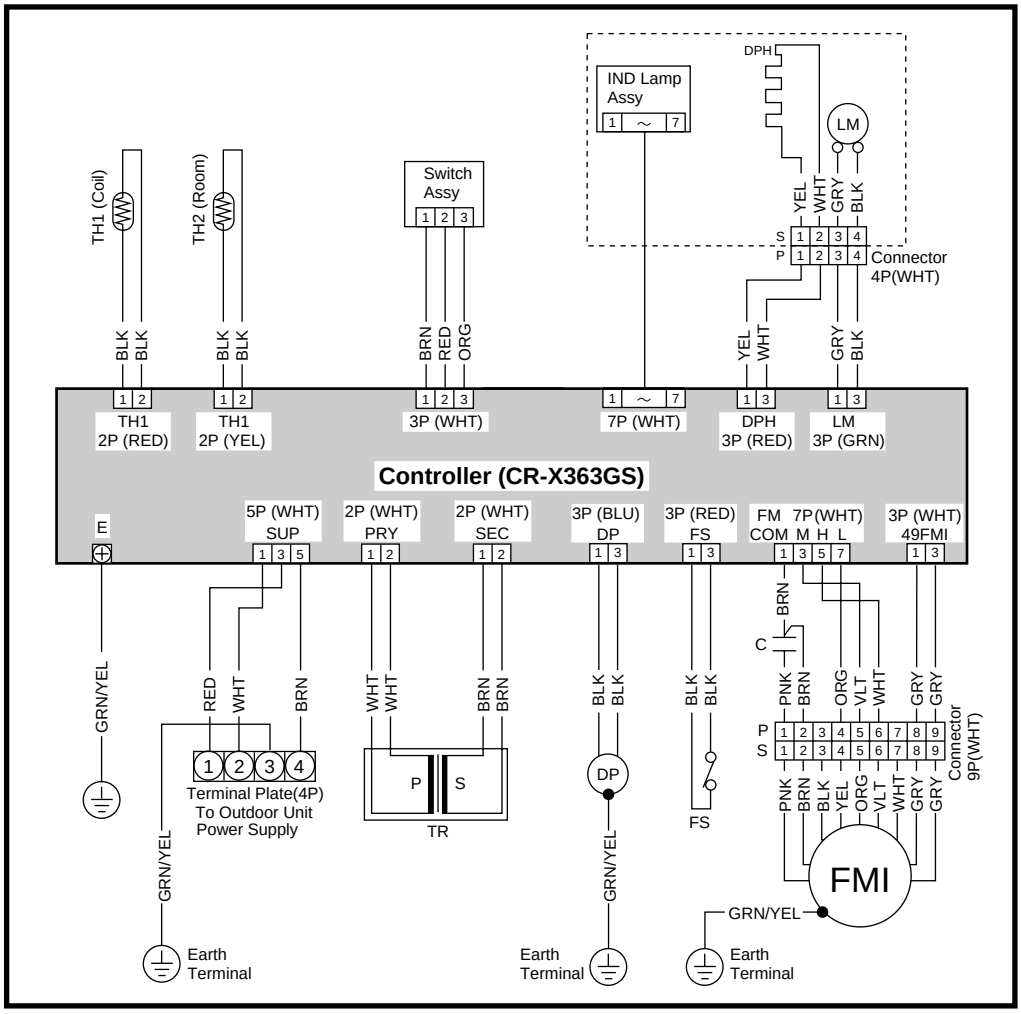

Ⓦ854-2-5268-495-00-2 (X253GS56, X363GS56, X483GS56)

① AS425C, AS436C, AS448C

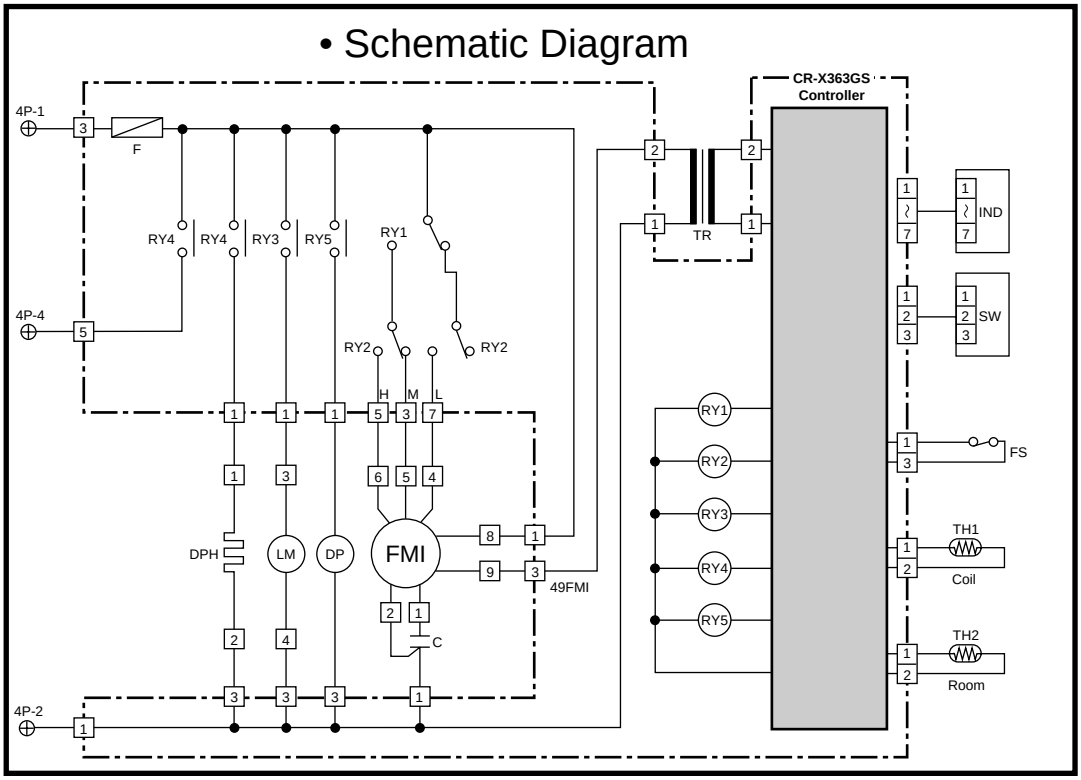

Symbols	Description	Symbols	Description
FMI	Indoor Fan Motor	CR-X363GS	Indoor Controller
49FMI	Indoor Motor Thermal Protector	RCS	Remote Control Switch
C	Capacitor	⊕	Terminal Plate
F	Fuse	□	Connector
DP	Drain Pump	⊕	Terminal
DPH	Dew Proof Heater		
LM	Auto Louver Motor		
TR	Power Transformer		
RY1-5	Auxiliary Relay		
FS	Float Switch		
TH1	Thermistor (Indoor Coil)		
TH2	Room Thermistor		

Ⓢ854-2-5268-495-00-2 (X253GS56, X363GS56, X483GS56)

② AC425C, AC436C, AC448C

• Electric Wiring Diagram

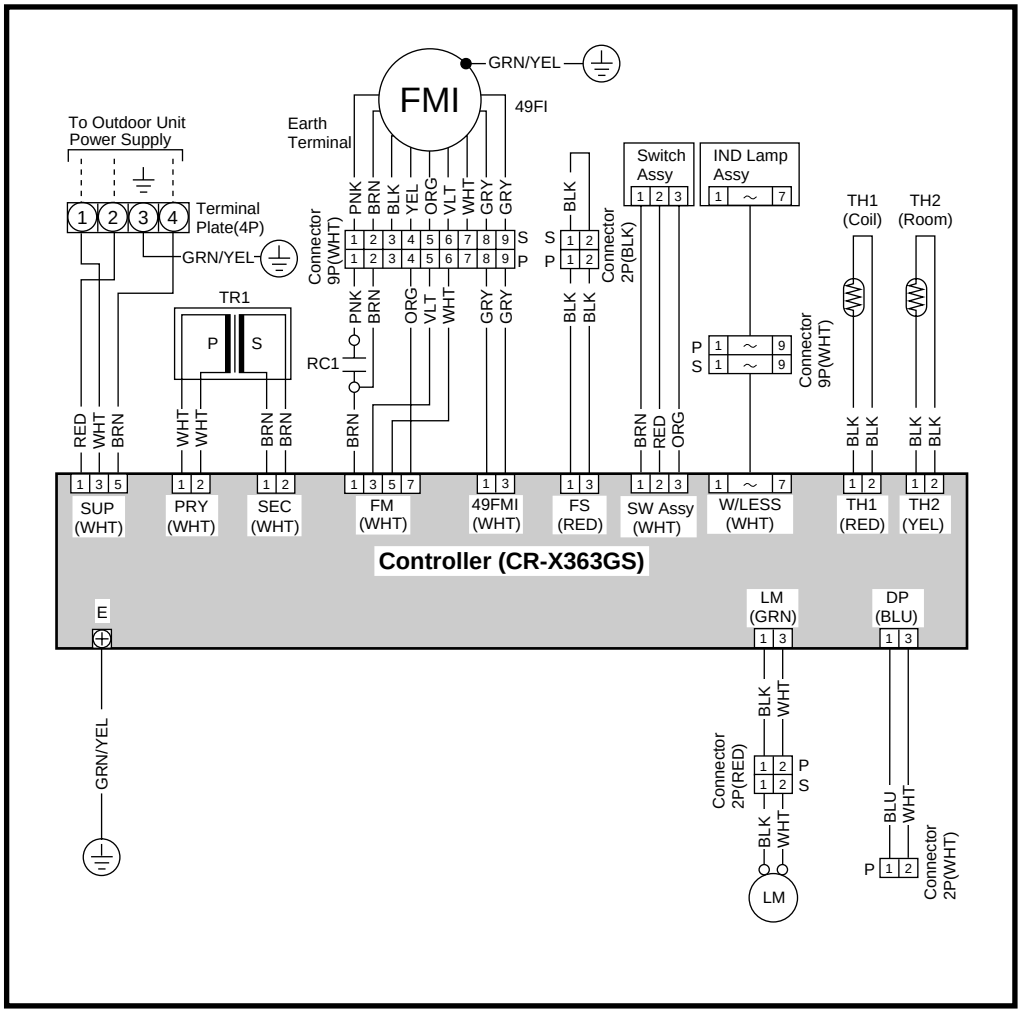

Ⓦ854-2-5268-667-00-0 (T253GSN56, T363GSN56, T483GSN56)

② AC425C, AC436C, AC448C

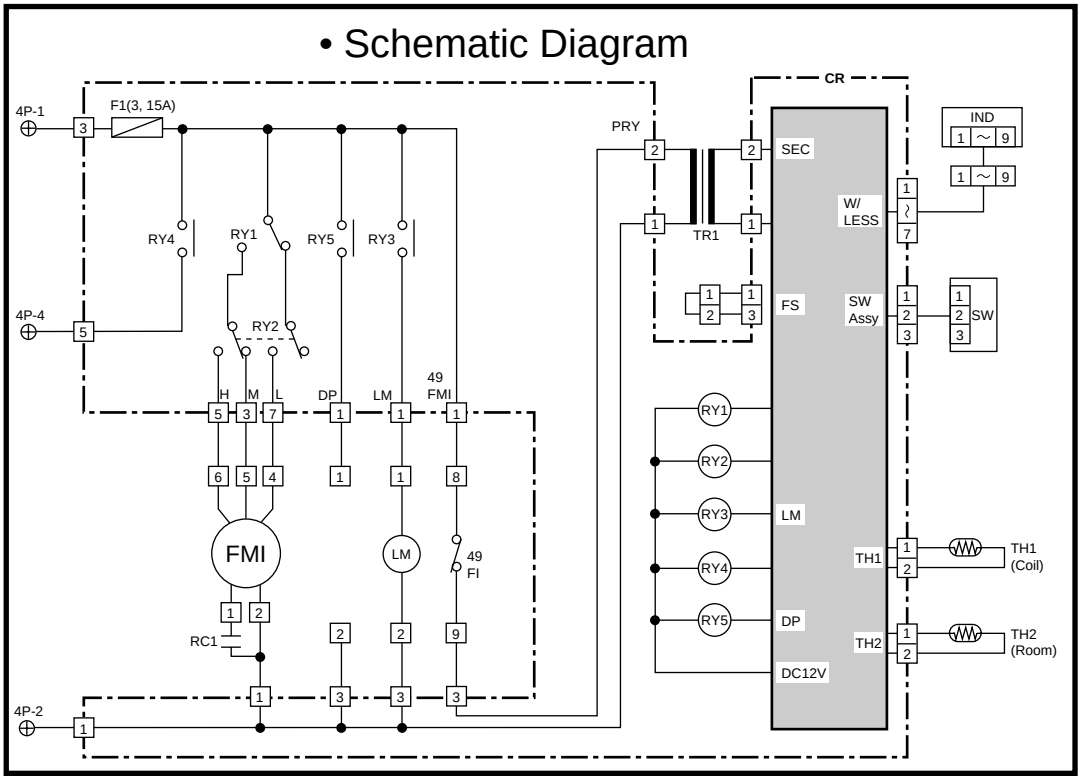

Symbols	Description	Symbols	Description
FMI	Indoor Fan Motor	IND	Indicator Lamp Assy
49FMI	Indoor Motor Thermal Protector	SW	Switch Assy
RC1	Running Capacitor	⊕	Terminal Plate
TR1	Power Transformer	□	Connector
LM	Auto Louver Motor	⊕	Terminal
TH1	Thermistor (Indoor Coil)		
TH2	Room Thermistor		
F1	Fuse		
RY1-RY5	Auxiliary Relay		
CR	Indoor Controller		

Ⓢ854-2-5268-667-00-0 (T253GSN56, T363GSN56, T483GSN56)

③ AD425CW, AD436CW, AD448CW

• Electric Wiring Diagram

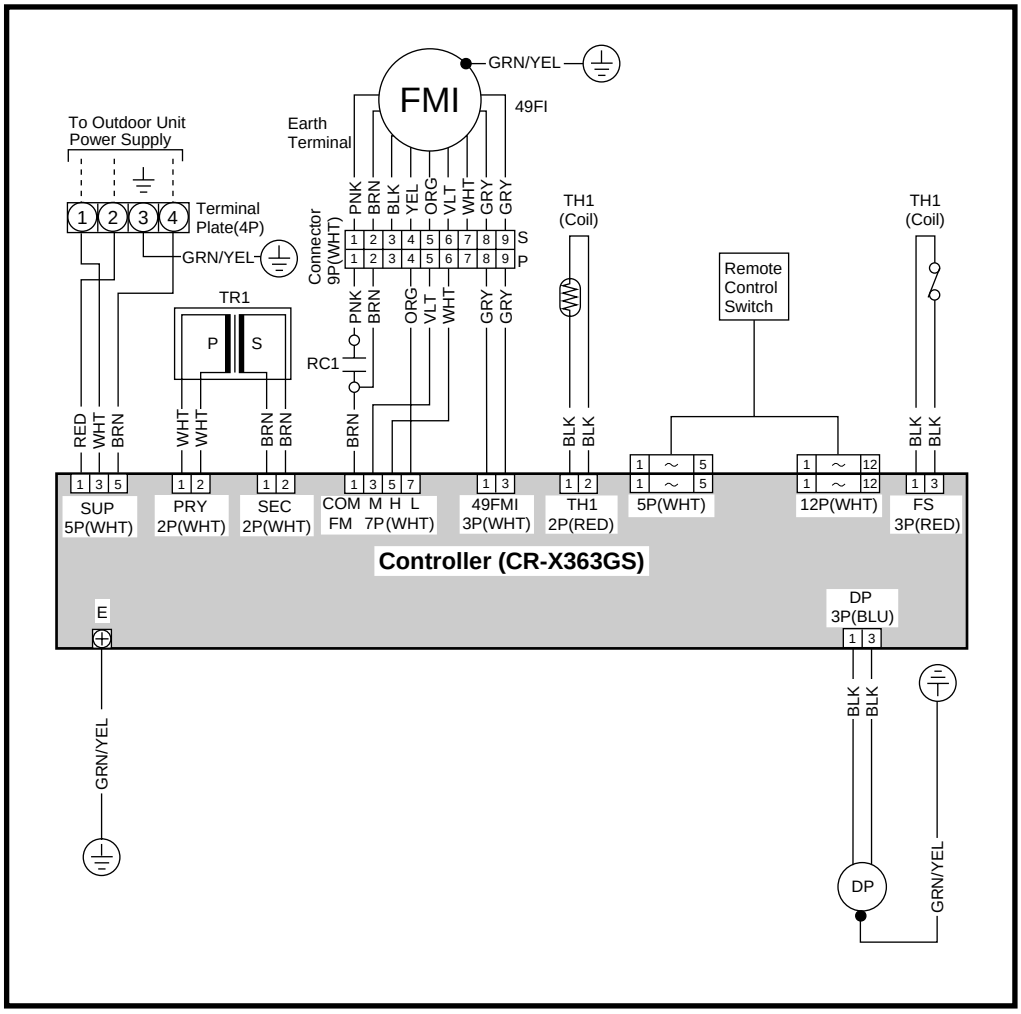

Ⓦ854-2-5268-898-00-0 (U253GN56)

③ AD425CW, AD436CW, AD448CW

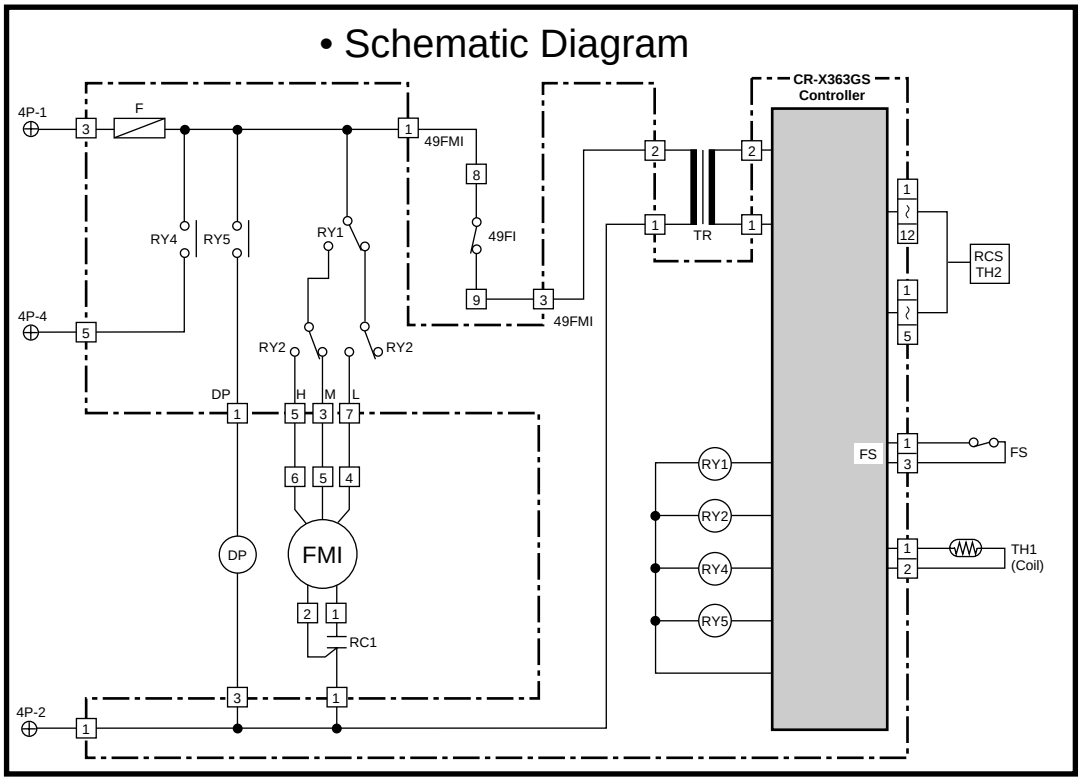

Symbols	Description	Symbols	Description
FMI	Indoor Fan Motor	CR-X363GS	Indoor Controller
49FI	Indoor Motor Thermal Protector	RCS	Remote Control Switch
RC1	Running Capacitor	⊕	Terminal Plate
F	Fuse	□	Connector
DP	Drain Pump	⊕	Terminal
FS	Float Switch		
TR	Power Transformer		
RY1, 2, 4, 5	Auxiliary Relay		
TH1	Thermistor (Indoor Coil)		
TH2	Room Thermistor		

Ⓢ 854-2-5268-898-00-0 (U253GN56)

3-2 Outdoor Units

① AER525SCE

• Electric Wiring Diagram

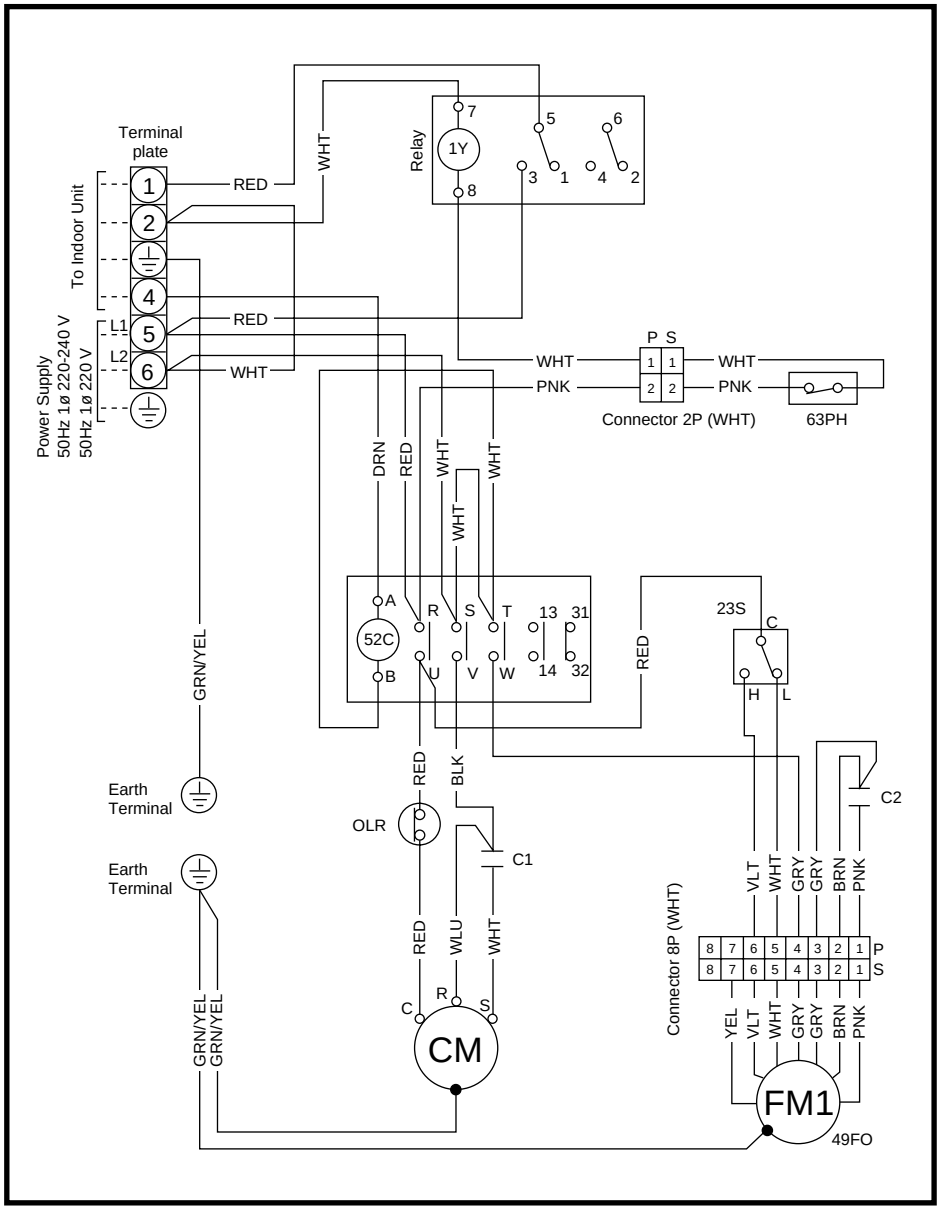

Ⓦ854-2-5269-069-00-0

3-2 Outdoor Units

① AER525SCE

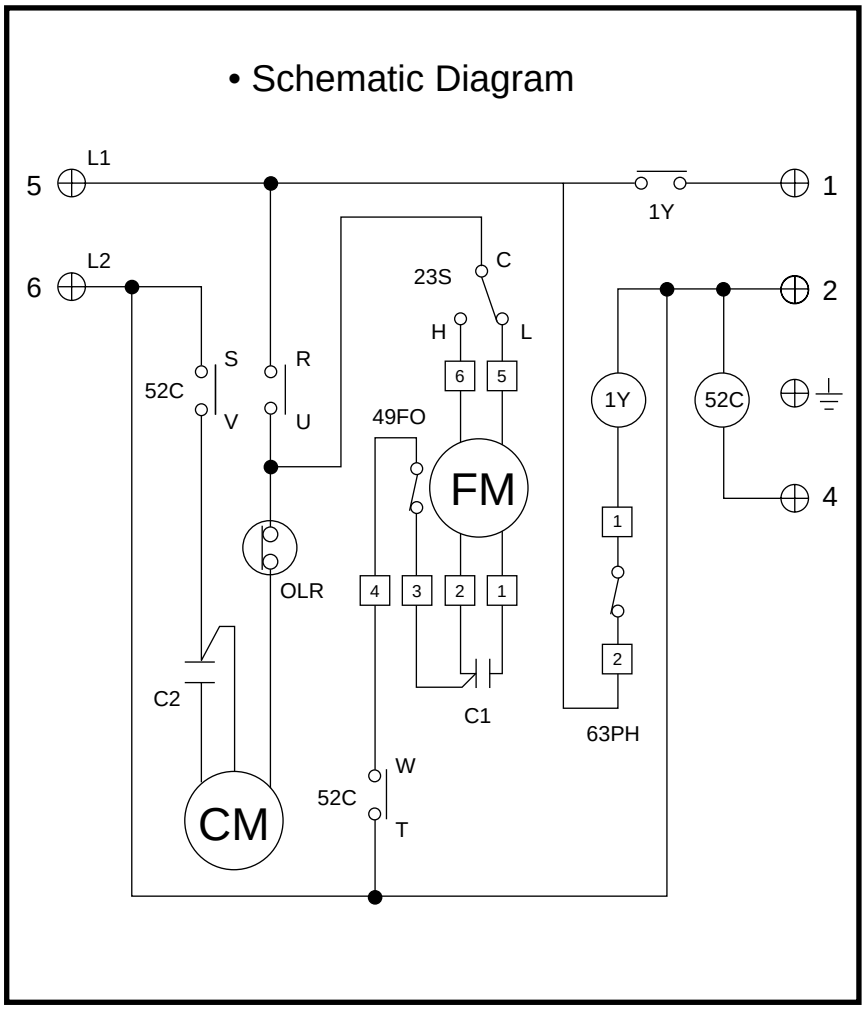

Symbols	Description
CM	Compressor motor
FM	Fan Motor
49FO	Outdoor Fan Motor Thermal Protector
52C	Compressor Motor Magnetic Contactor
63PH	High Pressure Switch
23S	Fan Speedcontrol Thermostat
C1, 2	Capacitor
1Y	Auxiliary Relay
□	Connector
⊕	Terminal Plate

Ⓢ 854-2-5269-069-00-0

② **AER525SC3E**

• Electric Wiring Diagram

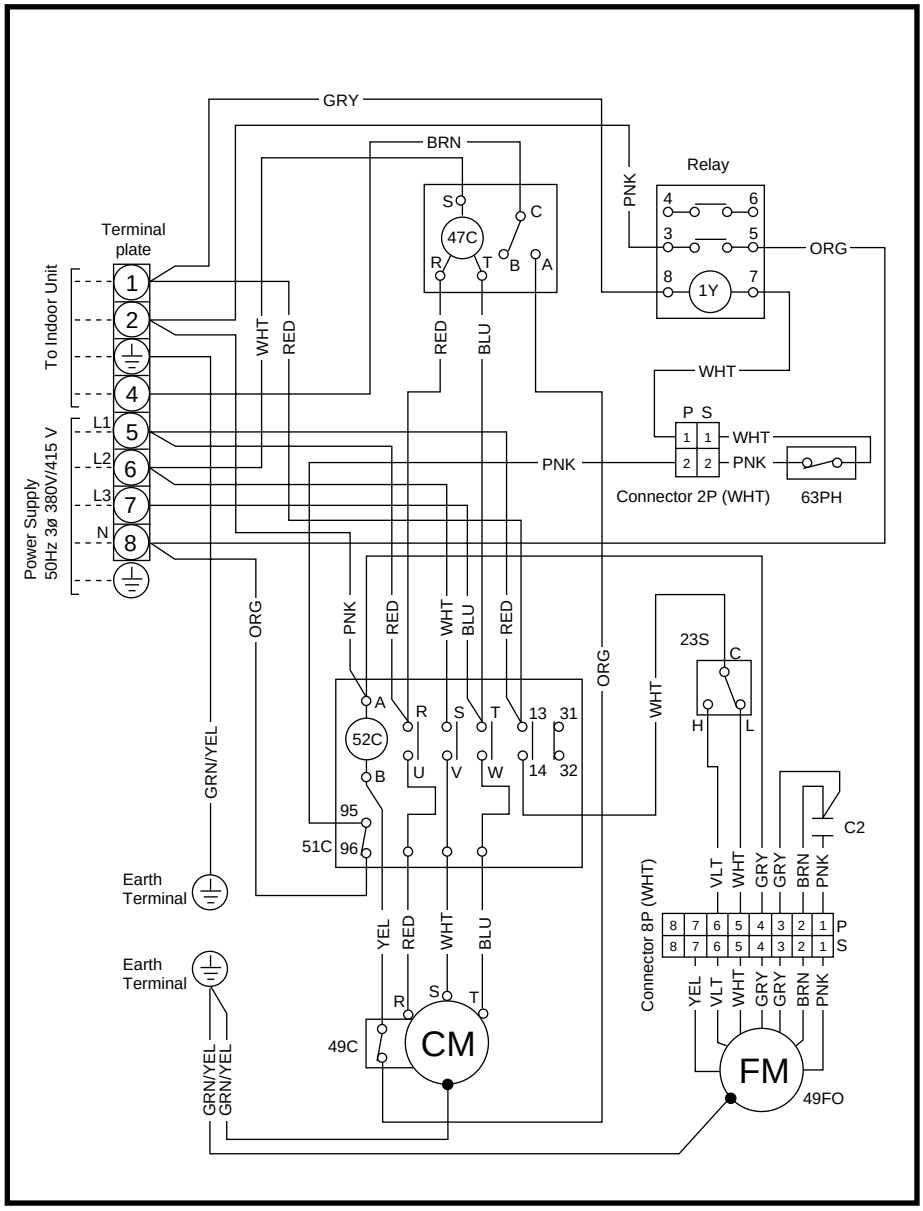

Ⓦ854-2-5269-070-00-0

3-2 Outdoor Units

② AER525SC3E

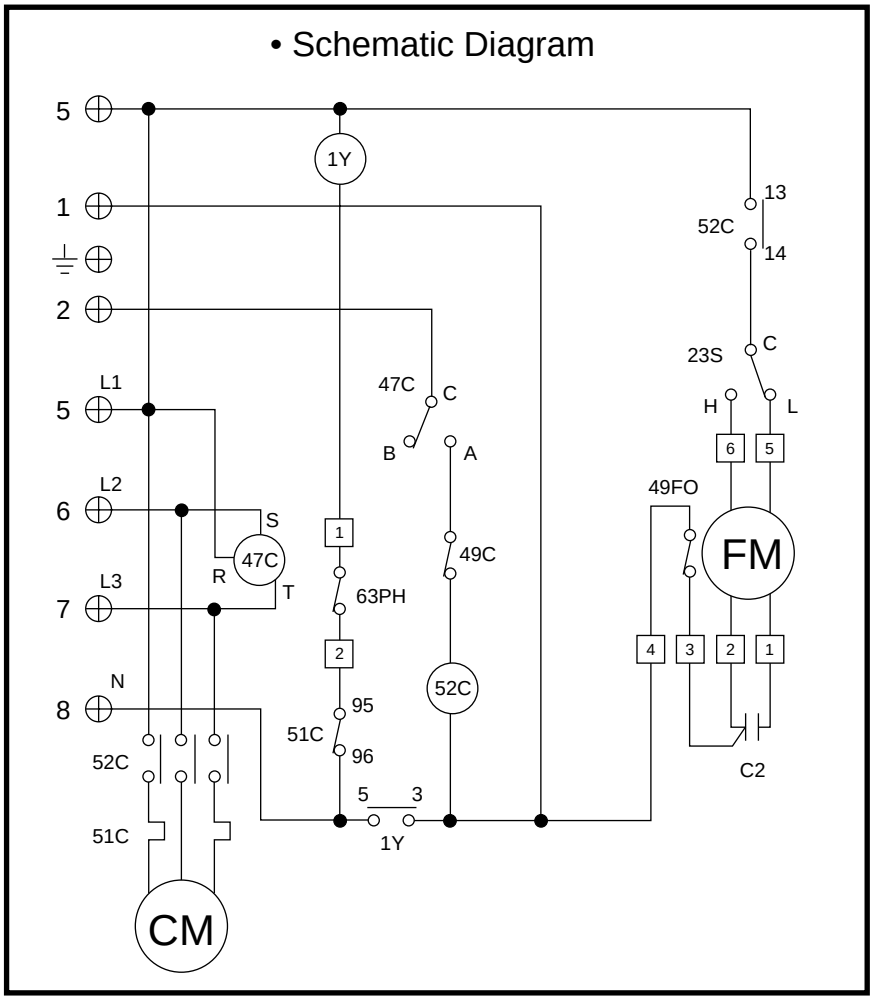

Symbols	Description
CM	Compressor motor
FM	Fan Motor
49FO	Outdoor Fan Motor Thermal Protector
52C	Compressor Motor Magnetic Contactor
51C	Compressor Motor Overcurrent Relay
49C	Compressor Motor Thermal Protector
47C	Negative Phase Relay
63PH	High Pressure Switch
23S	Fan Speedcontrol Thermostat
C2	Capacitor
1Y	Auxiliary Relay
□	Connector
⊕	Terminal Plate

Ⓢ 854-2-5269-070-00-0

③ AER525SCL3E

• Electric Wiring Diagram

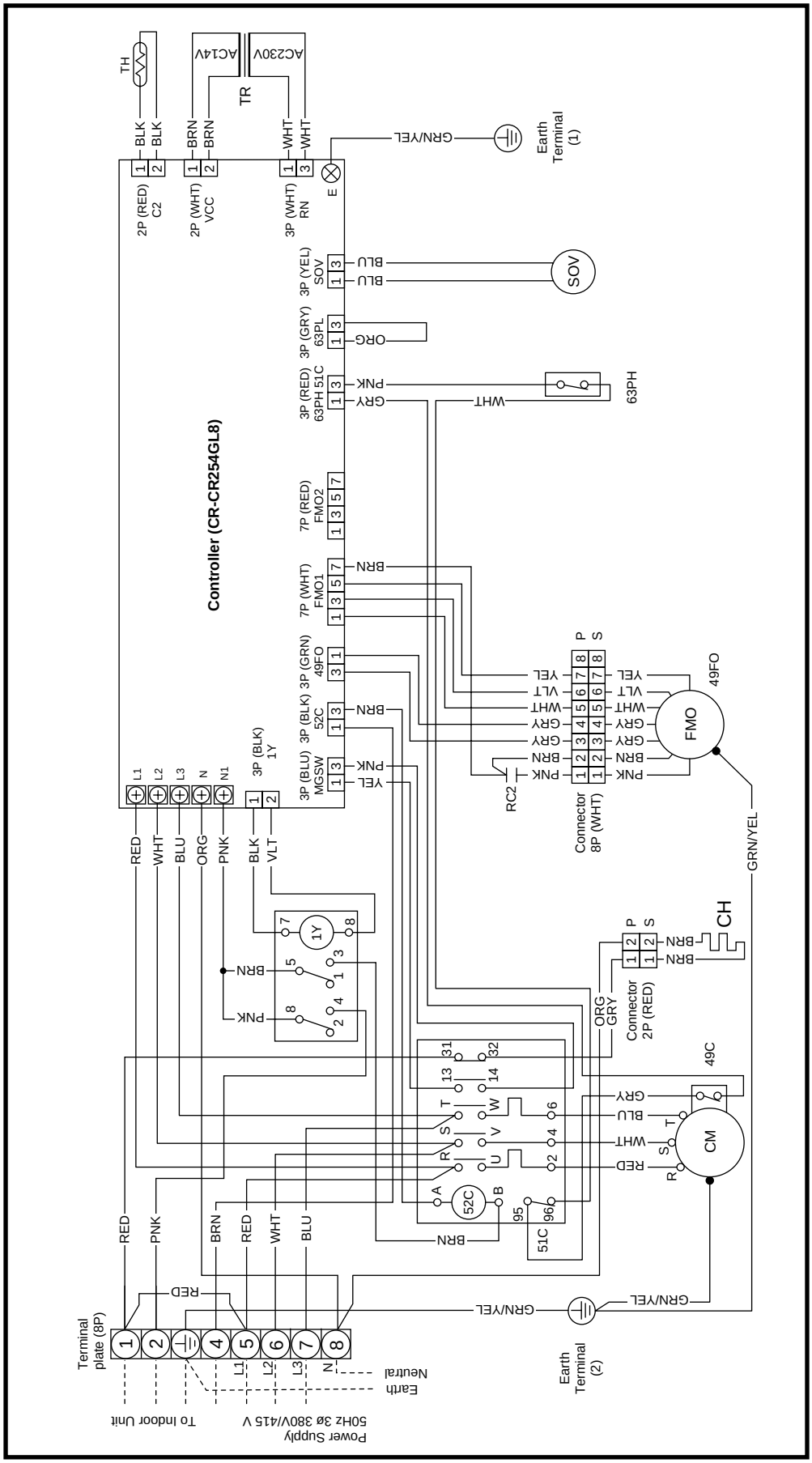

854-2-5269-045-00-1

③ AER525SCL3E

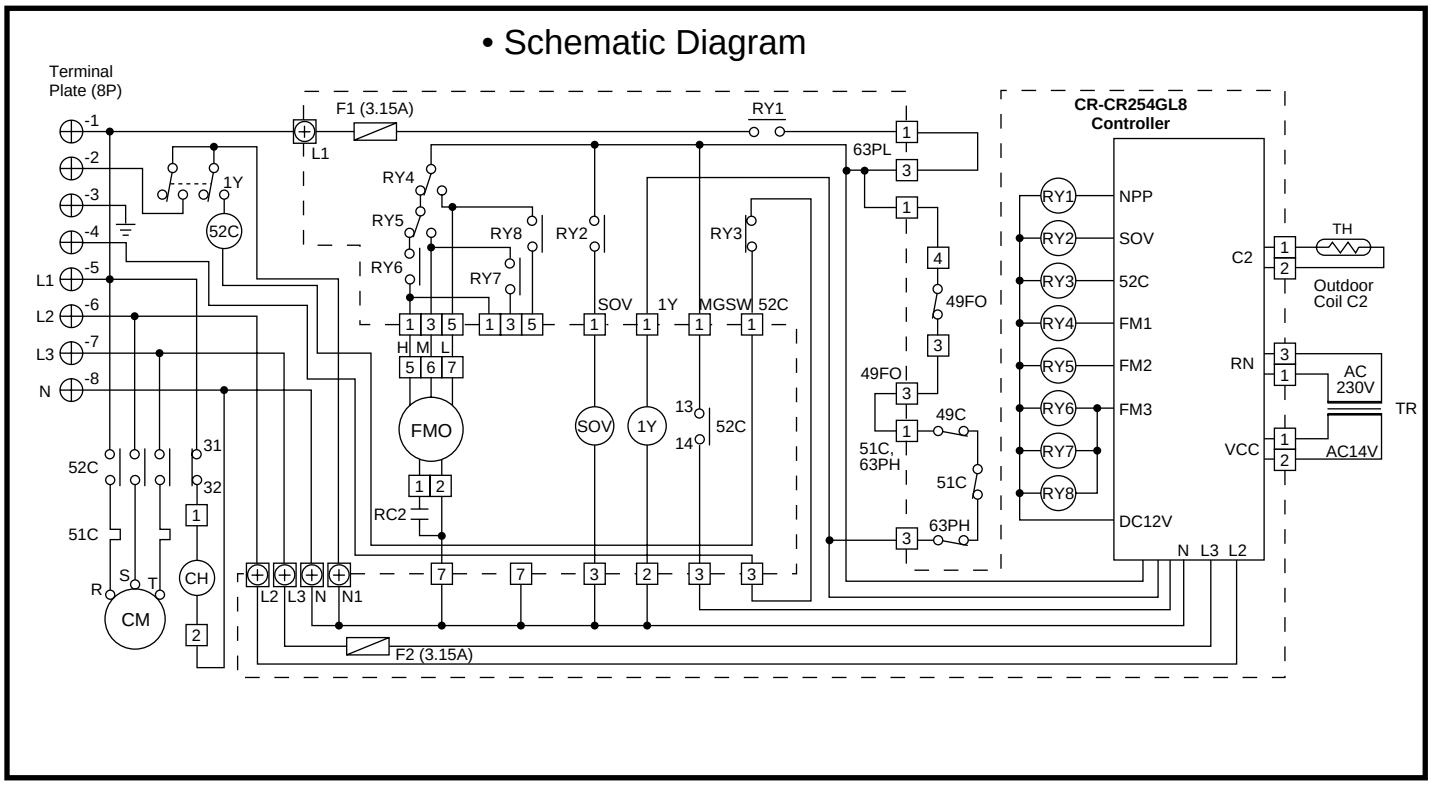

Ⓢ854-2-5269-045-00-1

Symbols	Description
CM	Compressor motor
CH	Crankcase Heater
FMO	Outdoor Fan Motor
52C	Compressor Motor Magnetic Contactor
49FO	Outdoor Fan Motor Thermal Protector
49C	Compressor Motor Thermal Protector
51C	Compressor Motor Overcurrent Relay
63PH	High Pressure Switch
SOV	Shut Off Valve
TR	Power Transformer
TH	Thermistor (Outdoor Coil C2)
RC2	Running Capacitor
RY1~8, 1Y	Auxiliary Relay
F1, 2	Fuse
⊕	Terminal Base
□	Connector
⊕	Terminal

③ AER536SC3E, AER548SC3E

• Electric Wiring Diagram

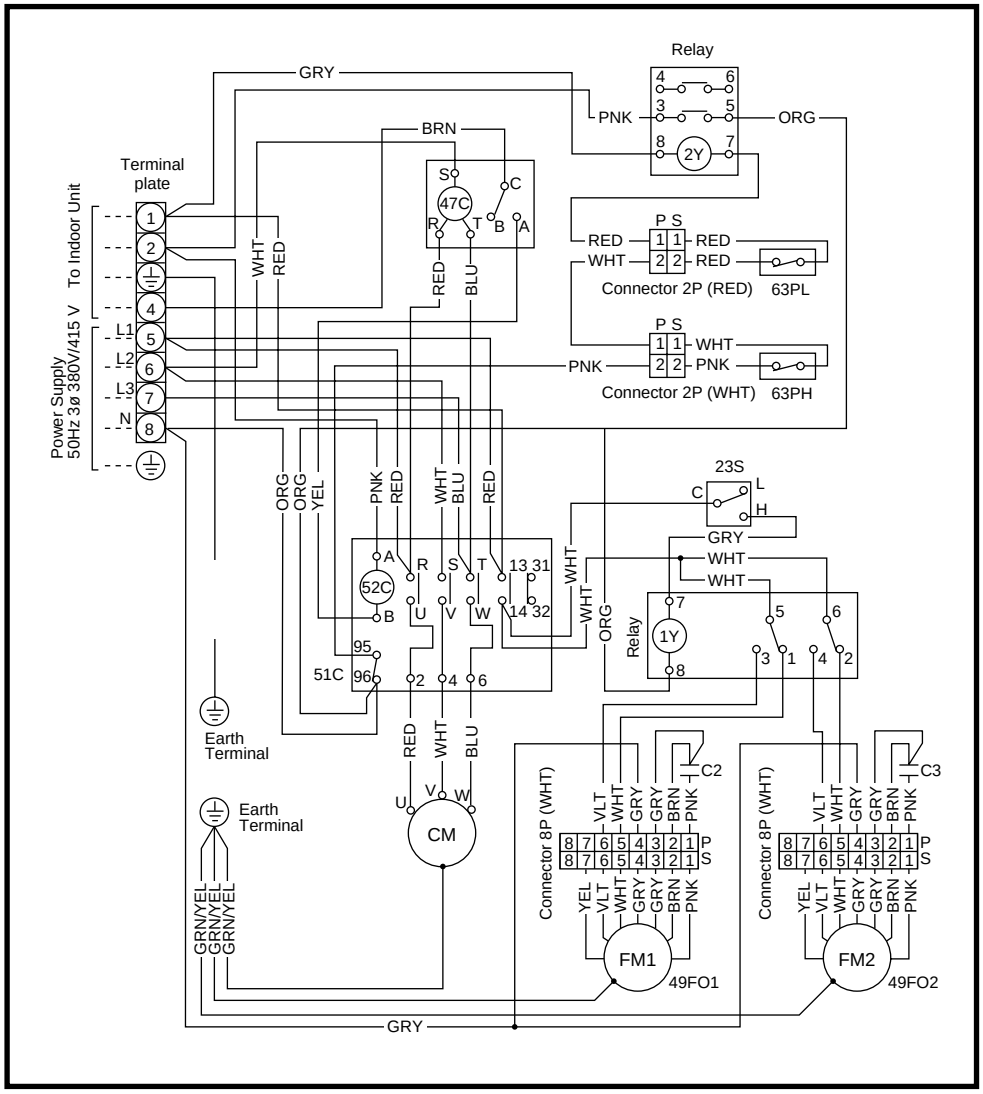

Ⓦ854-2-5269-071-00-0

③ AER536SC3E, AER548SC3E

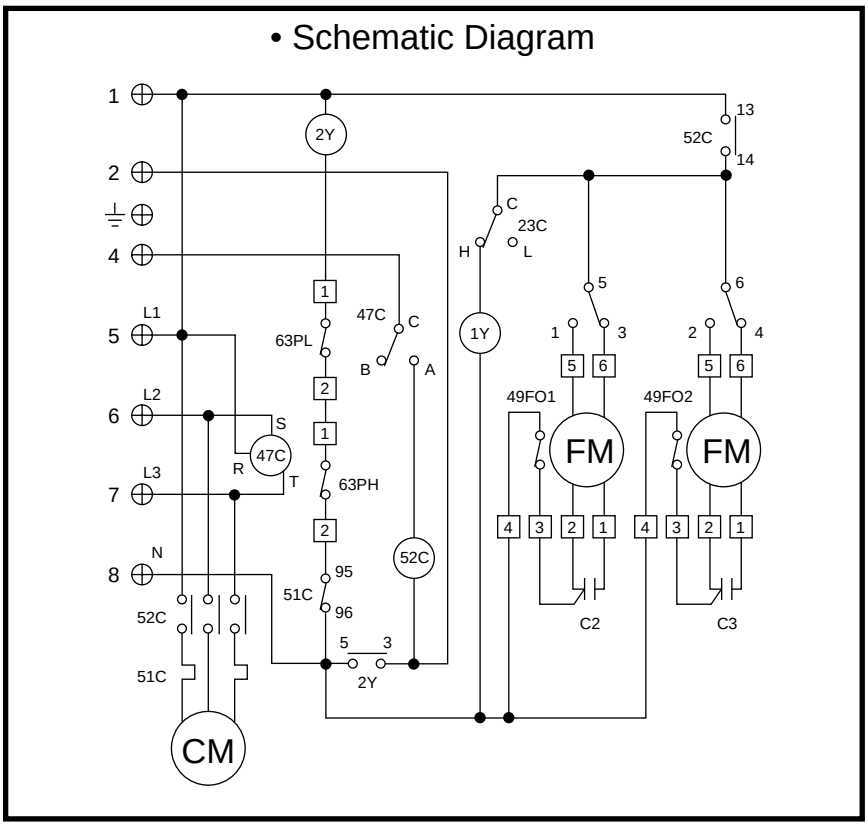

Ⓢ854-2-5269-071-00-0

Symbols	Description
CM	Compressor motor
FM1, 2	Fan Motor
49FO1, 2	Outdoor Fan Motor Thermal Protector
52C	Compressor Motor Magnetic Contactor
51C	Compressor Motor Overcurrent Relay
47C	Negative Phase Relay
63PH	High Pressure Switch
63PL	Low Pressure Switch
23S	Fan Speed Control Thermostat
C2, 3	Capacitor
1Y, 2Y	Auxiliary Relay
□	Connector
⊕	Terminal Plate

③ AER536SCL3E, AER548SCL3E

• Electric Wiring Diagram

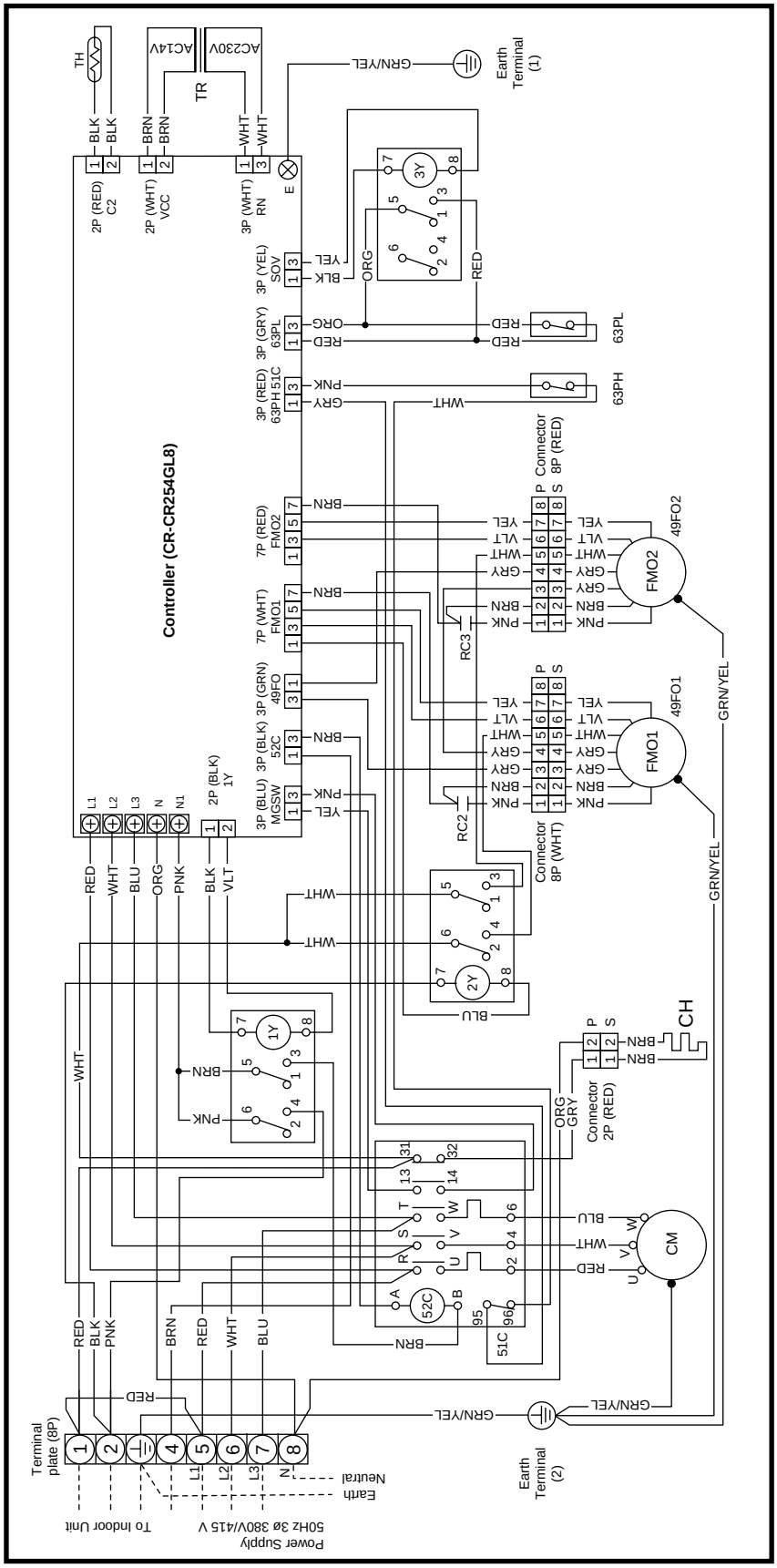

854-2-5269-046-00-1

③ AER536SCL3E, AER548SCL3E

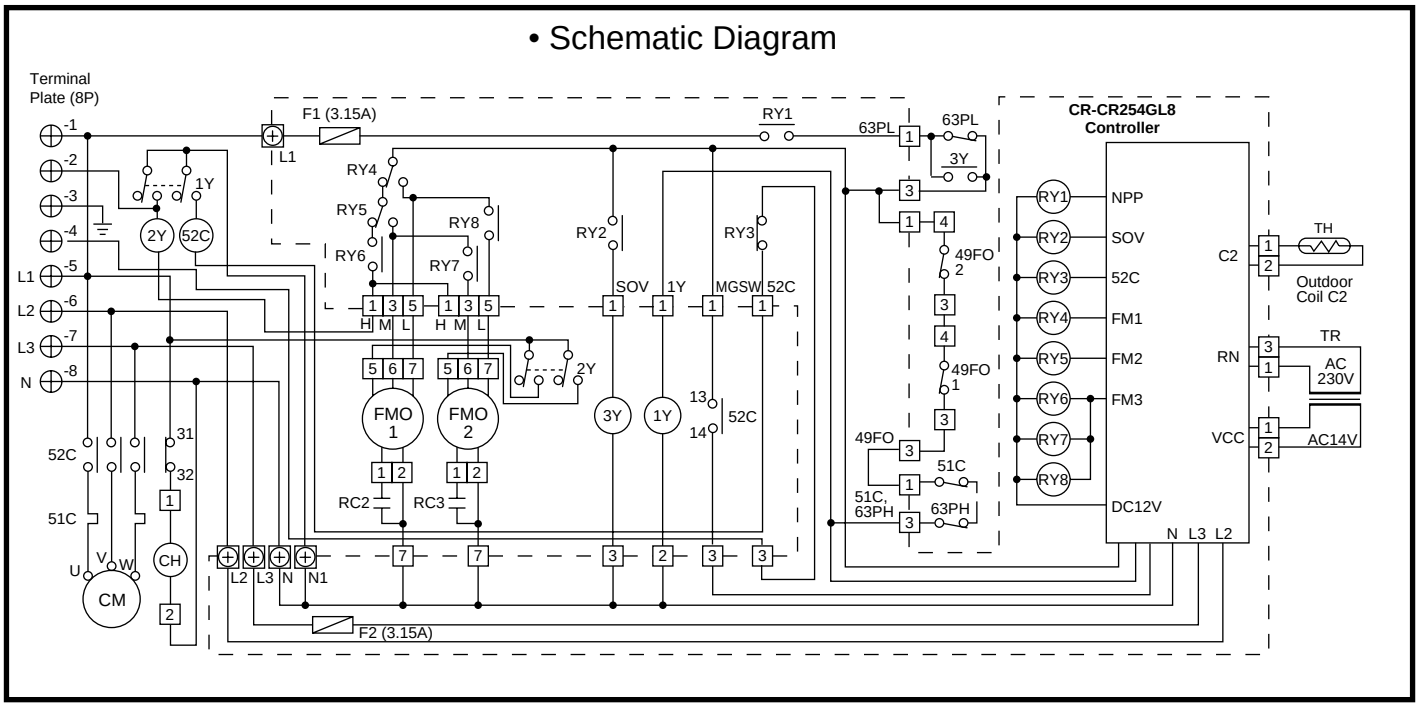

Ⓢ854-2-5269-046-00-1

Symbols	Description
CM	Compressor motor
CH	Crankcase Heater
FMO1, 2	Outdoor Fan Motor
52C	Compressor Motor Magnetic Contactor
49FO1, 2	Outdoor Fan Motor Thermal Protector
51C	Compressor Motor Overcurrent Relay
63PH	High Pressure Switch
63PL	Low Pressure Switch
TR	Power Transformer
TH	Thermistor (Outdoor Coil C2)
RC2, 3	Running Capacitor
RY1~8, 1Y~3Y	Auxiliary Relay
F1, 2	Fuse
⊕	Terminal Base
□	Connector
⊕	Terminal

4. SERVICE PROCEDURES

4-1 Troubleshooting ..... IV - 2
(1) Check before and after Troubleshooting ..... IV - 2
(2) Air conditioner does not operate ..... IV - 3
(3) Outdoor unit does not run ..... IV - 7
(4) Indoor unit does not run ..... IV - 9
(5) Some part does not operate ..... IV - 9
(6) Outdoor fan does not run ..... IV - 10
(7) Outdoor fan speed is not switched from High to Low even when the outdoor temperature falls below 25.5°C. ..... IV - 10
(8) Compressor does not run ..... IV - 10
(9) Poor cooling ..... IV - 11
(10) Excessive cooling ..... IV - 12
(11) PCB for "-EL" models ..... IV - 13
4-2 A Sensor is Defective ..... IV - 14
4-3 Operation of Major Electrical Parts ..... IV - 14
4-4 Checking the Electrical Components ..... IV - 15
(1) Measurement of Insulation Resistance ..... IV - 15
(2) Checking the Protective Devices ..... IV - 16
(3) Checking the Electrical Parts ..... IV - 17
(4) Thermistor Characteristic Curve ..... IV - 18

4-1 Troubleshooting

(1) Check before and after troubleshooting

Many problems may occur because of wiring or power supply problems, and so you should check these areas first. Problems here can cause incorrect results in some of the other tests, and so they should be remedied first.

①. Check power supply wiring

(a) Single-phase

❑ Check that the power supply wires are correctly connected to terminal No. 1 through No. 4 on the 4P terminal plate on the indoor unit and L and N on the 6P terminal on the outdoor unit.

(b) 3-phase

❑ Check that the power supply wires are correctly connected to terminal No.1 through No. 4 on the 4P terminal plate on the indoor unit and L1 through L3 and N on the 8P terminal on the outdoor unit.

②. Check the inter-unit wiring

❑ Check that the inter-unit control wires (AC 220 - 240 V Line voltage) are correctly connected between the indoor unit and outdoor unit.

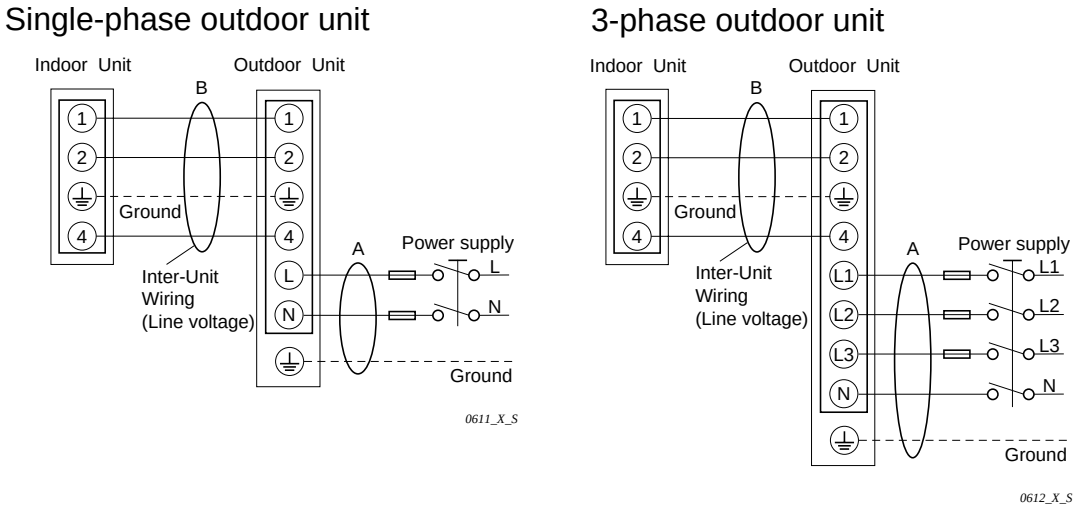

Fig. 4-1

③. Check the power supply

❑ Check that the voltage is within the specified range (±10% of the rating).

❑ Check that power is supplied.

If the following troubleshooting must be done with the power being supplied, take care not to touch any uninsulated live parts that will given an ELECTRIC SHOCK.

④. Check the lead wires and connectors in indoor and outdoor units.

❑ Check that the sheaths of the lead wires are not damaged.

❑ Check that the lead wires are firmly connected to the terminal plate.

❑ Check that the wiring has been performed correctly.

⑤. Reference

- Condition of general cooling operation (Thermo. ON)

  SWEEP.....ON

  Indoor fan speed....HIGH

(2) Air conditioner does not operate

① Circuit breaker trips (or fuse blows).

(a) When the circuit breaker is set to ON, it is soon tripped.

- There may be a ground fault.
- Check the insulation resistance.

  If the resistance value is 1MΩ or less, the insulation is defective.

(Example)

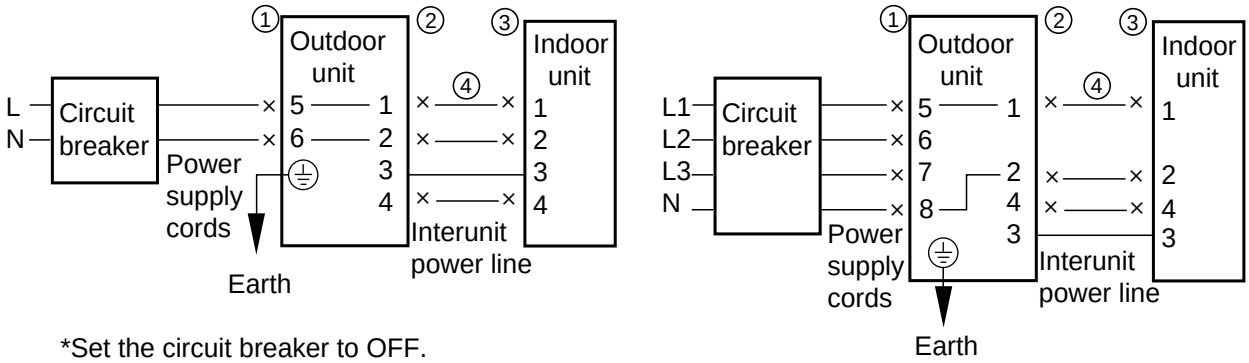

*Set the circuit breaker to OFF.

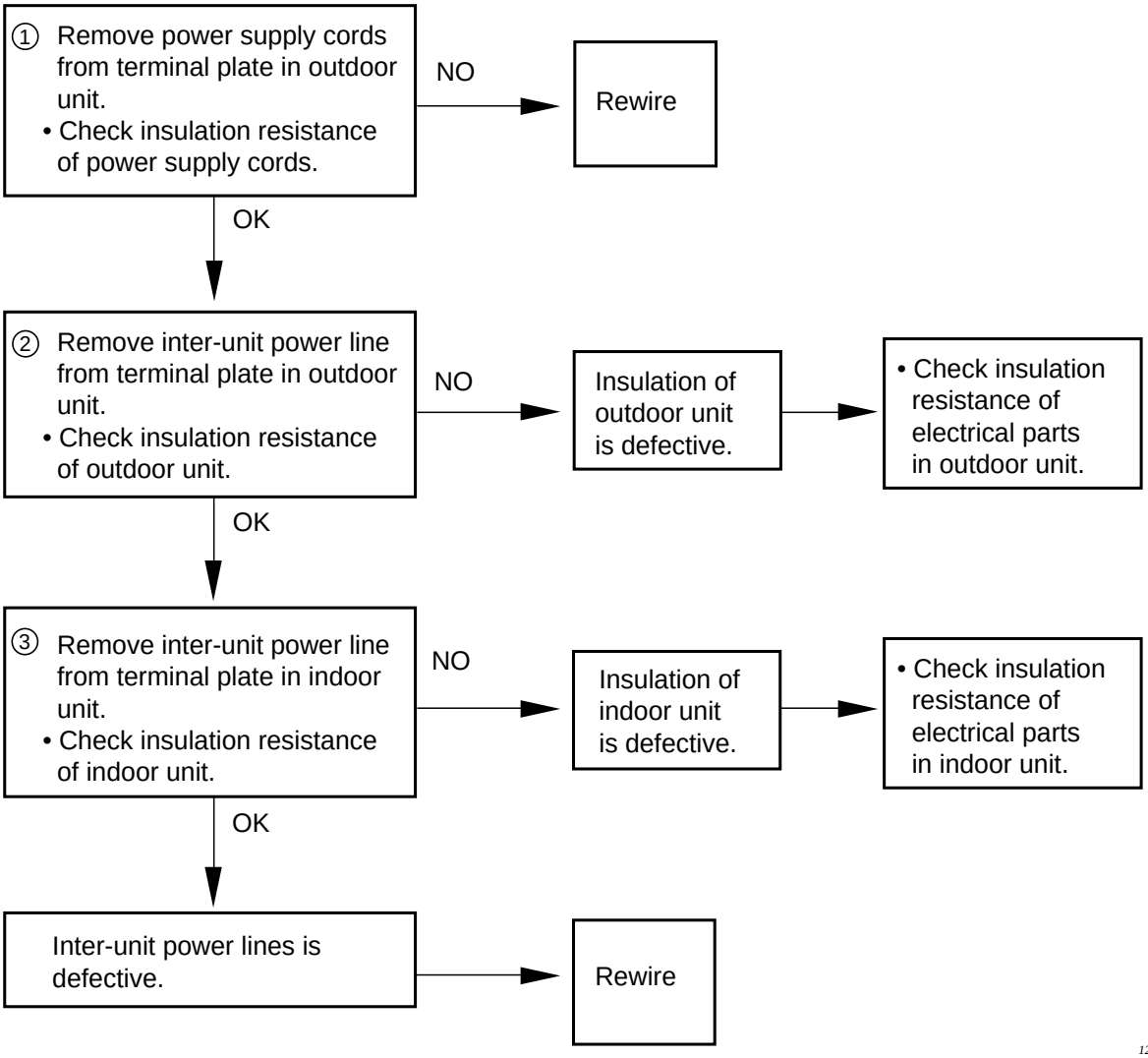

1281_X_S

4-2 Defective Sensor.

① **Indoor (heat exchanger) coil temp. Sensor is defective.**

(a) Open (=No continuity in sensor)

Compressor and outdoor fan repeatedly go ON for 10 minutes and OFF for 6 minutes when sensor opens.

(b) Short

“Freeze Prevention” does not operate when dehumidified water is frozen on the indoor coil.

② **Room temp. Sensor (in the remote control unit) is defective.**

(a) Open (=No continuity in sensor)

Neither the outdoor fan nor compressor runs.

(b) Short

The outdoor fan and compressor do not stop. — Excessive cooling.

4-3 Operation of Major Electrical Parts

Operation Mode (Function)		Operation	Indoor unit and Remote Control unit						Oudoor unit	
			Indicator lamps					Fan	Fan	Compressor
			Room Temp.	Cool	Timer	Night setback Energy saver	Sweep			
Cool -ing	Manual	Thermo. ON	○	○				○	○	○
		Thermo. OFF	○	○				○		
	Night setback	Thermo. ON	○	○		○		○	○	○
		Thermo. OFF	○	○		○				
	Timer (set)	ON Timer								
		OFF Timer	○	○	○			○	○	○
	Freeze prevention		○	○	○			○		
Fan			○					○		
Flap	Sweep	Cool	○	○*		○*		○	○*	○*
		Fan	○					○		
	Stop	Cool	○	○*		○*		○	○*	○*
		Fan	○					○		

NOTE ○* Refer to Cooling Mode.

C. Check “Operation selector” switch in the indoor unit.

: In case of wireless remote control unit (GS type)

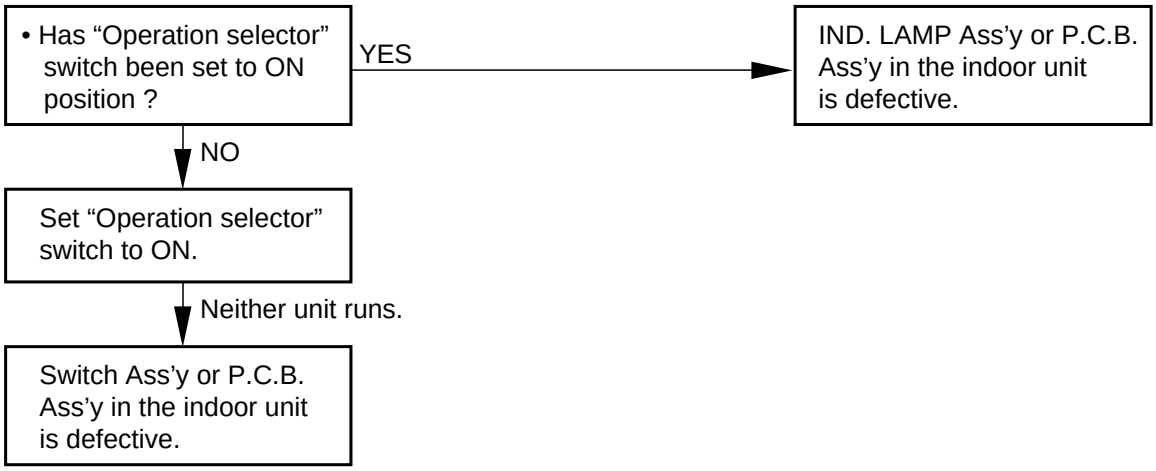

D. Check compressor motor protectors.

a) High pressure switch (63PH)

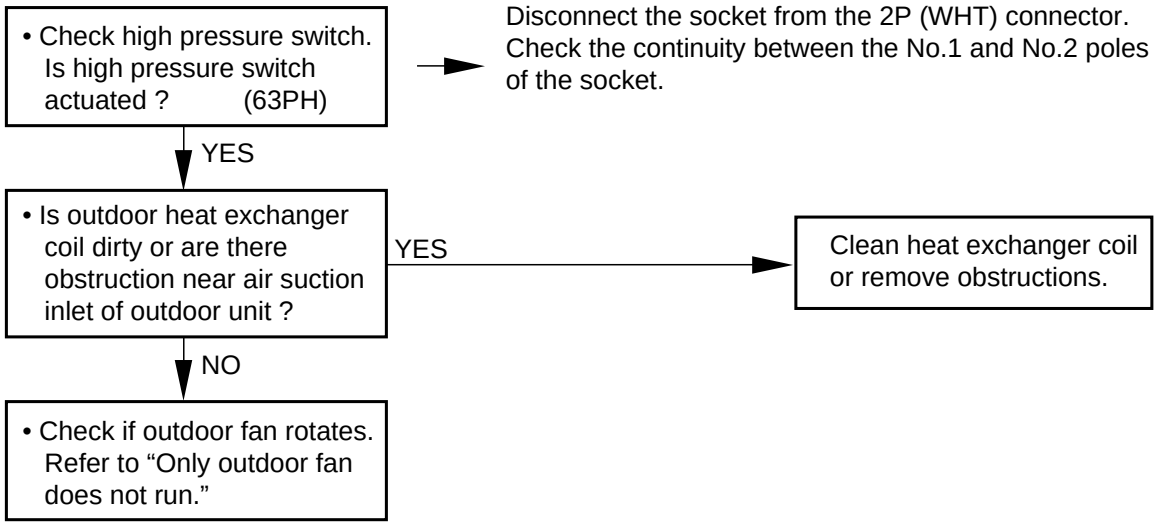

b) Compressor motor overcurrent relay (51C)

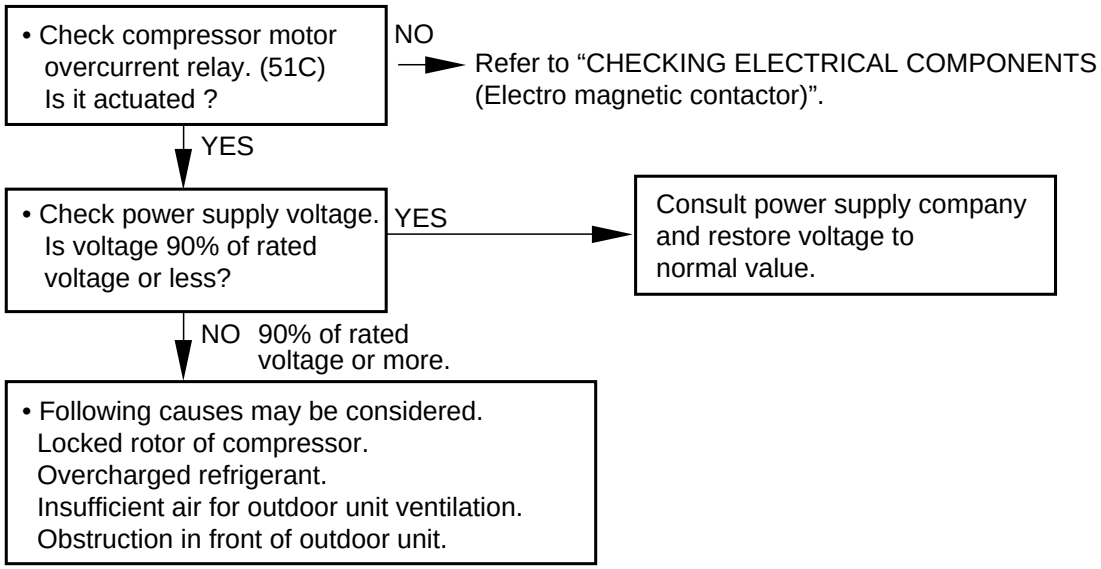

E. Check the auxiliary relay. (1Y or 2Y)

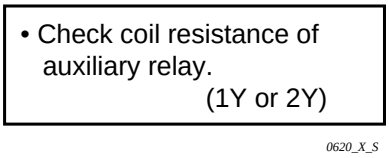

F. Check the indoor fan motor thermal protector (49FMI)

- Disconnect the socket from the 9P (WHT) connector.

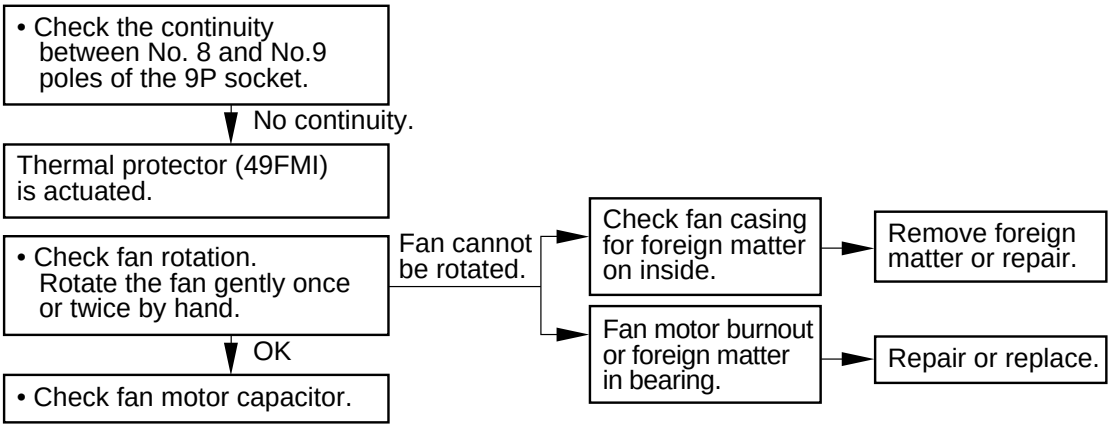

G. Check the fuse on the P.C.B. Ass'y in the indoor unit.

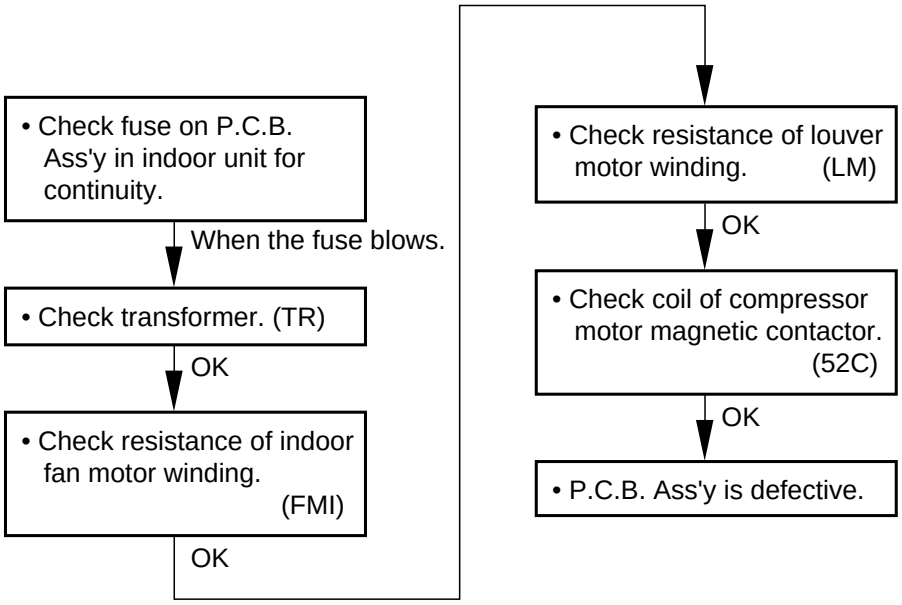

(3) Outdoor unit does not run.

A. Check the COOL/FAN selector switch in the remote control unit.

B. Check the set temperature.

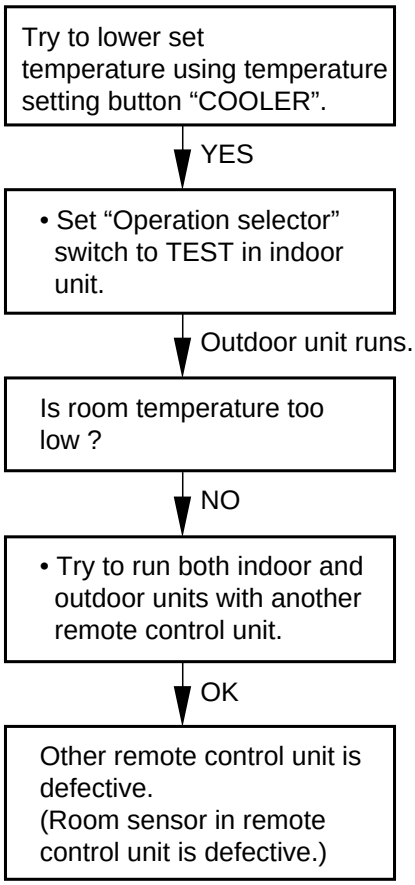

C. Outdoor unit is abnormal.

a) Check the power supply wiring

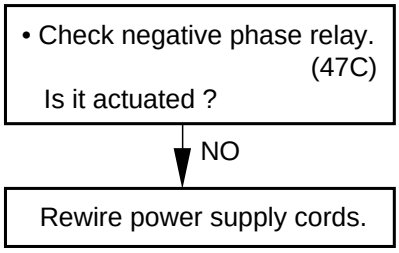

b) Check the compressor motor thermal protector (49C)

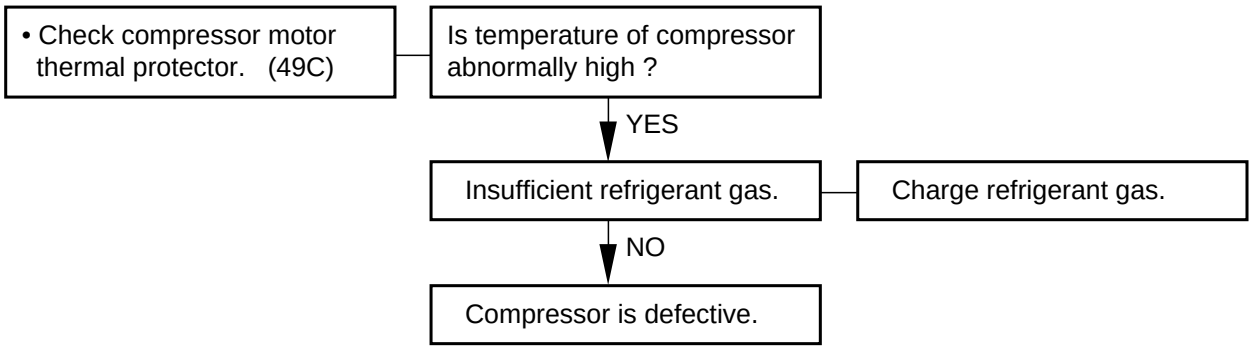

• Check compressor motor magnetic contactor. (52C)

(Only the outdoor fan does not run.)

D. Check the indoor unit P.C.B.

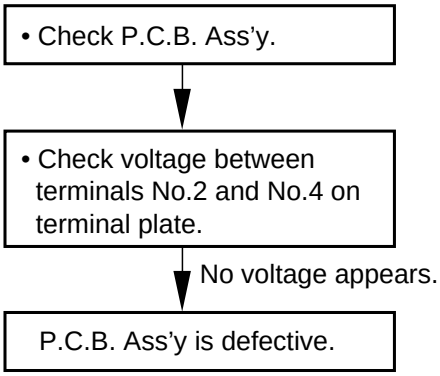

(4) Indoor unit does not run.

The indoor fan and louver motor do not run.

P.C.B. Ass'y is defective.

(5) Some parts fail to operate.

(1) The indoor fan does not run.

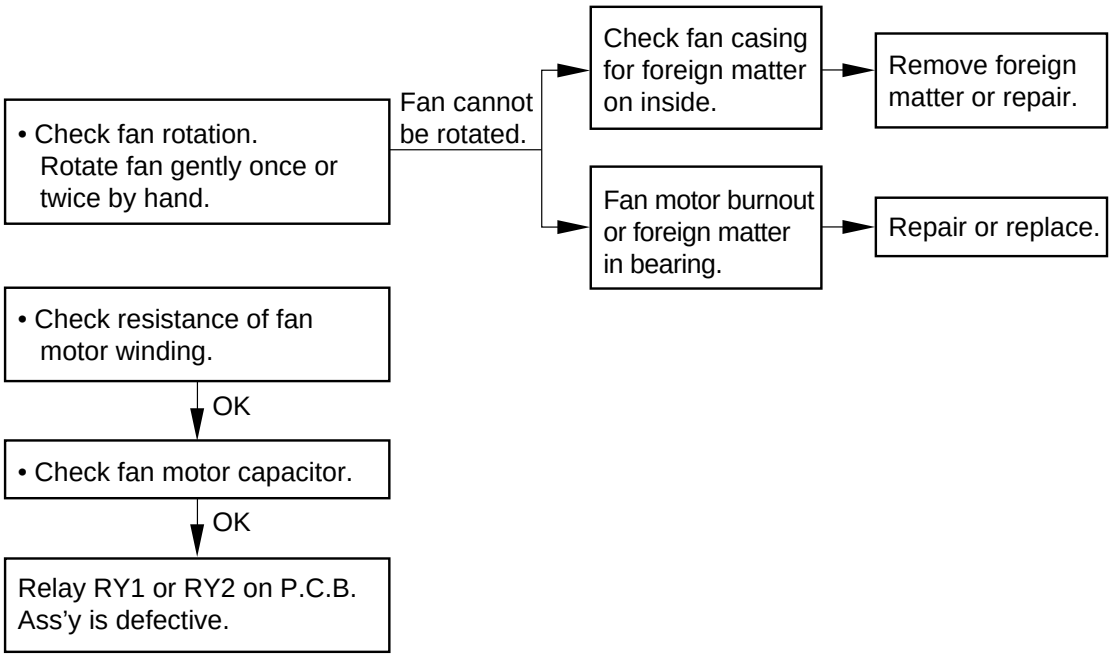

(2) Louver motor does not run.

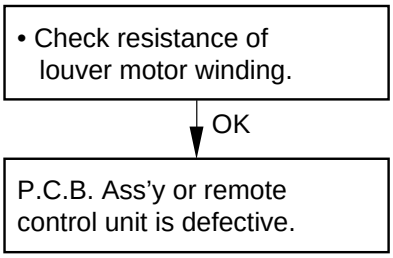

(6) Outdoor fan does not run.

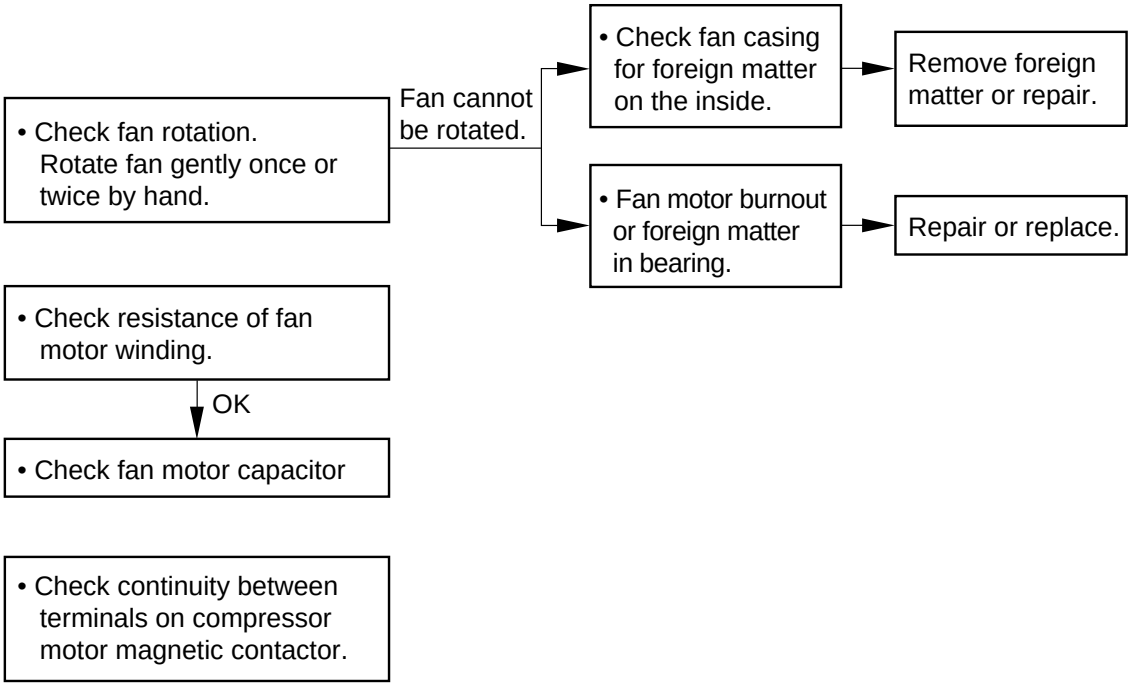

(7) Outdoor fan speed is not switched from High to Low even when the outdoor temperature falls below 25.5°C.

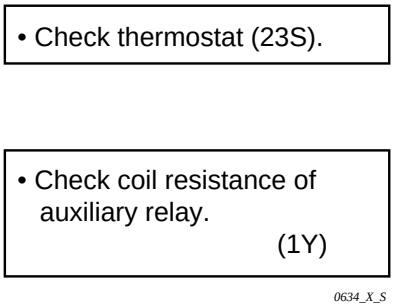

(8) Compressor does not run.

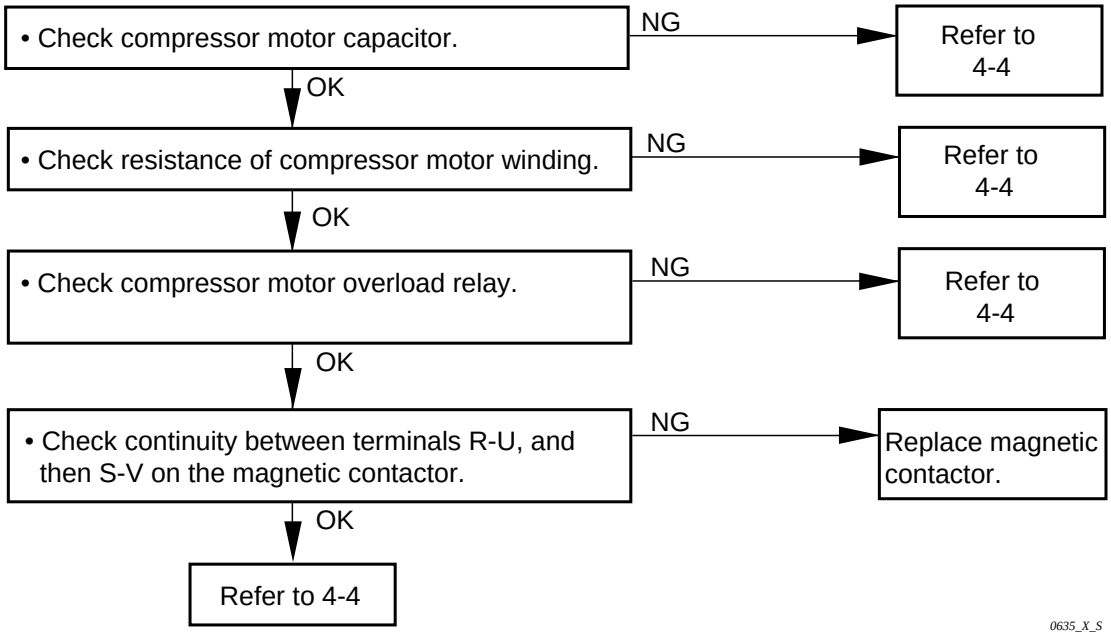

(9) Poor cooling

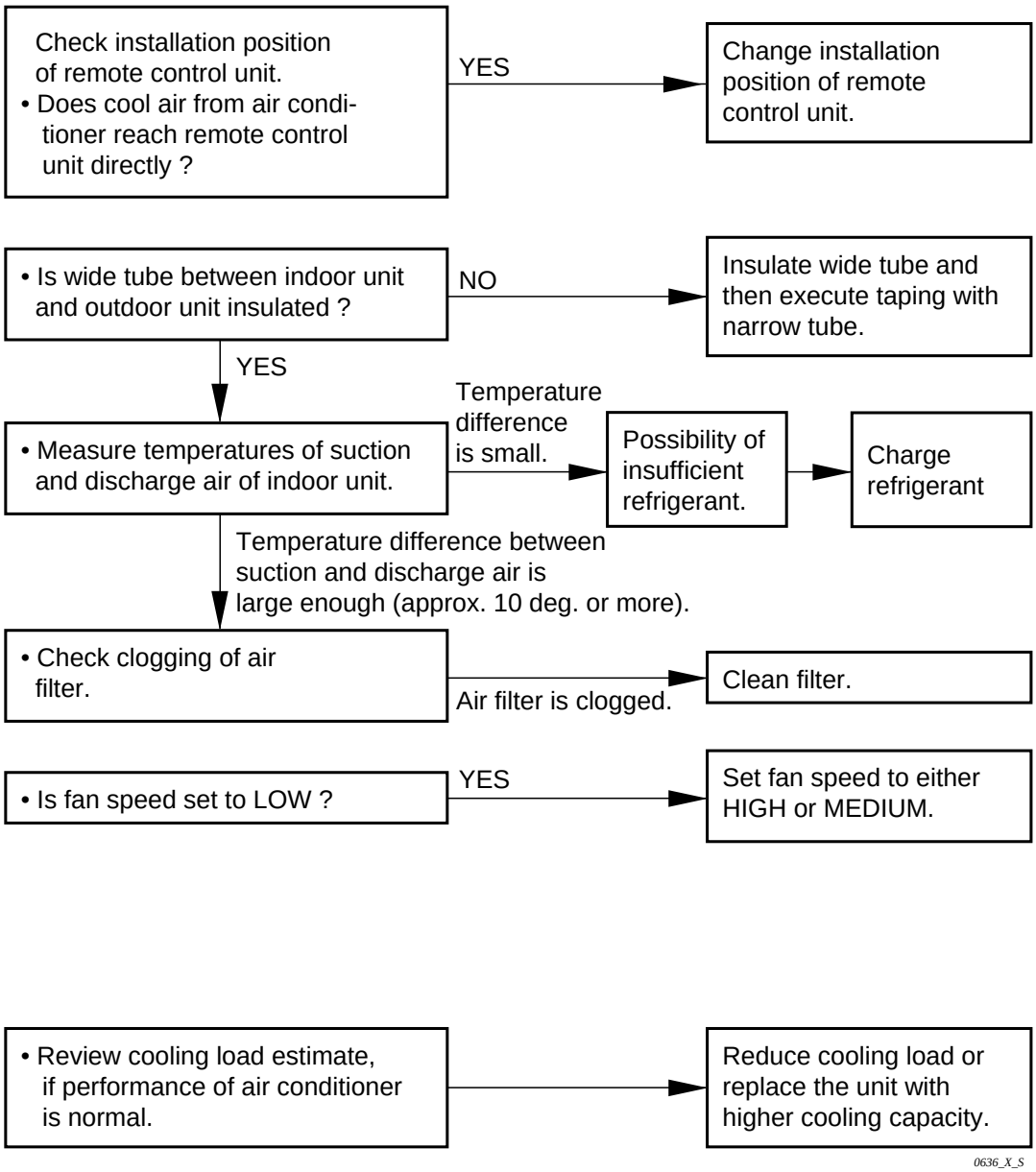

(10) Excessive cooling.

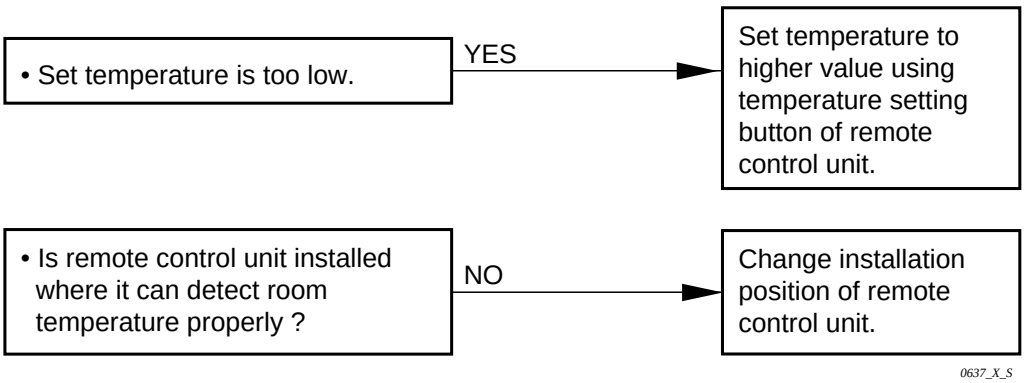

(11) PCB for LOW AMBIENT models

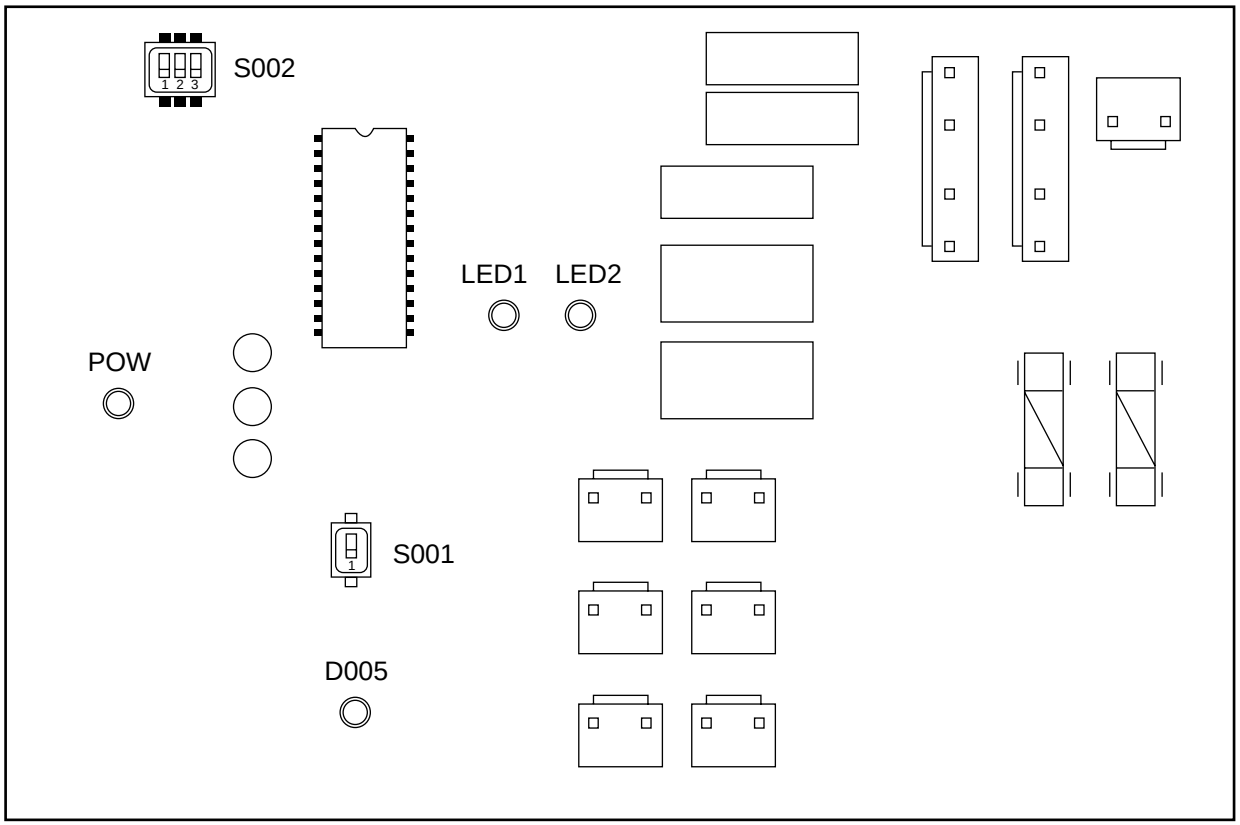

S002 (Capacity Code)

	1	2	3
25 type	OFF	OFF	OFF
36 type	ON	OFF	OFF
48 type	ON	ON	OFF

Meaning of LED indication

POW	LED1	LED2	D005	Cause of trouble
Light	Off	Off	Light	Normal state
Light	Flash	Light	Light	High pressure switch is activated, Outdoor fan thermal protector activated, Outdoor coil thermistor is open or short
Light	Off	Light	Light	Low pressure switch is activated
Light	Off	Light	Off	Negative phase, Defective phase

4-2 Defective Sensor.

① **Indoor (heat exchanger) coil temp. Sensor is defective.**

(a) Open (=No continuity in sensor)

Compressor and outdoor fan repeatedly go ON for 10 minutes and OFF for 6 minutes when sensor opens.

(b) Short

“Freeze Prevention” does not operate when dehumidified water is frozen on the indoor coil.

② **Room temp. Sensor (in the remote control unit) is defective.**

(a) Open (=No continuity in sensor)

Neither the outdoor fan nor compressor runs.

(b) Short

The outdoor fan and compressor do not stop. — Excessive cooling.

4-3 Operation of Major Electrical Parts

Operation Mode (Function)		Operation	Indoor unit and Remote Control unit						Oudoor unit	
			Indicator lamps					Fan	Fan	Compressor
			Room Temp.	Cool	Timer	Night setback Energy saver	Sweep			
Cool -ing	Manual	Thermo. ON	○	○				○	○	○
		Thermo. OFF	○	○				○		
	Night setback	Thermo. ON	○	○		○		○	○	○
		Thermo. OFF	○	○		○				
	Timer (set)	ON Timer								
		OFF Timer	○	○	○			○	○	○
	Freeze prevention		○	○	○			○		
Fan			○					○		
Flap	Sweep	Cool	○	○*		○*		○	○*	○*
		Fan	○					○		
	Stop	Cool	○	○*		○*		○	○*	○*
		Fan	○					○		

NOTE ○* Refer to Cooling Mode.

4-4 Checking the Electrical Components

(1) Measuring the Insulation Resistance

- The electrical insulation is acceptable when the resistance exceeds 1 MΩ.

① Power Supply Wires

Clamp the earthed wire of the Power Supply wires with the lead clip of the insulation resistance tester, and measure the resistance by placing the probe on either of the power wires. (**Fig. 4-2**)

Then measure the resistance between the earthed wire and the other power wires. (**Fig. 4-2**)

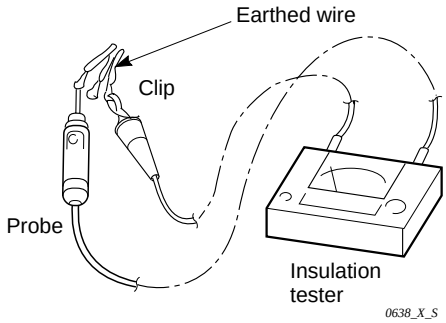

Fig. 4-2

② Indoor Unit

Clamp an aluminum plate fin or copper tube with the lead clip of the insulation resistance tester, and measure the resistance by placing the probe on the terminal plate. (**Fig. 4-3**)

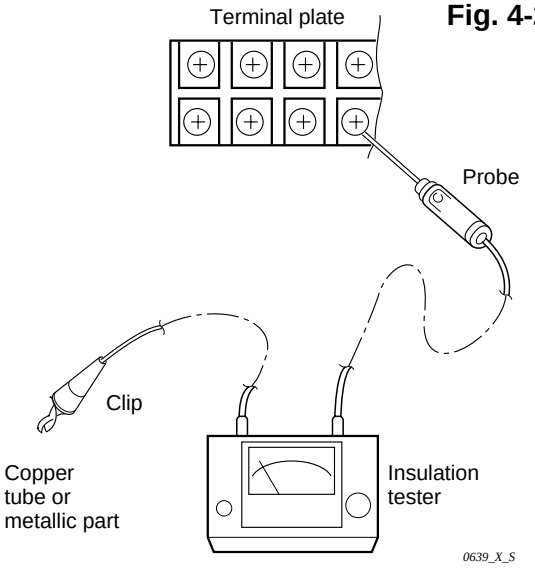

Fig. 4-3

③ Outdoor Unit

Measure the resistance by placing a probe on the terminal plate in the same manner as explained above in ②. (**Fig. 4-3**)

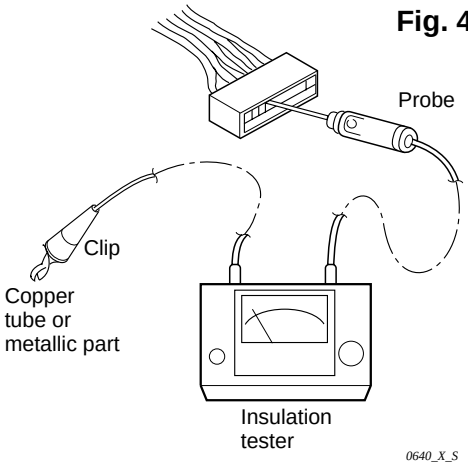

Fig. 4-4

④ Measuring the Insulation Resistance for Electrical Parts

- Disconnect the connector of the desired electrical part from terminal plate, P.C.B. Ass'y, etc. (**Fig. 4-4**)
- Similarly, disconnect the lead wires from the compressor, capacitor, etc. (**Fig. 4-5**)
- Measure the resistance in the same way as illustrated on the right.

  Refer to the Electrical Wiring Diagram.

NOTE
If the probe does not fit into the hole because the hole is too small, use a probe with a smaller pin.

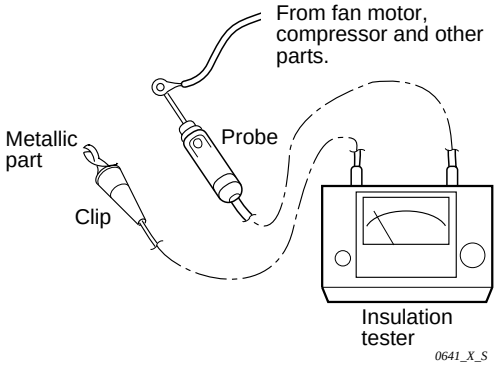

Fig. 4-5

(2) Checking the Protective Devices

- Disconnect the connector, consisting of P (plug) and S (socket) to check the protective device.
- Then check the continuity of the plug's (and/or socket's) terminal as in **Fig. 4-6**
- Normality of the protective device can be judged by the following table.
  The Protective Device is proved normal if there is a continuity between terminals.

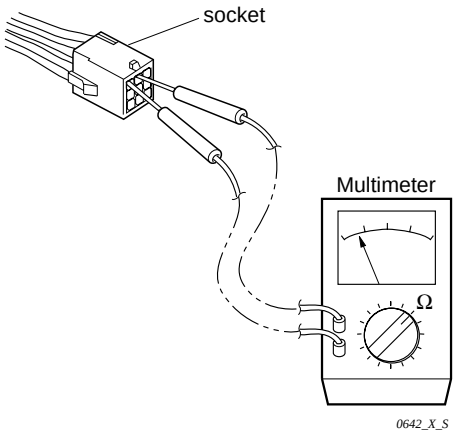

Fig. 4-6

① Indoor fan motor thermal protector (49FI) . . . . . Indoor unit

- Disconnect the connector which leads to the indoor fan motor (FMI).
- Check the socket terminals.

② Compressor motor thermal protector (49C) . . . . . Outdoor unit

- Disconnect both the connectors in the outdoor unit.
- Check the terminal between the plug and socket.

③ Outdoor fan motor thermal protector (49FO) . . . . . Outdoor unit

- Disconnect both the connector which leads to the outdoor fan motor (FMO).
- Check the socket terminal.

(3) Checking the Electrical Parts

① **Power transformer (TR1) ..... Indoor unit** *Measure the coil resistance.

- Primary 220-240 V ; Measure the resistance between the two WHT lead wire terminals of the socket connected to the power transformer.
- Secondary 10.6V ; Measure the resistance between the two BRN lead wires.

Refer to “1–3–(A) Other component specifications”.

② **Indoor fan motor (FMI) ..... Indoor unit** *Measure the coil resistance.

- Measure the resistance between each terminal of the socket connected to the indoor fan motor.

Refer to “1–2–(A) Major component specifications”.

③ **Outdoor fan motor (FMO) ..... Outdoor unit** *Measure the coil resistance.

- Measure the resistance in the same manner as explained above ②.

Refer to “1–2–(B) Major component specifications”.

④ **Fan motor capacitor ..... Both in indoor and outdoor unit**

- Disconnect the lead wires from the capacitor terminals, and then place the probe on the capacitor terminals as shown in **Fig. 4-7** Observe the deflection of the pointer, and set the resistance measuring range of the multimeter to the maximum value.
- The capacitor is “acceptable” if the pointer defects significantly and then gradually returns to its original position.

NOTE
The range of deflection and deflection time differ according to the capacitance of the capacitor.

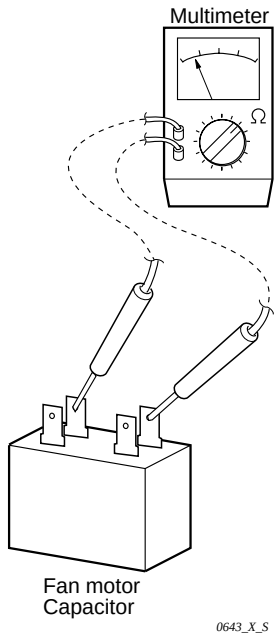

Fig. 4-7

⑤ **Fuse on indoor P.C.B. Ass'y**

- Remove the P.C.B. Ass'y from the electrical component box. Then pull out the fuse from the P.C.B. Ass'y. **(Fig. 4-8)**

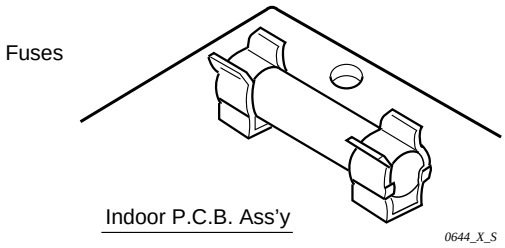

Fig. 4-8

- The check for continuity of the fuse by using the multimeter. **(Fig. 4-9)** Having continuity is acceptable.

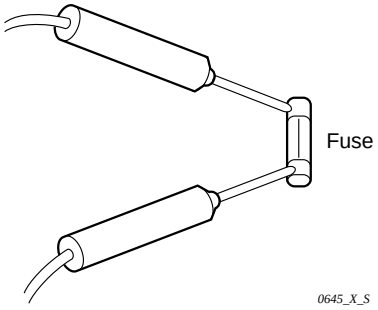

Fig. 4-9

(4) Thermistor Characteristic Curve

① Room temp. sensor

(KTEC-35)

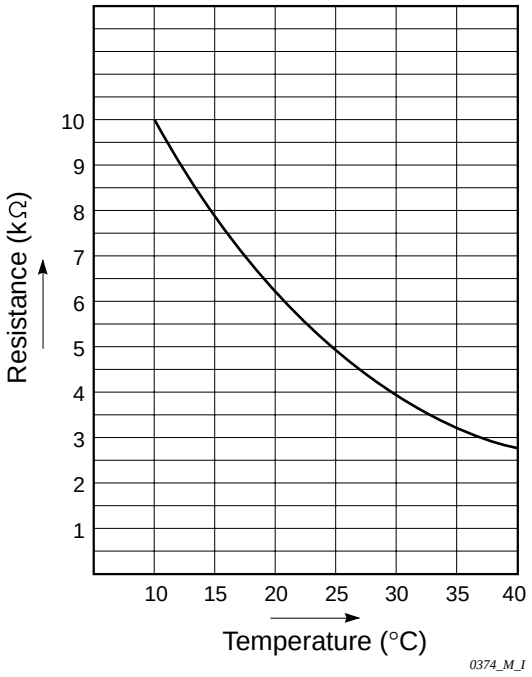

① Coil sensor
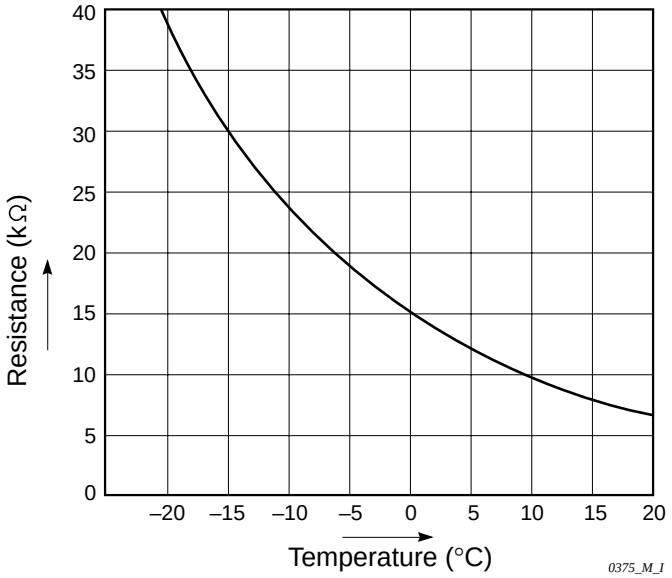
(PBC-41E)