HITACHI
Inspire the Next

INDOOR UNITS SYSTEM FREE SERIES
& Complementary Systems
FSN(2/3)(M)(E)

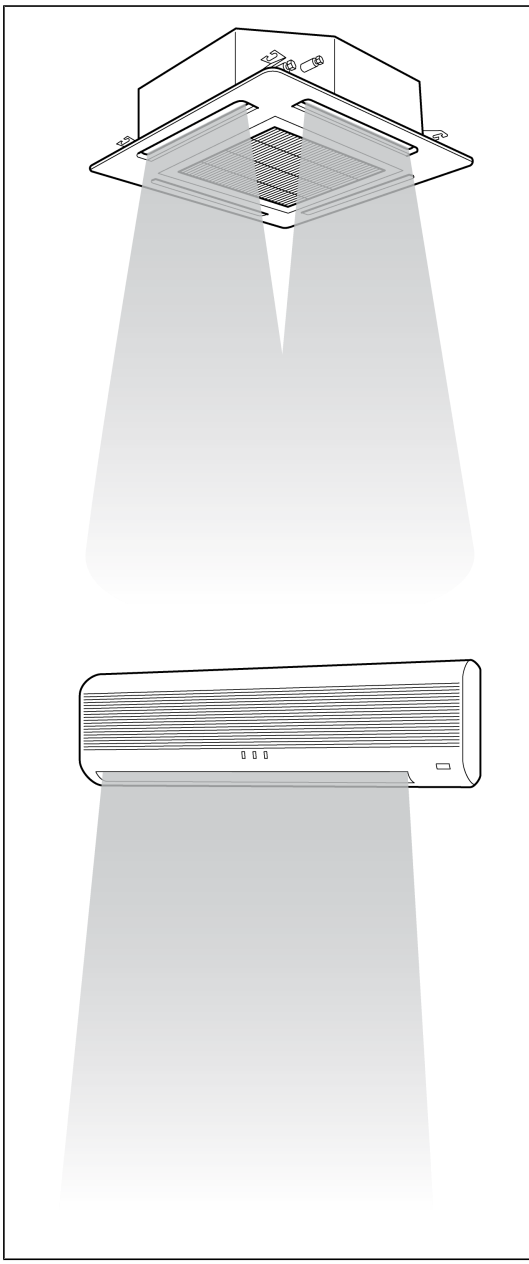

Service Manual

RCI	RPK
RCIM	RPF
RCD	RPFI
RPC	KPI
RPI	Econofresh
RPIM	DX-Interface

HITACHI
Inspire the Next

Index

General information 1

Unit installation 2

Piping work and refrigerant charge 3

Electrical wiring 4

Control system 5

Optional functions 6

Test run 7

Troubleshooting 8

Spare parts 9

Servicing 10

Electrical checks of the main parts 11

Maintenance notes 12

Index

1 General information ... 1

1.1 General information ... 2

1.1.1 General information ... 2
1.1.2 Introduction ... 2
1.1.3 Environment-friendly units ... 2

1.2 Applied symbols ... 3

1.3 Product guide ... 4

1.3.1 Classification of indoor unit models ... 4
1.3.2 KPI energy / heat recovery unit classification ... 4
1.3.3 DX-Interface ... 4
1.3.4 Product guide: indoor units ... 5
1.3.5 Product guide: complementary systems ... 8
1.3.6 Accessory code list ... 9

2 Unit installation ... 13

2.1 RCI - 4-way cassette ... 15

2.1.1 Accessories supplied with the unit ... 15
2.1.2 Unit installation ... 15
2.1.3 Accessories supplied with the air panel ... 19
2.1.4 Air panel installation ... 19

2.2 RCIM - 4-way cassette (compact) ... 24

2.2.1 Accessories supplied with the unit ... 24
2.2.2 Unit installation ... 24
2.2.3 Accessories supplied with the air panel ... 28
2.2.4 Air panel installation ... 28

2.3 RCD - 2-way cassette ... 30

2.3.1 Accessories supplied with the unit ... 30
2.3.2 Unit installation ... 30
2.3.3 Accessories supplied with the air panel ... 34
2.3.4 Air panel installation ... 34

2.4 RPC - Ceiling ... 38

2.4.1 Accessories supplied with the unit ... 38
2.4.2 Unit installation ... 38
2.4.3 Suspension bracket installation ... 38
2.4.4 Indoor unit installation ... 39

2.5 RPI(M) - Ducted indoor unit (0.8-6.0)FSN(2/3)E(-DU) ... 42

2.5.1 Accessories supplied with the unit ... 42
2.5.2 Unit installation ... 42
2.5.3 Air duct connection ... 45
2.5.4 Maintenance of the suction air filter ... 46
2.5.5 Change in the air suction direction ... 46

2.6 RPI - Ducted indoor unit (8-10)FSN3E ... 48

2.6.1 Accessories supplied with the unit ... 48
2.6.2 Unit installation ... 48
2.6.3 Air duct connection ... 50
2.6.4 Maintenance of the suction air filter ... 50

2.7 RPK - FSN2M Wall mounted 51
2.7.1 Accessories supplied with the unit 51
2.7.2 Unit installation 51
2.7.3 Mounting bracket dimensions 56
2.8 RPF - Floor type, RPFI - Floor concealed type 58
2.8.1 Accessories supplied with the unit 58
2.8.2 Unit installation 58
2.8.3 Change in the air outlet direction (RPFI units) 61
2.8.4 RPF: Optional PC-ART remote control location 61
2.9 KPI energy / heat recovery unit 62
2.9.1 Accessories supplied with the unit 62
2.9.2 Unit installation 62
2.9.3 Duct connection 64
2.10 Econofresh Kit 67
2.10.1 Accessories supplied with the unit 67
2.10.2 Unit installation 67
2.10.3 Maintenance 68
2.11 DX-Interface 69
2.11.1 Accesories supplied with the unit 69
2.11.2 Mounting method 69
2.11.3 Thermistor installation 70
2.12 Optional accessories 73
2.12.1 Outdoor air inlet 73
2.12.2 Filters 78
3 Piping work and refrigerant charge 81
3.1 Refrigerant pipe selection 82
3.1.1 Refrigerant pipe selection 82
3.2 Copper pipes, sizes, connection and insulation 83
3.2.1 Copper pipes and sizes 83
3.2.2 Pipe connection 84
3.2.3 Insulation of multikits and/or branches 84
3.3 General instructions on the installation of refrigerant pipes 85
3.4 Copper refrigerant pipe 86
3.4.1 Three principles on work with refrigerant pipes 86
3.4.2 General information on copper refrigeration pipes 86
3.4.3 Diameters of the copper refrigeration pipes 87
3.4.4 Preparing and cutting copper refrigeration pipes 87
3.4.5 Bending copper pipes 89
3.4.6 Brazing copper refrigeration pipes 89
3.4.7 Flared connection mounting 91
3.4.8 Refrigerant pipe insulation 91
3.4.9 Refrigerant pipe suspension 92
3.5 Refrigerant and drain hose installation 93
3.5.1 RCI - 4-way cassette (1.0-6.0)FSN3E 93
3.5.2 RCIM-4-way cassette (compact) (1.0-2.0)FSN2 94
3.5.3 RCD - 2-way cassette (1.0-5.0)FSN2 96
3.5.4 RPC - Ceiling type (2.0-6.0)FSN2E 97
3.5.5 RPI - Ducted indoor unit (0.8-1.5)FSN2E 101

3.5.6 RPI - Ducted indoor unit (2.0-10.0)FSN3E ... 102
3.5.7 RPIM - Ducted indoor unit (0.8-1.5)FSN2E(-DU) ... 105
3.5.8 RPK - Wall type (1.0-4.0)FSN(H)2M ... 107
3.5.9 RPF(I)-Floor type (1.0-2.5)FSN2E ... 110
3.6 Refrigerant charge ... 112
3.7 Precautions in the event of refrigerant leaks ... 113
3.7.1 Maximum permissible concentration of hydrofluorocarbon (HFC) ... 113
3.7.2 Calculation of the concentration of refrigerant ... 113
3.7.3 Countermeasures in the event of refrigerant leaks ... 113
4 Electrical wiring ... 115
4.1 Unit electrical wiring and connection ... 116
4.1.1 Wiring and main switch selection ... 116
4.1.2 Electrical connection of RCI units ... 117
4.1.3 Electrical connection of RCIM units ... 119
4.1.4 Electrical connection of RCD units ... 122
4.1.5 Electrical connection of RPC units ... 124
4.1.6 Electrical connection of RPI units ... 125
4.1.7 Electrical connection of RPIM units ... 129
4.1.8 Electrical connection of RPK units ... 131
4.1.9 Electrical connection of RPF(I) units ... 134
4.1.10 Electrical connection of KPI units ... 136
4.1.11 DX-Interface electrical wiring ... 137
4.1.12 Network system connection (CS-NET WEB) ... 139
4.1.13 Connection between units H-LINK and H-LINK II ... 140
4.2 Setting of DIP switches and RSW switches ... 141
4.2.1 Location of DIP switches and RSW switches ... 142
4.2.2 Functions of the DIP switches and RSW switches ... 143
4.3 Wiring diagrams for indoor units and complementary systems ... 150
4.3.1 Wiring diagrams for indoor units ... 150
4.3.2 Wiring diagrams for complementary systems ... 163
5 Control system ... 169
5.1 Device control system ... 170
5.1.1 Printed circuit boards for RCI(M) indoor units ... 171
5.1.2 Printed circuit boards for RCD indoor units ... 173
5.1.3 Printed circuit board for RPC, RPF(I), RPI(M) units ... 174
5.1.4 Printed circuit board for RPI-(8.0/10.0)FSN3E units ... 176
5.1.5 Printed circuit board for RPK-FSN(H)2M units ... 177
5.1.6 Printed circuit board for KPI complementary systems ... 179
5.1.7 Printed circuit board for DX-Interface complementary systems ... 181
5.2 Safety protection and control ... 183
5.3 Standard control functions ... 184
5.3.1 Freeze protection during the cooling or dehumidification process ... 184
5.3.2 Indoor electronic expansion valve control ... 185
5.3.3 Activation of the control with protection device ... 186
5.3.4 Automatic cooling/heating operation control ... 187
5.3.5 Preventive high-pressure increase control ... 187

6 Optional functions ... 189

6.1 Indoor units ... 190

6.1.1 Available ports ... 190
6.1.2 Optional signal configuration ... 191
6.1.3 Programming with PC-ART ... 195
6.1.4 Description of optional input signals ... 196
6.1.5 Description of optional output signals ... 199

6.2 Complementary systems ... 201

6.2.1 KPI ... 201
6.2.2 Econofresh Kit ... 203
6.2.3 DX-Interface ... 205

6.3 Remote controls ... 206

6.3.1 Optional remote control functions ... 206
6.3.2 List of optional remote control functions ... 208
6.3.3 Description of the optional remote control functions ... 214
6.3.4 Optional functions for PC-ARH remote controls ... 227
6.3.5 Optional functions on wireless remote controls ... 229

7 Test run ... 231

7.1 Checks prior to the test run ... 232

7.1.1 Check points ... 232
7.1.2 Check procedure ... 232

7.2 Test procedure using the remote control ... 234
7.3 Test procedure using the wireless remote control ... 236
7.4 Test run check list ... 238

8 Troubleshooting ... 239

8.1 Self-check of the indoor unit PCB (for RPK only) ... 240
8.2 Electronic expansion valve check procedure ... 241
8.3 Procedure for checking fan motors in indoor units ... 242
8.4 Inspection of other components ... 246

9 Spare parts ... 247

9.1 RCI-(1.0-1.6)FSN3E ... 248
9.2 RCIM-(1.0-2.0)FSN2 ... 250
9.3 RCD-(1.0-3.0)FSN2 ... 252
9.4 RCD-(4.0/5.0)FSN2 ... 254
9.5 RPC-(2.0-6.0)FSN2E ... 256
9.6 RPI-(0.8-1.5)FSN2E ... 258
9.7 RPI-(2.0-3.0)FSN3E ... 260
9.8 RPI-(4.0-6.0)FSN3E ... 262
9.9 RPI-(8.0/10.0)FSN3E ... 264
9.10 RPIM-(0.8-1.5)FSN2E(-DU) ... 266
9.11 RPK-(1.0/1.5)FSN2M ... 268
9.12 RPK-(1.0/1.5)FSNH2M ... 270
9.13 RPK-2.0FSN2M ... 272
9.14 RPK-(2.5-4.0)FSN2M ... 274
9.15 RPF-(1.5-2.5)FSN2E ... 276

9.16 RPFI-(1.0-2.5)FSN2E ... 278
9.17 KPI-(252-2002)E2E ... 280
9.18 KPI-(502-2002)H2E ... 282
9.19 KPI-3002H2E ... 284
9.20 DX-Interface ... 286

10 Servicing ... 289

10.1 RCI - 4-way cassette (1.0-6.0)FSN3E ... 292
10.1.1 Removal of the long-lasting air filter ... 292
10.1.2 Removal of the air inlet grille ... 292
10.1.3 Removal of the electrical box cover ... 293
10.1.4 Removal of the optional air panel ... 293
10.1.5 Removal of the fan duct and motor ... 294
10.1.6 Bellmouth removal ... 295
10.1.7 Removal of the printed circuit board (PCB) ... 295
10.1.8 Removal of the drain pan ... 296
10.1.9 Removal of the drain mechanism ... 296
10.1.10 Removal of the float switch ... 297
10.1.11 Removal of the thermistors from the liquid and gas pipes ... 297
10.1.12 Removal of the electronic expansion valve coil ... 297
10.1.13 Removal of the automatic louver motor ... 299
10.2 RCIM - 4-way cassette (1.0-2.0)FSN2 (compact) ... 300
10.2.1 Removal of the air filter ... 300
10.2.2 Removal of the air inlet grille ... 300
10.2.3 Removal of the electrical box cover ... 300
10.2.4 Removal of the optional air panel ... 301
10.2.5 Removal of the electrical box ... 302
10.2.6 Removal of the fan duct and the fan ... 303
10.2.7 Removal of the printed circuit board (PCB) ... 303
10.2.8 Removal of the drain pan ... 304
10.2.9 Removal of the drain mechanism ... 304
10.2.10 Removal of the float switch ... 306
10.2.11 Removal of the thermistors from the liquid and gas pipes ... 306
10.2.12 Removal of the electronic expansion valve coil ... 307
10.2.13 Removal of the automatic louver motor ... 308
10.3 RCD - 2-way cassette ... 309
10.3.1 Removal of the long-lasting filter and the air inlet grille ... 309
10.3.2 Removal of the electrical box ... 309
10.3.3 Removal of the optional air panel ... 309
10.3.4 Removal of the fan duct and the fan ... 310
10.3.5 Removal of the printed circuit board (PCB) ... 311
10.3.6 Removal of the float switch ... 311
10.3.7 Removal of the drain mechanism ... 312
10.3.8 Removal of the drain pan ... 312
10.3.9 Removal of the thermistors from the liquid and gas pipes ... 313
10.3.10 Removal of the electronic expansion valve coil ... 313
10.3.11 Removal of the automatic louver motor ... 315
10.4 RPC - Ceiling ... 317
10.4.1 Removal of the air filter ... 317
10.4.2 Removal of the side panel ... 317
10.4.3 Removal of the air outlet grille ... 318

10.4.4 Removal of the fan motor ... 318
10.4.5 Removal of the fan shaft support ... 319
10.4.6 Removal of the coupling ... 320
10.4.7 Removal of the automatic louver motor ... 320
10.4.8 Removal of the thermistors from the liquid and gas pipes ... 320
10.4.9 Removal of the printed circuit board (PCB) ... 321
10.5 RPI-(0.8-6.0)FSN(2/3)E ... 323
10.5.1 Removal of the electrical box ... 323
10.5.2 Removal of the inlet and outlet air thermistors ... 324
10.5.3 Removal of the thermistors from the liquid and gas pipes ... 325
10.5.4 Removal of the fan parts ... 326
10.5.5 Removal of the drain mechanism ... 327
10.5.6 Removal of the float switch ... 328
10.5.7 Removal of the air filter ... 328
10.6 RPI-(8.0-10.0)FSN3E - Ducted indoor unit ... 329
10.6.1 Removal of the electrical box cover ... 329
10.6.2 Removal of electrical components ... 329
10.6.3 Removal of the inlet and outlet air thermistors ... 329
10.6.4 Removal of the thermistors from the liquid and gas pipes ... 331
10.6.5 Removal of the drain pan ... 331
10.6.6 Fan removal ... 332
10.6.7 Removal of the float switch ... 333
10.6.8 Removal of the air filter ... 333
10.7 RPIM - Ducted indoor unit ... 334
10.7.1 Removal of the electrical box ... 334
10.7.2 Removal of the inlet and outlet air thermistors ... 335
10.7.3 Removal of the thermistors from the liquid and gas pipes ... 336
10.7.4 Removal of the fan parts ... 337
10.7.5 Removal of the float switch ... 338
10.7.6 Removal of the air filter ... 339
10.8 RPK - FSN2M Wall mounted ... 340
10.8.1 Removal of the air filter ... 340
10.8.2 Removal of the front panel ... 341
10.8.3 Removal of the right cover (only RPK-(2.5-4.0)FSN2M) ... 344
10.8.4 Removal of the suction air grille (only RPK-(2.5-4.0)FSN2M) ... 344
10.8.5 Removal of the automatic louver motor ... 345
10.8.6 Remove the electrical box panel ... 346
10.8.7 Removal of the thermistors from the liquid and gas pipes and the inlet air and outlet air thermistors ... 347
10.8.8 Removal of the printed circuit board (PCB) ... 350
10.8.9 Removal of the heat exchanger ... 355
10.8.10 Removal of the AS motor ... 357
10.8.11 Removal of the drain pan ... 358
10.8.12 Removal of the fan motor ... 359
10.8.13 Removal of the electronic expansion valve ... 362
10.9 RPF(I)- (1.0-2.5) ... 364
10.9.1 Removal of the air inlet grille ... 364
10.9.2 Removal of the air filter ... 364
10.9.3 Removal of the air outlet grille ... 365
10.9.4 Removal of the front panel ... 365
10.9.5 Removal of the fan motor ... 365

10.9.6 Removal of the printed circuit board (PCB)..... 366
10.9.7 Removal of the thermistors from the liquid and gas piping..... 367
10.9.8 Removal of the fan motor..... 367
10.9.9 Removal of the printed circuit board (PCB)..... 367
10.9.10 Removal of the thermistors from the liquid and gas piping..... 367
10.10 KPI..... 368
10.10.1 System description..... 368
10.10.2 Structure and part names..... 368
10.10.3 Filter maintenance..... 368
10.10.4 Cleaning energy recovery ventilation unit elements..... 371
10.10.5 Energy recovery ventilation unit fan connectors and units..... 373
10.11 DX-Interface..... 375
10.11.1 Structure and part names..... 375
10.11.2 Removal of the electrical components..... 375
11 Electrical checks of the main parts..... 377
11.1 Thermistor..... 378
11.2 Electronic expansion valve..... 379
11.3 Automatic louver mechanism..... 380
11.3.1 RCI(M) indoor units..... 380
11.3.2 RCD indoor units..... 381
11.3.3 RPC indoor units..... 381
12 Maintenance notes..... 383
12.1 Regular equipment maintenance..... 384
12.1.1 Regular equipment maintenance..... 384
12.1.2 Indoor heat exchanger cleaning..... 401
12.1.3 Collection of refrigerant to replace the indoor unit..... 411

HITACHI
Inspire the Next

1. General information

Index

1.1 General information..... 2
1.1.1 General information..... 2
1.1.2 Introduction..... 2
1.1.3 Environment-friendly units..... 2
1.2 Applied symbols..... 3
1.3 Product guide..... 4
1.3.1 Classification of indoor unit models..... 4
1.3.2 KPI energy / heat recovery unit classification..... 4
1.3.3 DX-Interface..... 4
1.3.4 Product guide: indoor units..... 5
1.3.5 Product guide: complementary systems..... 8
1.3.6 Accessory code list..... 9

1.1 General information

1.1.1 General information

No part of this publication may be reproduced, copied, filed or transmitted in any shape or form without the permission of HITACHI Air Conditioning Products Europe, S.A.

Within the policy of continuous improvement of its products, HITACHI Air Conditioning Products Europe, S.A. reserves the right to make changes at any time without prior notification and without being compelled to introducing them into products subsequently sold. This document may therefore have been subject to amendments during the life of the product.

HITACHI makes every effort to offer correct, up-to-date documentation. Despite this, printing errors cannot be controlled by HITACHI and are not its responsibility.

As a result, some of the images or data used to illustrate this document may not refer to specific models. No claims will be accepted based on the data, illustrations and descriptions included in this manual.

No type of modification must be made to the equipment without prior, written authorisation from the manufacturer.

1.1.2 Introduction

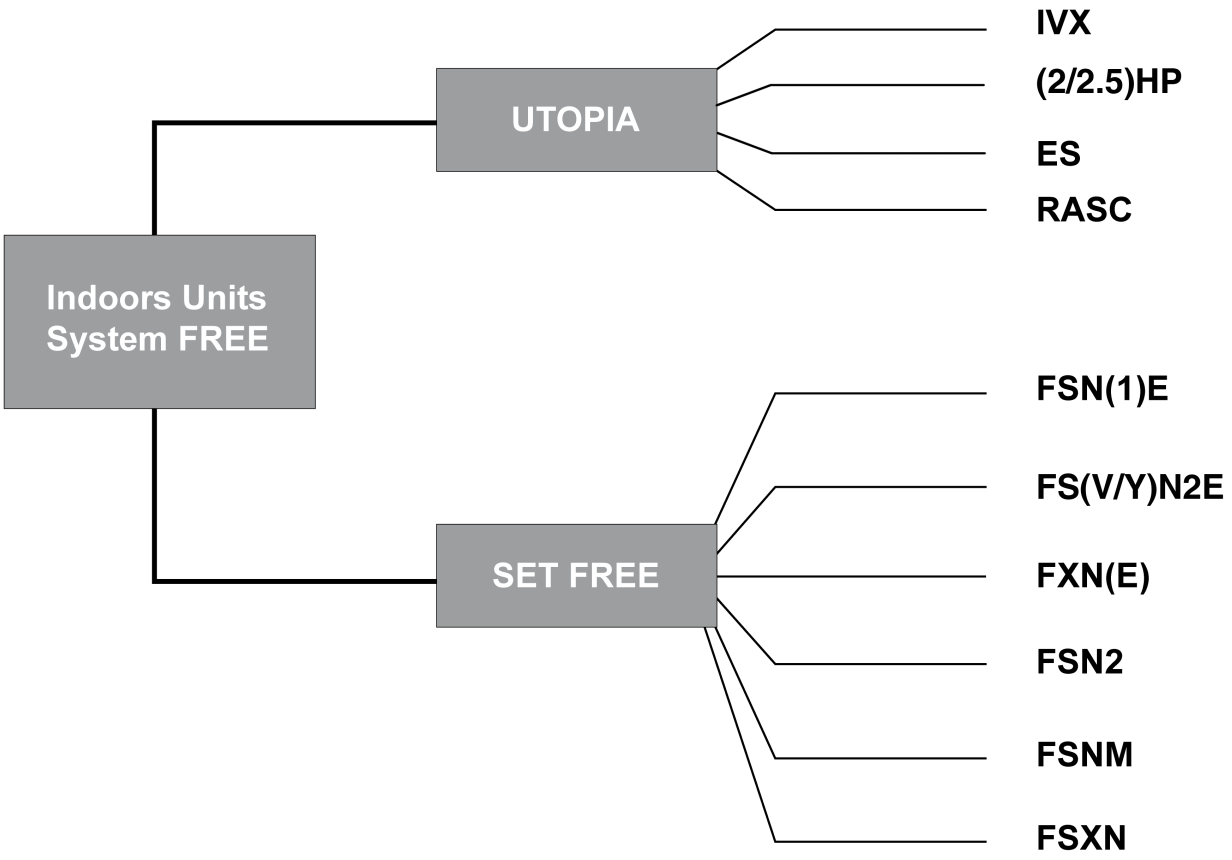

HITACHI offers the SYSTEM FREE series range of indoor units, the main advantage of which is that they can be combined with UTOPIA and SET FREE series outdoor units.

This eliminates the need to duplicate models of indoor units and reduces stock.

1.1.3 Environment-friendly units

The new range of HITACHI indoor units uses environment-friendly R410A refrigerant and applies RoHS and Green Dot standards throughout the production and installation process to reflect HITACHI's awareness of environmental respect and commitment.

1.2 Applied symbols

During normal air conditioning system design work or unit installation, greater attention must be paid in certain situations requiring particular care in order to avoid damage to the unit, the installation or the building or property.

Situations that jeopardise the safety of those in the surrounding area or that put the unit itself at risk will be clearly indicated in this manual.

To indicate these situations, a series of special symbols will be used to clearly identify these situations.

Pay close attention to these symbols and to the messages following them, as your safety and that of others depends on it.

DANGER

- ***The text following this symbol contains information and instructions relating directly to your safety and physical wellbeing.***
- ***Not taking these instructions into account could lead to serious, very serious or even fatal injuries to you and others in the proximities of the unit.***

In the texts following the danger symbol you can also find information on safe procedures during unit installation.

CAUTION

- ***The text following this symbol contains information and instructions relating directly to your safety and physical wellbeing.***
- ***Not taking these instructions into account could lead to minor injuries to you and others in the proximities of the unit.***
- ***Not taking these instructions into account could lead to unit damage.***

In the texts following the caution symbol you can also find information on safe procedures during unit installation.

NOTE

- ***The text following this symbol contains information or instructions that may be of use or that require a more thorough explanation.***
- ***Instructions regarding inspections to be made on unit parts or systems may also be included.***

1.3 Product guide

1.3.1 Classification of indoor unit models

Unit type (indoor unit): RCI, RCIM, RCD, RPC, RPI, RPIM, RPK, RPF, RPFI
Position-separating hyphen (fixed)
Capacity (HP): 0.8, 1, 1.5, 2, 2.5, 3, 4, 5, 6, 8, 10
FS = SYSTEM FREE
N = R410A refrigerant
H = Hotel (RPK-(1.0/1.5) only)
2/3 = series
E = Made in Europe
M = Made in Malaysia
– = Made in Japan
DU = Drain Up (RPIM only)

XXX	–	X.X	FS	N	(H)	(X)	(X)	(-DU)

1.3.2 KPI energy / heat recovery unit classification

KPI energy / heat recovery unit
Position-separating hyphen (fixed)
Capacity (m^3/h): 250, 500, 800, 1000, 1500, 2000, 3000
E = energy recovery
H = heat recovery
2 = series
E = Made in Europe

KPI	–	XXXX	X	2	E

1.3.3 DX-Interface

DX-Interface type
Position-separating hyphen (fixed)
Capacity (HP): 2.0, 2.5, 3.0, 4.0, 5.0, 6.0, 8.0, 10.0
E = Made in Europe

EXV	–	X.X	E

1.3.4 Product guide: indoor units

◆ RCI, RCIM and RCD indoor units

FSN(2/3)(E) indoor units							
RCI		RCIM		RCD			
				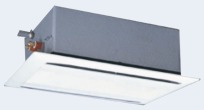			
4-way cassette		4-way cassette (compact)		2-way cassette			
Unit	Code	Unit	Code	Unit	Code		
RCI-1.0FSN3E	7E403001	RCIM-1.0FSN2	60278011	RCD-1.0FSN2	60278029		
RCI-1.5FSN3E	7E403002	RCIM-1.5FSN2	60278013	RCD-1.5FSN2	60278030		
RCI-2.0FSN3E	7E403003	RCIM-2.0FSN2	60278014	RCD-2.0FSN2	60278031		
RCI-2.5FSN3E	7E403004			RCD-2.5FSN2	60278032		
RCI-3.0FSN3E	7E403005			RCD-3.0FSN2	60278033		
RCI-4.0FSN3E	7E403007					RCD-4.0FSN2	60278034
RCI-5.0FSN3E	7E403008					RCD-5.0FSN2	60278035
RCI-6.0FSN3E	7E403009						

Panels							
RCI		RCIM		RCD			
Panel		Panel		Panel			
P-N23NA	70531000	P-N23WAM	60197160	P-N23DNA	60297211	P-N46DNA	60297212

NOTE

- ***Check the exact classification for each unit (model, type, power and series) in Classification of indoor unit models, see on page 4.***
- ***The RCI, RCIM and RCD models must be used in combination with the panels indicated above.***

◆ RPC, RPI and RPIM indoor units

FSN(2/3)E indoor units							
RPC		RPI				RPIM	
				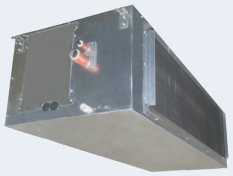			
Ceiling type		Indoor ducted unit					
Unit	Code	Unit	Code	Unit	Code	Unit	Code
		RPI-0.8FSN2E	7E420000			RPIM-0.8FSN2E	7E430000
						RPIM-0.8FSN2E -DU	7E431000
		RPI-1.0FSN2E	7E420001			RPIM-1.0FSN2E	7E430001
						RPIM-1.0FSN2E -DU	7E431001
		RPI-1.5FSN2E	7E420002			RPIM-1.5FSN2E	7E430002
						RPIM-1.5FSN2E -DU	7E431002
RPC-2.0FSN2E	7E440003	RPI-2.0FSN3E	7E424003				
RPC-2.5FSN2E	7E440004	RPI-2.5FSN3E	7E424004				
RPC-3.0FSN2E	7E440005	RPI-3.0FSN3E	7E424005				
RPC-4.0FSN2E	7E440007	RPI-4.0FSN3E	7E424007				
RPC-5.0FSN2E	7E440008	RPI-5.0FSN3E	7E424008				
RPC-6.0FSN2E	7E440009	RPI-6.0FSN3E	7E424009				
				RPI-8.0FSN3E	7E424010		
				RPI-10.0FSN3E	7E424011		

NOTE

Check the exact classification for each unit (model, type, power and series) in Classification of indoor unit models, see on page 4.

◆ RPK, RPF and RPFI indoor units

FSN(H)2(E/M) indoor units					
RPK		RPF		RPFI	
				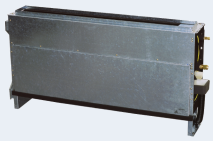	
Wall type		Floor type		Floor concealed type	
Unit	Code	Unit	Code	Unit	Code
RPK-1.0FSN2M	60277941	RPF-1.0FSN2E	7E450001	RPFI-1.0FSN2E	7E460001
RPK-1.0FSNH2M	60277961				
RPK-1.5FSN2M	60277942	RPF-1.5FSN2E	7E450002	RPFI-1.5FSN2E	7E460002
RPK-1.5FSNH2M	60277962				
RPK-2.0FSN2M	60277943	RPF-2.0FSN2E	7E450003	RPFI-2.0FSN2E	7E460003
RPK-2.5FSN2M	60277944	RPF-2.5FSN2E	7E450004	RPFI-2.5FSN2E	7E460004
RPK-3.0FSN2M	60277945				
RPK-4.0FSN2M	60277946				
EV-1.5N(1)	60291612				

(1) For RPK-1.0FSNH2M and RPK-1.5FSNH2M models only.

NOTE

Check the exact classification for each unit (model, type, power and series) in Classification of indoor unit models, see on page 4.

1.3.5 Product guide: complementary systems

◆ KPI energy / heat recovery unit

Complementary systems			
KPI			
Energy recovery		Heat recovery	
Unit	Code	Unit	Code
KPI-252E2E	70601000		
KPI-502E2E	70601001	KPI-502H2E	70601101
KPI-802E2E	70601002	KPI-802H2E	70601102
KPI-1002E2E	70601003	KPI-1002H2E	70601103
KPI-1502E2E	70601004	KPI-1502H2E	70601104
KPI-2002E2E	70601005	KPI-2002H2E	70601105
		KPI-3002H2E	70601107

◆ Econofresh kit

Complementary systems	
Econofresh	
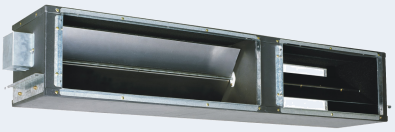	
Unit	Code
EF-5NE	7E774148

NOTE

The EF-5NE unit can only be installed in combination with the RPI-5.0FSN3E indoor ducted unit.

◆ DX-Interface

Complementary systems
DX-Interface

DX-Interface	
Unit	Code
EXV-2.0E	7E619900
EXV-2.5E	7E619901
EXV-3.0E	7E619902
EXV-4.0E	7E619903
EXV-5.0E	7E619904
EXV-6.0E	7E619905
EXV-8.0E	7E619906
EXV-10.0E	7E619907

1.3.6 Accessory code list

HITACHI offers a wide range of different accessories and remote control systems that can be used with the SET FREE and UTOPIA outdoor units. Please consult the corresponding Technical Catalogue for controls and outdoor units.

Name	Description	Code	Figure
B-23H4	Adapter for deodorising filter	60199790	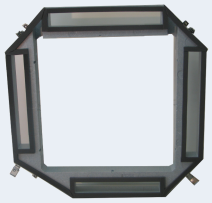
F-23L4-K	Anti-bacteria filter	60199791	
F-23L4-D	Deodorising filter	60199793	
F-46L4-D	Deodorising filter	60199794	
PDF-23C3	Duct connecting flange	60199795	
PDF-46C3	Duct connecting flange	60199796	
OACI-232	Outdoor air inlet kit	60199797	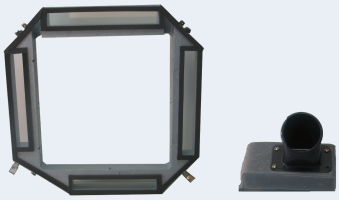
PD-75	Outdoor air inlet kit	60199798	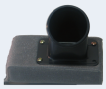
PI-23LS5	3-way outlet parts	60199799	
TKCI-232	T-shaped duct connection kit	60199801	

Name	Description	Code	Figure
DU-M1E	Drain pump kit for RPIM units	7E897304	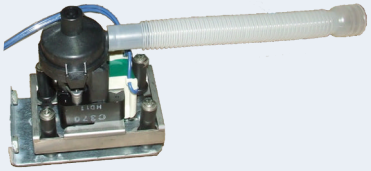
EV-1.5N	Electronic expansion valve (RPK-(1.0/1.5)FSNH2M)	60291612	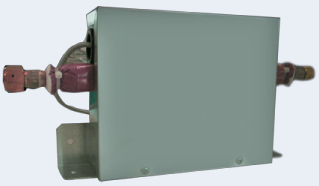
TE-03N	Branch pipe UTOPIA (pipe kit)	70800007	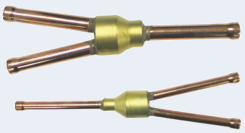
TE-04N	Branch pipe UTOPIA (pipe kit)	70800008	
TE-56N	Branch pipe UTOPIA (pipe kit)	70800009	
TE-08N	Branch pipe UTOPIA (pipe kit)	70800003	
TE-10N	Branch pipe UTOPIA (pipe kit)	70800004	
TRE-06N	Distributor UTOPIA	70800005	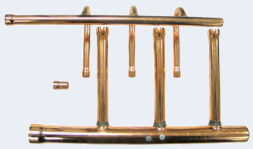
TRE-810N	Distributor UTOPIA	70800010	
QE-810N	Distributor UTOPIA	70800006	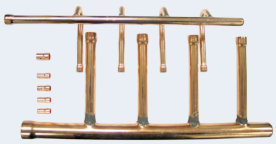
E-102SN2	Branch pipe (multikit)	70524001	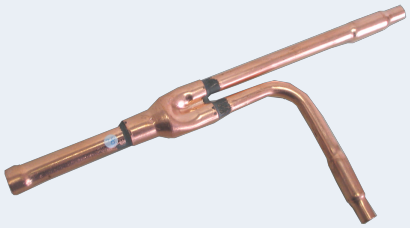
E-162SN2	Branch pipe (multikit)	70524002	
E-242SN2	Branch pipe (multikit)	70524004	
E-302SN2	Branch pipe (multikit)	70524005	
E-52XN2	Branch pipe (multikit)	70525000	
E-102XN2	Branch pipe (multikit)	70525001	
E-162XN2	Branch pipe (multikit)	70525002	
E-202XN2	Branch pipe (multikit)	70525003	
E-242XN2	Branch pipe (multikit)	70525004	
E-322XN2	Branch pipe (multikit)	70525005	
MH-84AN	Distributor SET FREE	70522007	
MH-108AN	Distributor SET FREE	70522008	

Name	Description	Code	Figure
ER-500	Energy exchanger for KPI	70550001	
ER-800		70550002	
ER-1000		70550003	
ER-1500		70550004	
ER-2000		70550005	
SLT-30-200-L600	Noise damper	70550200	
SLT-30-250-L600		70550201	
SLT-30-300-L600		70550202	
SLT-30-355-L600		70550203	
SLT-30-450-L600		70550204	

HITACHI
Inspire the Next

2. Unit installation

Index

2.1 RCI - 4-way cassette 15
- 2.1.1 Accessories supplied with the unit 15
- 2.1.2 Unit installation 15
- 2.1.3 Accessories supplied with the air panel 19
- 2.1.4 Air panel installation 19

2.2 RCIM - 4-way cassette (compact) 24
- 2.2.1 Accessories supplied with the unit 24
- 2.2.2 Unit installation 24
- 2.2.3 Accessories supplied with the air panel 28
- 2.2.4 Air panel installation 28

2.3 RCD - 2-way cassette 30
- 2.3.1 Accessories supplied with the unit 30
- 2.3.2 Unit installation 30
- 2.3.3 Accessories supplied with the air panel 34
- 2.3.4 Air panel installation 34

2.4 RPC - Ceiling 38
- 2.4.1 Accessories supplied with the unit 38
- 2.4.2 Unit installation 38
- 2.4.3 Suspension bracket installation 38
- 2.4.4 Indoor unit installation 39

2.5 RPI(M) - Ducted indoor unit (0.8-6.0)FSN(2/3)E(-DU) 42
- 2.5.1 Accessories supplied with the unit 42
- 2.5.2 Unit installation 42
- 2.5.3 Air duct connection 45
- 2.5.4 Maintenance of the suction air filter 46
- 2.5.5 Change in the air suction direction 46

2.6 RPI - Ducted indoor unit (8-10)FSN3E 48
- 2.6.1 Accessories supplied with the unit 48
- 2.6.2 Unit installation 48
- 2.6.3 Air duct connection 50
- 2.6.4 Maintenance of the suction air filter 50

2.7 RPK - FSN2M Wall mounted 51
- 2.7.1 Accessories supplied with the unit 51
- 2.7.2 Unit installation 51
- 2.7.3 Mounting bracket dimensions 56

2.8 RPF - Floor type, RPFI - Floor concealed type 58
- 2.8.1 Accessories supplied with the unit 58
- 2.8.2 Unit installation 58
- 2.8.3 Change in the air outlet direction (RPFI units) 61
- 2.8.4 RPF: Optional PC-ART remote control location 61

2.9 KPI energy / heat recovery unit 62
- 2.9.1 Accessories supplied with the unit 62
- 2.9.2 Unit installation 62

2.9.3 Duct connection 64
2.10 Econofresh Kit 67
2.10.1 Accessories supplied with the unit 67
2.10.2 Unit installation 67
2.10.3 Maintenance 68
2.11 DX-Interface 69
2.11.1 Accesories supplied with the unit 69
2.11.2 Mounting method 69
2.11.3 Thermistor installation 70
2.12 Optional accessories 73
2.12.1 Outdoor air inlet 73
2.12.2 Filters 78

2.1 RCI - 4-way cassette

2.1.1 Accessories supplied with the unit

Check that the following accessories are supplied with the unit.

NOTE

Please contact your HITACHI distributor if any of the accessories has not been supplied with the unit.

Accessory	Appearance	Quantity	Purpose
Template		1	To define the position of the unit and adjust the necessary opening in the false ceiling.
Scale		1	
Philips head screw		4	To adjust the template.
Washer with insulation		4	For unit installation.
Flat washer		4	
Drain hose		1	For the drain hose connection.
Wire clamp		2	

Applicable panel

Indoor unit	Applicable air panel
RCI-(1.0-6.0)	P-N23NA

2.1.2 Unit installation

Initial checks

Check that there is enough space between the false ceiling and the ceiling of the room to house the unit. Its height must be less than the measured distance. Consult the corresponding chapter of the Technical Catalogue for information on the unit measurements.

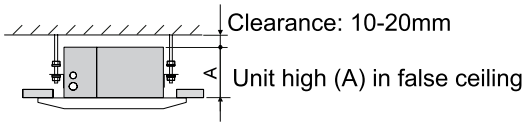

Before starting installation, plan the direction of the pipes and wiring required. Also bear in mind that there must be enough space around the unit for installation and maintenance.

Install a service hatch near the pipe connection area and electrical junction box for installation and maintenance work.

Single installation

1. Refrigerant and drain connection.
2. Walls close to the unit.
3. Unit inspection and maintenance access.

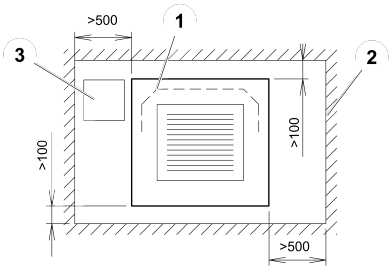

Combined installation

1. Refrigerant and drain connection.
2. Unit inspection and maintenance access.
3. Walls close to the unit.

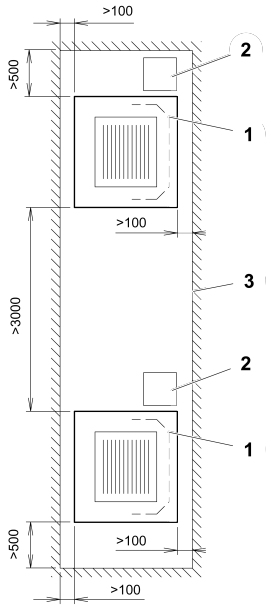

Check that the ceiling surface where the air panel is to be installed is completely horizontal.

Check that the drain hose can be installed maintaining the necessary down-slope.

Installation

Cut the area of the unit in the false ceiling and reinforce the opening made.

Install the M10 (3/8) suspension bolts depending on the type of surface:

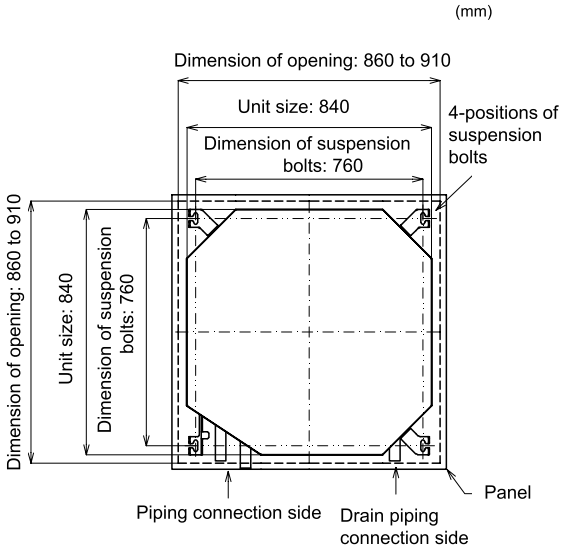

Concrete beams

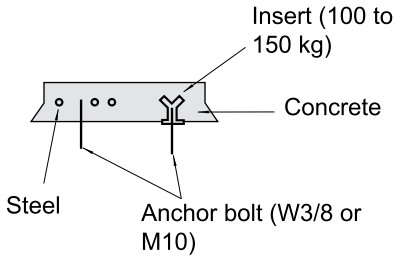

Steel beams

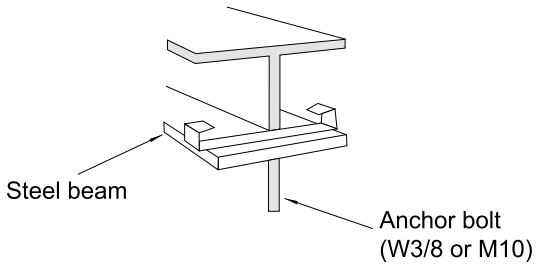

Wooden beams

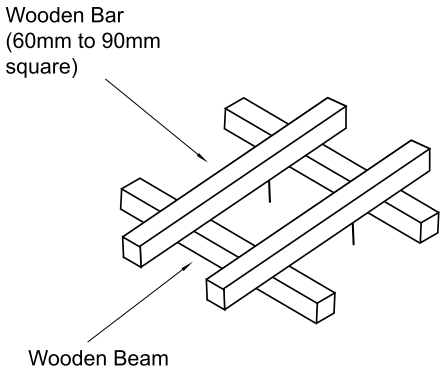

1 Suspension bolts (field-supplied)

2 Nut (field-supplied)

3 Washer with insulation (field-supplied)

4 Suspension bracket (Attached indoor unit)

5 Washer (Accessory)

6 Nut (field-supplied)

7 Ceiling

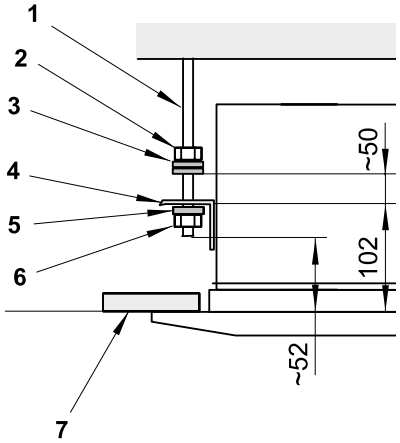

Thread on the nuts and fit the washers for all the bolts, as shown in the figure.

Fit two suspension brackets onto the nut and washer of each bolt, starting on one side.

Check that the nuts and washers are correctly secured with the suspension bracket retainers and fit the brackets onto their nuts and washers on the other side.

Fit the washers with the insulation facing downwards, as shown in the figure. Bear in mind the position of the side for pipe connection before lifting the indoor unit.

Where a false ceiling is already installed, install and prepare the pipes and cables on the indoor unit before lifting it.

CAUTION

- ***Before lifting the unit, prepare any necessary means (ladders, scaffolding, elevator platform, etc.) and check that the current safety regulations in the place where the installation is taking place are met.***
- ***Check that the lifting work can be carried out without the risk of injuries to you or others in the surrounding area.***
- ***Request the assistance of another person to lift the unit.***

Lift the unit carefully, without exercising pressure on the drain pan.

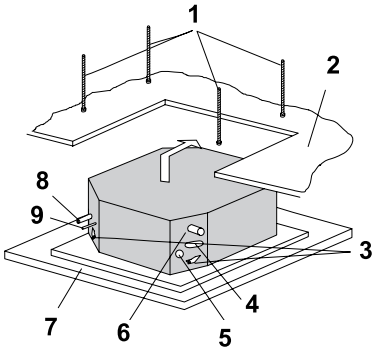

1 Suspension bolts (4)

2 False ceiling

3 Suspension bracket

4 Open the knockout hole for wiring (Ø32,5)

5 Wiring hole

6 Drain piping connection

7 Panel (to be installed later, shown only as reference

8 Gas piping connection

9 Liquid piping

Fit the nuts, flat washers and spring washers supplied (4 of each) to secure the indoor unit.

Check that the condensate discharge system in the indoor unit works correctly. To do so, check the level of the drain pan using a spirit level.

Adjusting the space between the indoor unit and the opening in the false ceiling

Adjust the indoor unit to the correct position using the template for the installation.

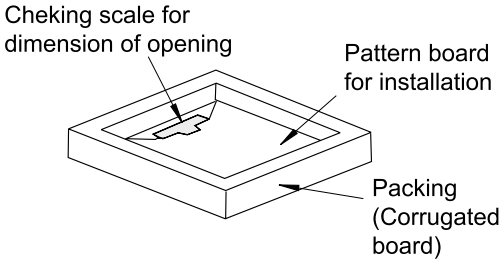

For panelled ceilings:

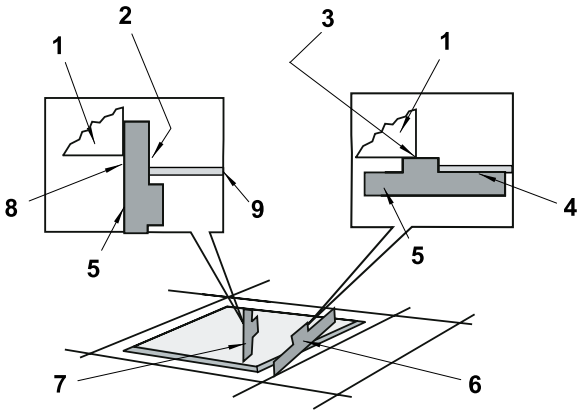

1 Indoor unit

2 Attach this side of the scale to the inner side of the opening of the ceiling

3 Attach this side of the scale to the lower side of the unit

4 Attach this side of the scale to the ceiling panel

5 Cheking scale

6 Check the height of the ceiling at each corner of the unit

7 Check the dimension of the opening at each side of the unit

8 Attach this side of the scale to the outer side of the opening

9 Ceiling panel

For ceilings without panels:

1 Pattern paper for installation

2 Dimension for opening

3 Screw (M6) for fixing the air panel to the unit

4 Pattern board for installation

5 Surface of ceiling

6 Suspension bolt

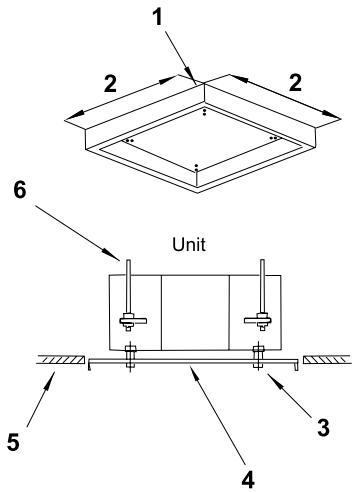

Once adjusted, tighten the suspension bracket nuts.

Apply a thread-locking product to the bolts and nuts to prevent them from loosening. Otherwise, abnormal noise may be caused by mechanical vibrations and the indoor unit may become loose.

2.1.3 Accessories supplied with the air panel

Check that the following accessories are supplied with the unit.

NOTE

Please contact your HITACHI distributor if any of the accessories has not been supplied with the unit.

Accessory	Appearance	Quantity	Purpose
Long bolt (M6 x 50)		4	For panel fixing.

2.1.4 Air panel installation

CAUTION

Take care while the air panel is unpacked and protect it by placing it on insulating or soft material so as not to scratch the sealant insulation.

Location of the suspension brackets

Make sure the suspension brackets on the indoor unit are approximately 102 mm in height above the false ceiling.

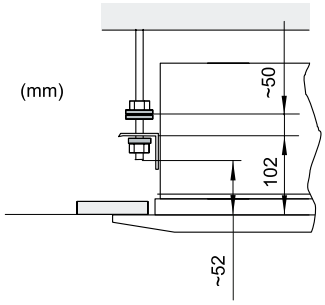

Remove the air inlet grille from the air panel

Nº	Part
1	Take up the grille keeping it inclined
2	45° (correct)
3	Air inlet grille
4	Air filter
5	Wrong
6	Air panel
7	Ceiling

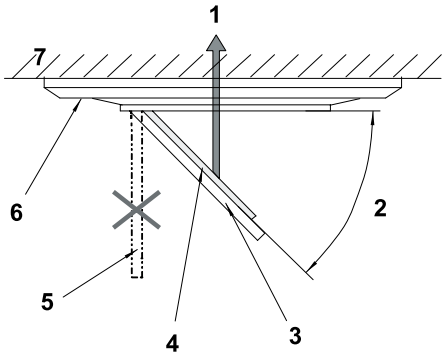

Open the air inlet grille until it is at an angle of approximately 45° in relation to the air panel surface.

Lift the grille while keeping it tilted.

CAUTION

Do not allow the grille to swing freely or the securing mechanism will break.

Air panel installation

Remove the hood from the 4 corners.

Press the securing tabs in the direction of the arrow, following the order -a-, -b- and -c- and lift the corner of the cover. Then move it in direction -d-, press the L-type hook and remove the cover.

Pull the U-shaped hook (in 2 positions) located on the side of the indoor unit downwards.

Adjust the corner of the indoor unit at the refrigerant connection part to the position marked as Ref. Pipe, and attach the C-shaped hinge (2 positions) to the U-shaped hooks (2 positions) in a temporary position.

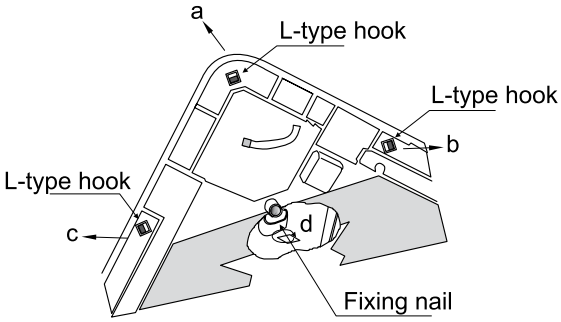

1 Indoor unit

2 U-shaped hook

3 Fixing plate

4 Air panel

5 Long screw (4)

6 C-shaped hinge (2)

7 Stamp “Ref.pipe”

8 Refrigerant pipe connections

9 Electrical control box

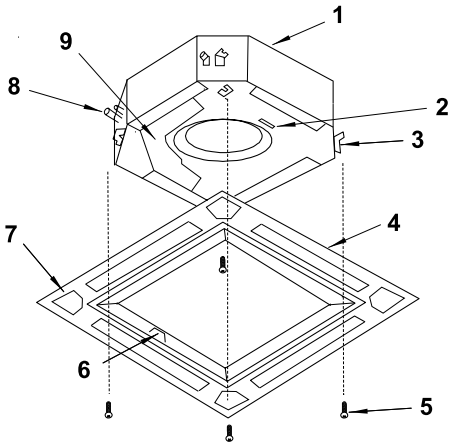

Fit the air panel in the attachment position using the set screws supplied (M6 x 50).

Nº	Part
1	Indoor unit undersurface
2	Fix screw until this end touches it
3	Fixing plate (Indoor unit side)
4	Sealing gasket
5	Long screw
6	Fixing plate (air panel side)
7	Panel
8	False ceiling

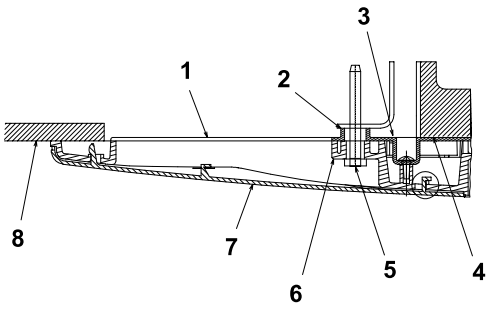

Check that there are no gaps in the touching surface between the indoor unit and the air panel. Gaps may cause air leaks or condensation.

Secure the corner covers after fitting the air panel:

a) Attach the tab at the rear of the corner cover to the panel pin.

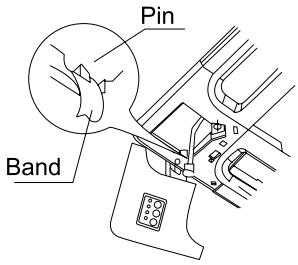

b) Attach the L-shaped stop located on the rear of the corner cover to the square hole in the air panel.

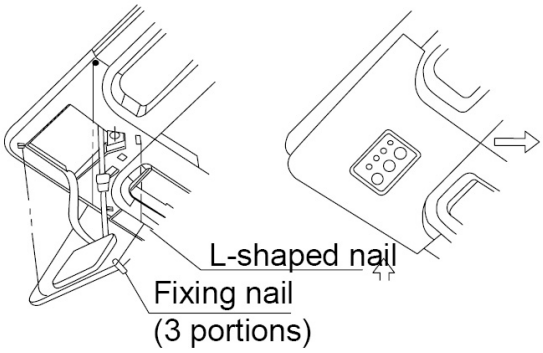

Considerations following air panel installation

Tighten the long bolts appropriately. Otherwise, installation faults may be caused.

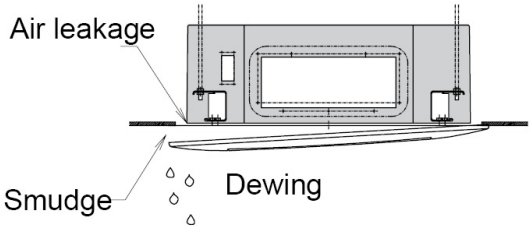

Readjust the height of the indoor unit if gaps are seen around it. Use long bolts and nuts for readjustment, as indicated below.

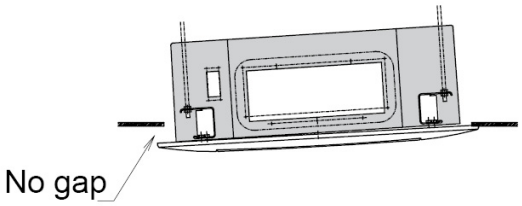

Once the air panel is installed, the final height of the indoor unit can be adjusted using a wrench through the corner cover.

Excessively adjusting the height leads to condensation leaks from the drain pan.

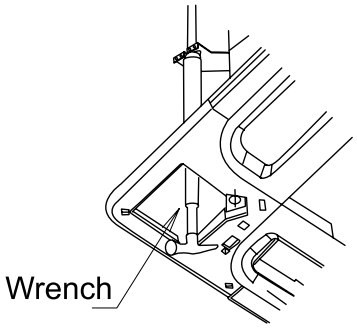

CAUTION

Do not move the air louver by hand. The drive mechanism may be damaged.

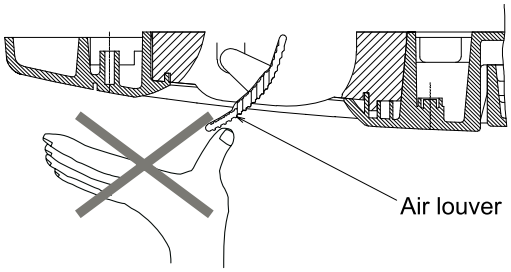

Where the corner cover is to be removed after installing the air panel:

Insert a coin or a flat-tipped screwdriver into the groove -1- and turn it gently downwards. Perform the same operation in grooves -2- and -3-.

Lift the receiver and, once the securing tabs (3 positions) have been removed, remove it.

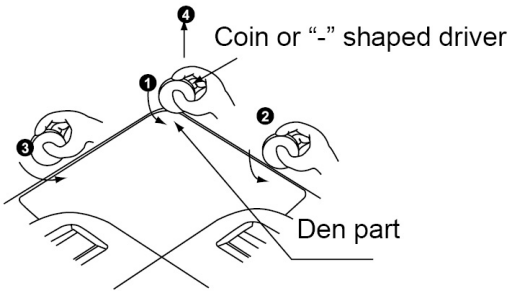

Electrical connection of the air panel

CAUTION

Switch off the power supply to the unit before coupling the connectors, otherwise the automatic louver will not work.

The following connector is used with the air panel (see from the lower surface of the air panel without the air inlet grille).

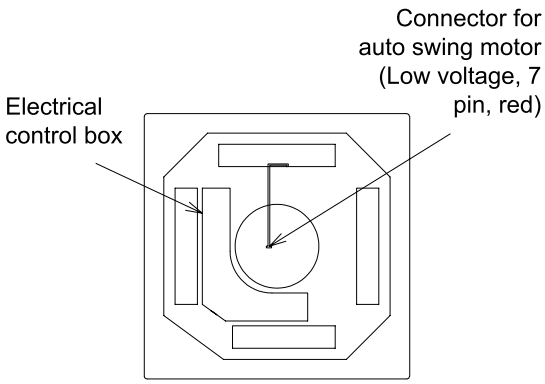

Couple the connectors as indicated in the figure (view of the electrical box from above).

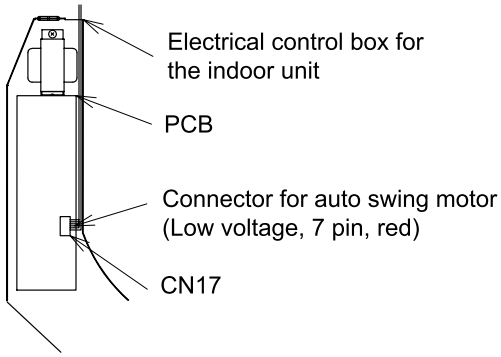

2.2 RCIM - 4-way cassette (compact)

2.2.1 Accessories supplied with the unit

Check that the following accessories are supplied with the unit.

NOTE

Please contact your HITACHI distributor if any of the accessories has not been supplied with the unit.

Accessory	Appearance	Quantity	Purpose
Scale		1	For unit installation.
Washer with insulation		4	
Flat washer		4	
Drain hose		1	For the drain hose connection.
Wire clamp		2	
Insulation (large size)		1	For the refrigerant pipe connection.
Insulation (small size)		1	
Insulation (5t)		1	For drain pipe insulation.
Clamp		6	To attach the refrigerant pipe insulation

2.2.2 Unit installation

Initial checks

Check that there is enough space between the false ceiling and the ceiling of the room to house the unit. Its height must be less than the measured distance. Consult the corresponding chapter of the Technical Catalogue for information on the unit measurements.

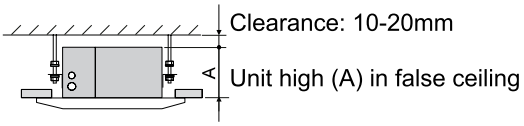

Before starting installation, plan the direction of the pipes and wiring required. Also bear in mind that there must be enough space around the unit for installation and maintenance.

Install a service hatch near the pipe connection area and electrical junction box for installation and maintenance work.

Single installation

1. Refrigerant and drain connection.
2. Walls close to the unit.
3. Unit inspection and maintenance access.

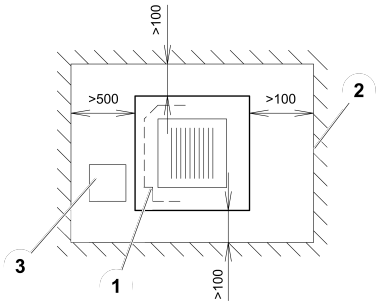

Combined installation

1. Refrigerant and drain connection.
2. Walls close to the unit.
3. Unit inspection and maintenance access.

Check that the drain hose can be installed maintaining the necessary down-slope.

Check that the ceiling surface where the air panel is to be installed is completely horizontal.

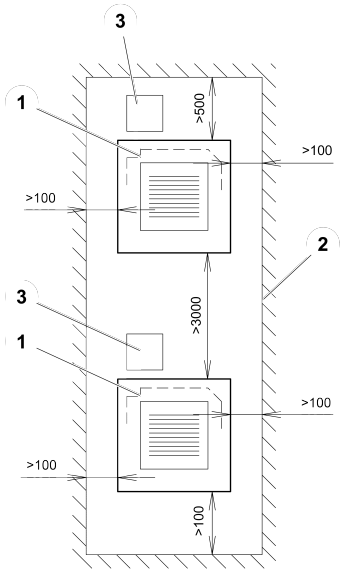

Installation

Cut the area of the unit in the false ceiling and reinforce the opening made.

Install the M10 (3/8”) suspension bolts depending on the type of surface:

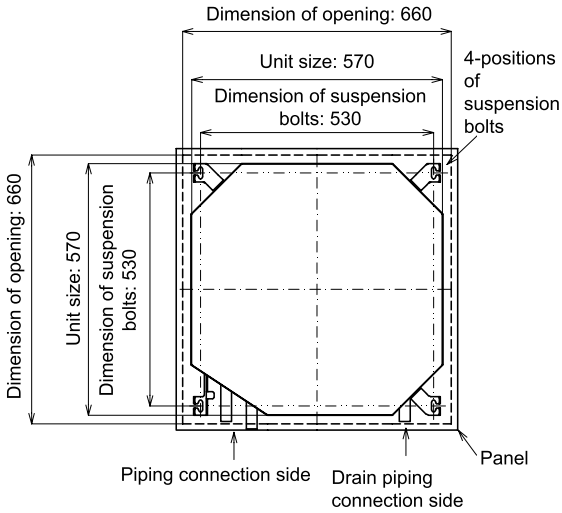

Concrete beams

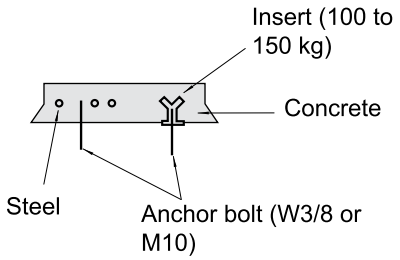

Steel beams

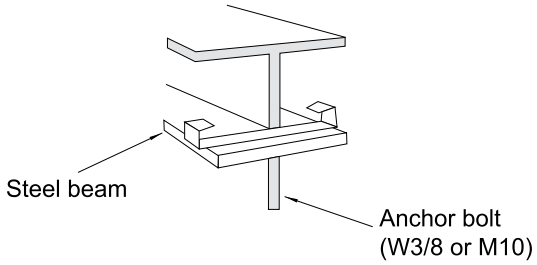

Wooden beams

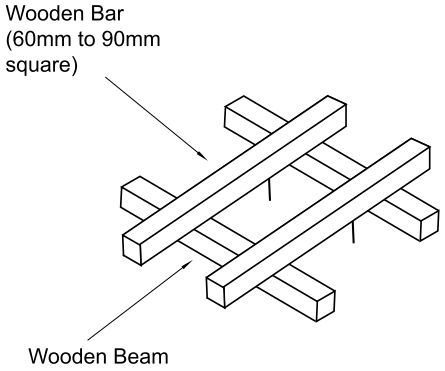

1 Suspension bolts (field-supplied)

2 Nut (field-supplied)

3 Washer with insulation (field-supplied)

4 Suspension bracket (Attached indoor unit)

5 Washer (Accessory)

6 Nut (field-supplied)

7 Ceiling

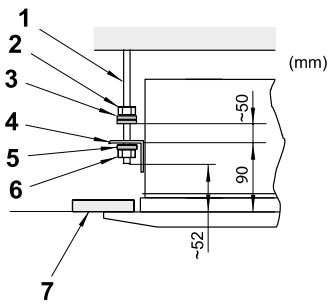

Thread on the nuts and fit the washers for all the bolts, as shown in the figure.

Fit two suspension brackets onto the nut and washer of each bolt, starting on one side.

Check that the nuts and washers are correctly secured with the suspension bracket retainers and fit the brackets onto their nuts and washers on the other side.

Fit the washers with the insulation facing downwards, as shown in the figure. Bear in mind the position of the side for pipe connection before lifting the indoor unit.

Where a false ceiling is already installed, install and prepare the pipes and cables on the indoor unit before lifting it.

CAUTION

- ***Before lifting the unit, prepare any necessary means (ladders, scaffolding, elevator platform, etc.) and check that the current safety regulations in the place where the installation is taking place are met.***
- ***Check that the lifting work can be carried out without the risk of injuries to you or others in the surrounding area.***
- ***Request the assistance of another person to lift the unit.***

Lift the unit carefully, without exercising pressure on the drain pan.

Fit the nuts, flat washers and spring washers supplied (4 of each) to secure the indoor unit.

Check that the condensate discharge system in the indoor unit works correctly. To do so, check the level of the drain pan using a spirit level.

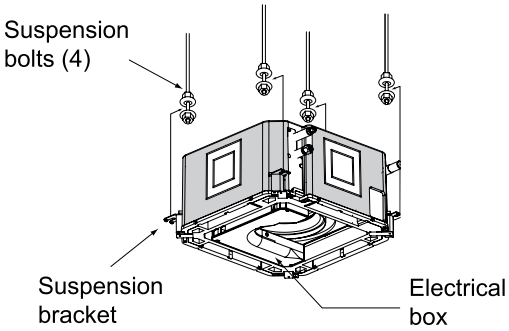

Adjusting the space between the indoor unit and the opening in the false ceiling

Adjust the indoor unit to the correct position using the template for the installation.

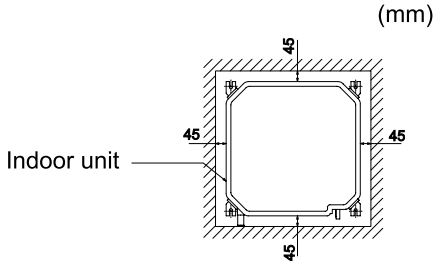

1 Indoor unit

2 Attach this side of the scale to the inner side of the opening of the ceiling

3 Attach this side of the scale to the lower side of the unit

4 Attach this side of the scale to the ceiling panel

5 Cheking scale

6 Check the height of the ceiling at each corner of the unit

7 Check the dimension of the opening at each side of the unit

8 Attach this side of the scale to the outer side of the opening

9 Ceiling Panel

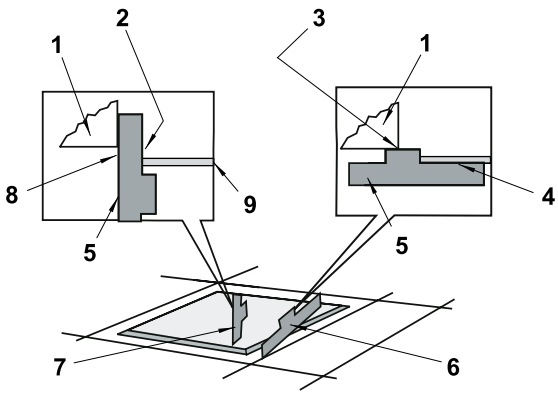

For panelled ceilings.

Once adjusted, tighten the suspension bracket nuts.

Apply a thread-locking product to the bolts and nuts to prevent them from loosening. Otherwise, abnormal noise may be caused by mechanical vibrations and the indoor unit may become loose.

2.2.3 Accessories supplied with the air panel

Check that the following accessories are supplied with the unit.

NOTE

Please contact your HITACHI distributor if any of the accessories has not been supplied with the unit.

Accessory	Appearance	Quantity	Purpose
Long bolt (M6 x 50)		4	For panel fixing.

2.2.4 Air panel installation

CAUTION

Take care while the air panel is unpacked and protect it by placing it on insulating or soft material so as not to scratch the sealant insulation.

Location of the suspension brackets

Make sure the suspension brackets on the indoor unit are approximately 90 mm in height above the false ceiling.

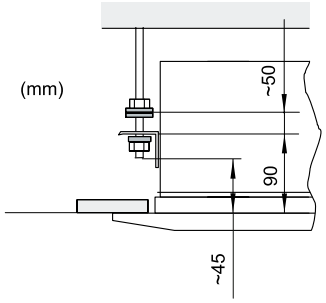

Remove the air inlet grille from the air panel

Nº	Part
1	Take up the grille keeping it inclined
2	45° (correct)
3	Air inlet grille
4	Air filter
5	Wrong
6	Air panel
7	Ceiling

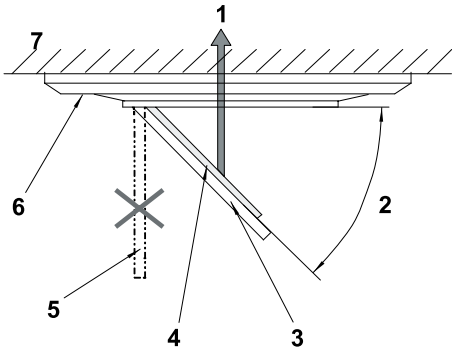

Open the air inlet grille until it is at an angle of approximately 45° in relation to the air panel surface.

Lift the grille while keeping it tilted.

CAUTION

Do not allow the grille to swing freely or the securing mechanism will break.

Air panel installation

Remove the screw located next to mark -a-.

Press the securing tabs in the direction of the arrow -b-.

Remove the corner cover by pulling it in direction -c-.

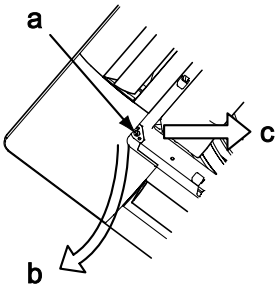

Thread the long screw to secure the air panel temporarily.

Adjust the corner of the indoor unit at the refrigerant connection part to the position marked as PIPE SIDE.

Attach the air panel to the long screw (2 position) so that it can be temporarily fitted and adjusted.

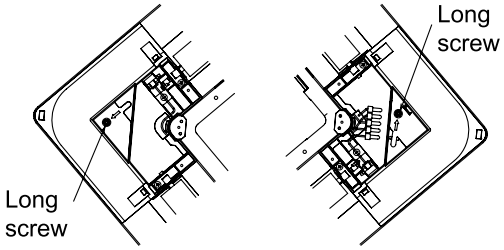

Nº	Part
1	Electric control box
2	Refrigerant pipe connections
3	Indoor unit
4	Securing plate
5	Air panel
6	Long screw (4)
7	Indication “PIPE SIDE”

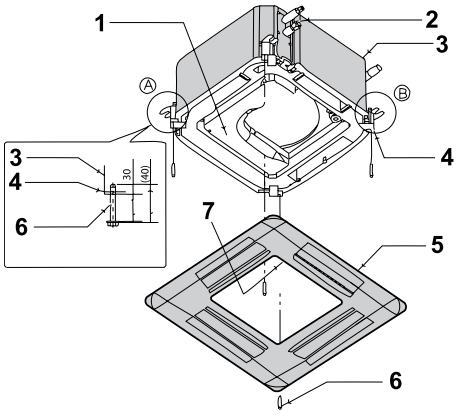

Fit the air panel in the attachment position using the screws supplied (M6 x 50). First secure the screws in positions -A- and -B- and then the rest.

Check that there are no gaps in the touching surface between the indoor unit and the air panel. Gaps may cause air leaks or condensation.

2.3 RCD - 2-way cassette

2.3.1 Accessories supplied with the unit

Check that the following accessories are supplied with the unit.

NOTE

Please contact your HITACHI distributor if any of the accessories has not been supplied with the unit.

Accessory	Appearance	Quantity	Purpose
Template		1	To define the position of the unit and adjust the necessary opening in the false ceiling.
Scale		1	
Philips head screw		6	To adjust the template.
Flat washer		8	For unit suspension.
Wire clamp		1	For the drain hose connection.
Insulation (26ID x 100 mm)		1	For the refrigerant pipe connection.
Insulation (26ID x 85 mm)		1	
Clamp		8	To attach the refrigerant pipe insulation

Applicable air panel

Indoor unit	Applicable air panel
RCIM-(1.0-3.0)	P-N23DNA
RCIM-(4.0-5.0)	P-N26DNA

2.3.2 Unit installation

Initial checks

Check that there is enough space between the false ceiling and the ceiling of the room to house the unit. Its height must be less than the measured distance. Consult the corresponding chapter of the Technical Catalogue for information on the unit measurements.

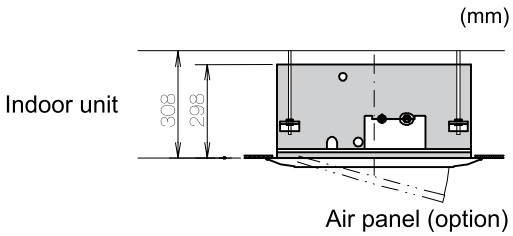

Before starting installation, plan the direction of the pipes and wiring required. Also bear in mind that there must be enough space around the unit for installation and maintenance.

Install a service hatch near the pipe connection area and electrical junction box for installation and maintenance work.

Single installation

1. Refrigerant and drain connection.
2. Walls close to the unit.
3. Unit inspection and maintenance access.

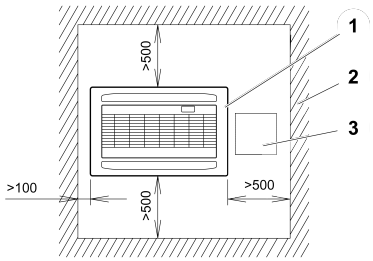

Combined installation

1. Refrigerant and drain connection.
2. Walls close to the unit.
3. Unit inspection and maintenance access.

Check that the ceiling surface where the air panel is to be installed is completely horizontal.

Check that the drain hose can be installed maintaining the necessary down-slope.

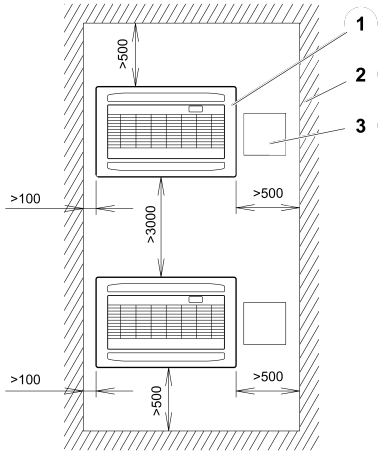

Installation

Cut the area of the unit in the false ceiling and reinforce the opening made.

Install the M10 (3/8”) suspension bolts depending on the type of surface:

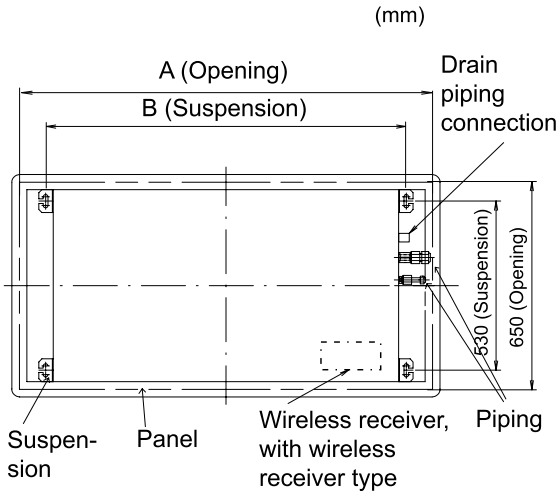

Concrete beams

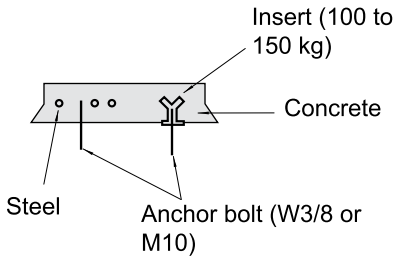

Steel beams

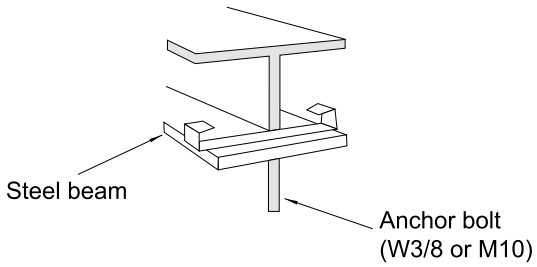

Wooden beams

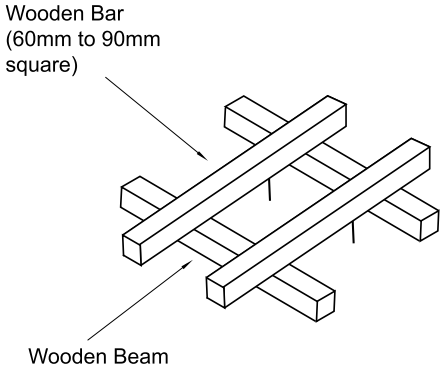

1 Suspension bolts (field-supplied)

2 Nut (field-supplied)

3 Washer with insulation (field-supplied)

4 Suspension bracket (Attached indoor unit)

5 Washer (Accessory)

6 Nut (field-supplied)

7 Ceiling

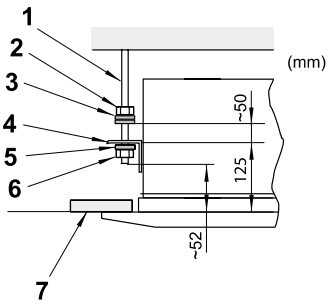

Thread on the nuts and fit the washers for all the bolts, as shown in the figure.

Fit two suspension brackets onto the nut and washer of each bolt, starting on one side.

Check that the nuts and washers are correctly secured with the suspension bracket retainers and fit the brackets onto their nuts and washers on the other side.

Fit the washers with the insulation facing downwards, as shown in the figure. Bear in mind the position of the side for pipe connection before lifting the indoor unit.

Where a false ceiling is already installed, install and prepare the pipes and cables on the indoor unit before lifting it.

CAUTION

- ***Before lifting the unit, prepare any necessary means (ladders, scaffolding, elevator platform, etc.) and check that the current safety regulations in the place where the installation is taking place are met.***
- ***Check that the lifting work can be carried out without the risk of injuries to you or others in the surrounding area.***
- ***Request the assistance of another person to lift the unit.***

Lift the unit carefully, without exercising pressure on the drain pan.

Fit the nuts, flat washers and spring washers supplied (4 of each) to secure the indoor unit.

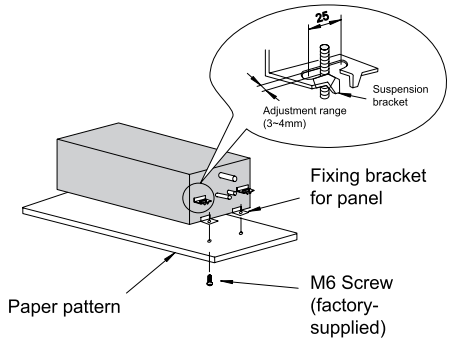

Check that the condensate discharge system in the indoor unit works correctly. To do so, check the level of the drain pan using a spirit level or a clear flexible pipe full of water. The side of the unit on which the drain hose is located must be around 5 mm lower than the other sides.

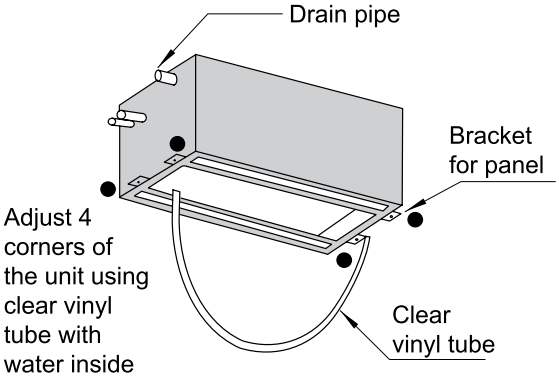

Adjusting the space between the indoor unit and the opening in the false ceiling

Adjust the indoor unit to the correct position using the template and scale for the installation.

For panelled ceilings.

1 Indoor unit

2 Attach this side of the scale to the inner side of the opening of the ceiling

3 Attach this side of the scale to the lower side of the unit

4 Attach this side of the scale to the ceiling panel

5 Cheking scale

6 Check the height of the ceiling at each corner of the unit

7 Check the dimension of the opening at each side of the unit

8 Attach this side of the scale to the outer side of the opening

9 Ceiling panel

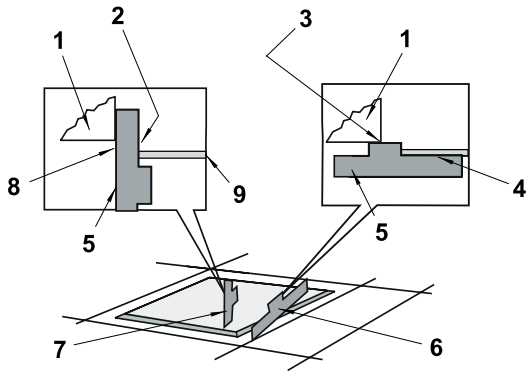

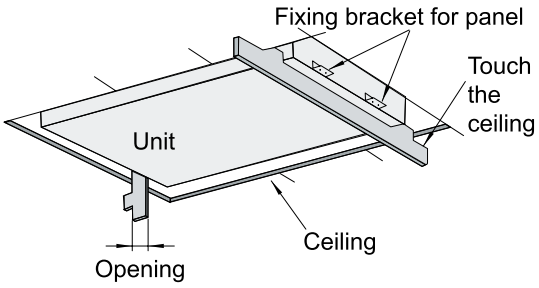

For ceilings without panels.

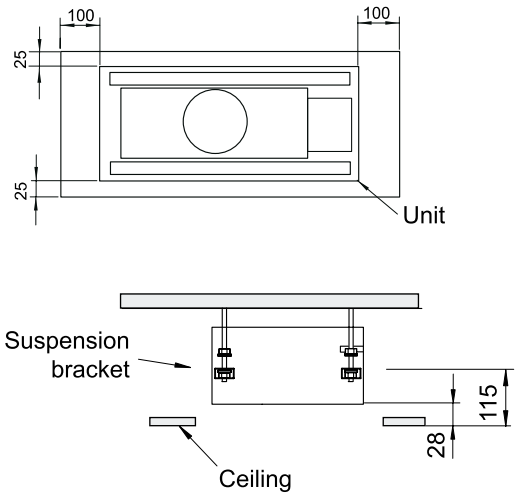

Once adjusted, tighten the suspension bracket nuts.

Apply a thread-locking product to the bolts and nuts to prevent them from loosening. Otherwise, abnormal noise may be caused by mechanical vibrations and the indoor unit may become loose.

2.3.3 Accessories supplied with the air panel

Check that the following accessories are supplied with the unit.

NOTE

Please contact your HITACHI distributor if any of the accessories has not been supplied with the unit.

Accessory	Appearance	Quantity	Purpose
Long bolt (M6 x 50)		4	For panel fixing.
Long bolt (M6 x 30)		2	For panel fixing (only for air panel P-N46DNA)

2.3.4 Air panel installation

CAUTION

Take care while the air panel is unpacked and protect it by placing it on insulating or soft material so as not to scratch the sealant insulation.

Location of the suspension brackets

Make sure the suspension brackets on the indoor unit are approximately 115 mm in height above the false ceiling.

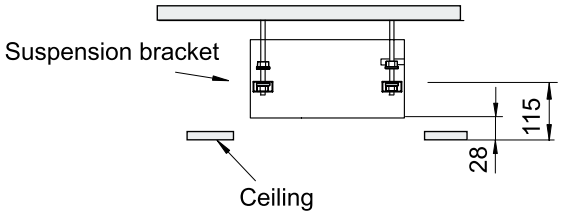

(mm)

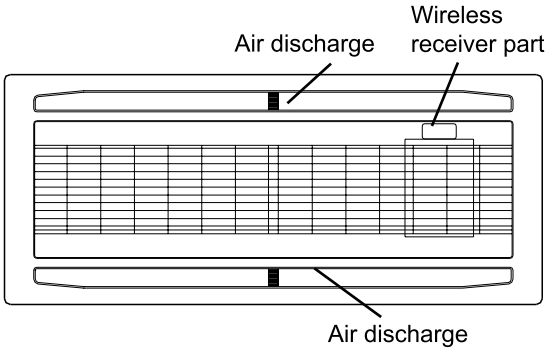

Remove the air inlet grille from the air panel

Nº	Part
1	Take up the grille keeping it inclined
2	Approx. 40° (correct)
3	Air inlet grille
4	Air filter
5	Wrong
6	Air panel
7	Ceiling

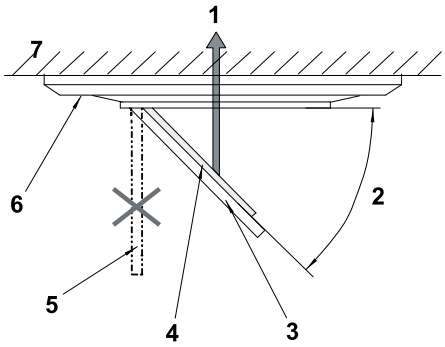

Open the air inlet grille until it is at an angle of approximately 40° in relation to the air panel surface.

Lift the grille while keeping it tilted.

CAUTION

Do not allow the grille to swing freely or the securing mechanism will break.

Air panel installation

Hang the air panel from the indoor unit, attaching the cables in a U-shape from the panel to the unit hook cables.

Check that the position of the electrical junction box on the indoor unit coincides with the position of the air panel wiring outlet.

Position the panel on the indoor unit and secure using the long screws supplied.

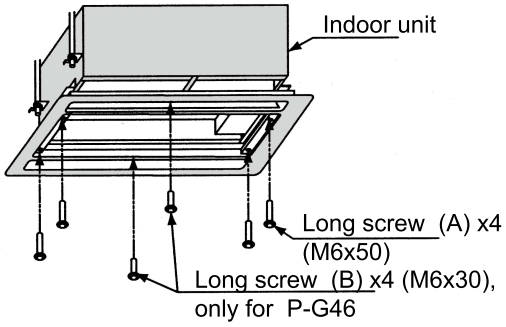

CAUTION

- ***To avoid damaging the panel, the long screws securing it are fitted with stops to stop tightening at the set position.***
- ***Where the air panel does not reach the ceiling surface or in the event of air leaks on the touching surface, readjust the installation height of the indoor unit.***

Check that there are no gaps in the touching surface between the indoor unit and the air panel. Gaps may cause air leaks or condensation.

Considerations following air panel installation

CAUTION

Do not move the air louver by hand. The drive mechanism may be damaged.

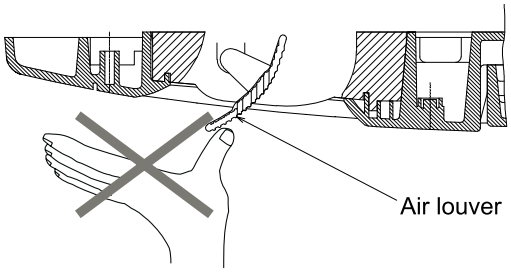

Electrical connection of the air panel

CAUTION

Switch off the power supply to the unit before coupling the connectors, otherwise the automatic louver will not work.

The following connector is used with the air panel (see from the lower surface of the air panel without the air inlet grille).

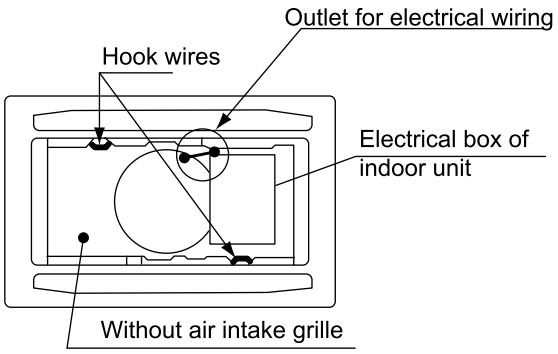

Couple the connectors as indicated in the figure (view of the electrical box from above).

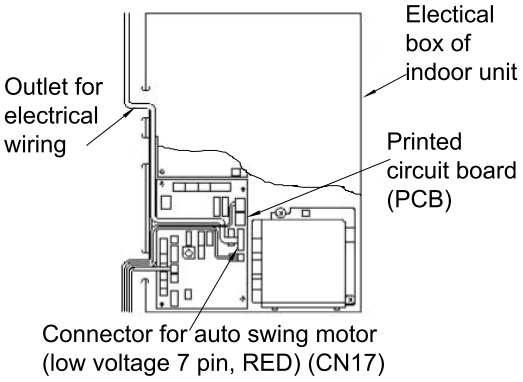

2.4 RPC - Ceiling

2.4.1 Accessories supplied with the unit

Check that the following accessories are supplied with the unit.

NOTE

Please contact your HITACHI distributor if any of the accessories has not been supplied with the unit.

Accessory	Appearance	Quantity	Purpose
Suspension bracket		2	For unit suspension.
Set screw		2	For the sealing plate.
Drain hose		1	For the drain hose connection.
Wire clamp		2	
Insulation material (5T x 200 x 200)		1	For the drain hose connection.
Sealing plate (0.8T × 118 × 42)		1	To seal the die-cut hole.
Sealing plate		1	For the installation of refrigerant pipes.

2.4.2 Unit installation

Initial checks

Check that there is enough space around the unit. Consult the corresponding chapter of the Technical Catalogue for information on the unit measurements.

Before starting installation, plan the direction of the pipes and wiring required. Also bear in mind that there must be enough space around the unit for installation and maintenance.

Check that the ceiling surface where the unit is to be installed is completely horizontal.

Check that the drain hose can be installed maintaining the necessary down-slope.

2.4.3 Suspension bracket installation

Cut out the printed template on the inside of the unit's cardboard packaging and follow the instructions printed on it.

The following information is also included on the template:

1 Separation of the sling bolt for installation positions (a) and (b).
2 Positions of the holes for the refrigerant pipes.
3 Positions of the holes for the drain pipes.

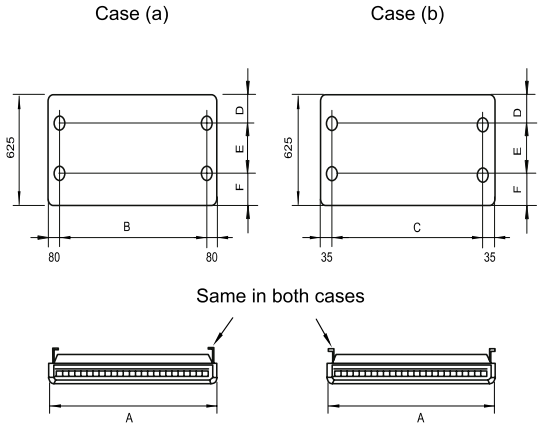

The suspension bracket can be hung in two positions:

Model	A	B	C	D	E	F
RPC-2.0FSN2E	1094	920	1010	150	220	255
RPC-(2.5/3.0)FSN2E	1314	1140	1230	150	220	255
RPC-4.0FSN2E	1314	1140	1230	110	280	235
RPC-(5.0/6.0)FSN2E	1574	1400	1490	110	280	235

Select the suspension bracket system in line with installation requirements.

NOTE

Installation position (a) is recommended for a partially hidden installation.

Fit the suspension brackets on the sling bolts or the anchor bolts and securing using the nuts and washers supplied.

Apply a thread-locking product to the bolts and nuts to prevent them from loosening. Otherwise, abnormal noise may be caused by mechanical vibrations and the indoor unit may become loose.

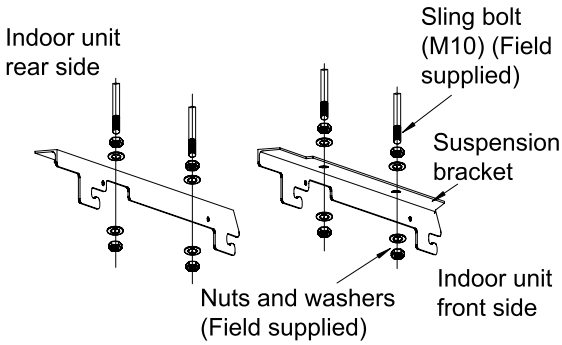

2.4.4 Indoor unit installation

CAUTION

To avoid damage to the resin side covers, remove them before lifting or moving the indoor unit.

Thread the nuts and fit the washers on all the bolts.

Fit the securing bolts onto the nut and washer of each bolt, starting on one side.

Check that the nuts and washers are correctly secured with the suspension bracket retainers and fit the brackets onto their nuts and washers on the other side.

Bear in mind the position of the side for pipe connection before lifting the indoor unit.

CAUTION

Do not move the air louver by hand. The drive mechanism may be damaged.

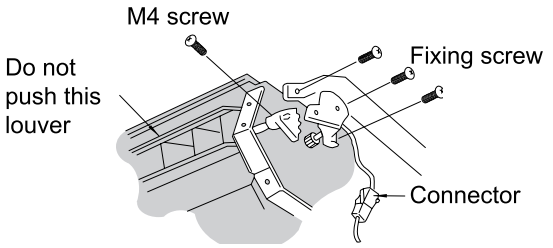

Suspended unit installation

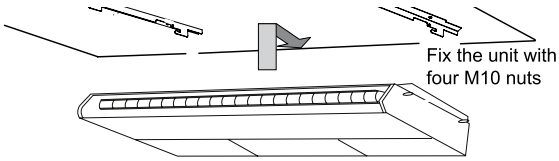

CAUTION

- ***Before lifting the unit, prepare any necessary means (ladders, scaffolding, elevator platform, etc.) and check that the current safety regulations in the place where the installation is taking place are met.***
- ***Check that the lifting work can be carried out without the risk of injuries to you or others in the surrounding area***
- ***Request the assistance of another person to lift the unit.***

Hang the indoor unit on the suspension brackets, inserting the unit assembly bolts on the notches in the brackets.

Fit the nuts, flat washers and spring washers supplied to secure the indoor unit.

Partially built-in unit installation

Where a false ceiling is already installed, install and prepare the pipes and cables on the indoor unit before lifting it.

Cut the area of the unit in the false ceiling and reinforce the opening made.

CAUTION

- ***Before lifting the unit, prepare any necessary means (ladders, scaffolding, elevator platform, etc.) and check that the current safety regulations in the place where the installation is taking place are met.***
- ***Check that the lifting work can be carried out without the risk of injuries to you or others in the surrounding area***
- ***Request the assistance of another person to lift the unit.***

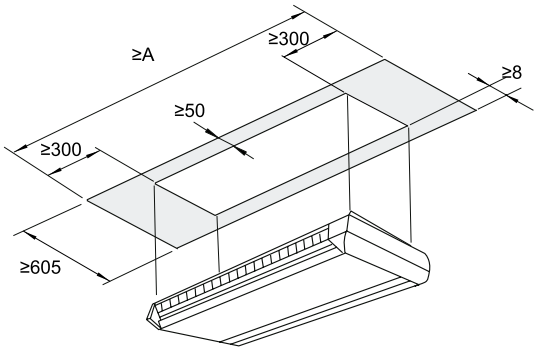

Hang the indoor unit on the suspension brackets, inserting the unit assembly bolts on the notches in the brackets.

Fit the nuts, flat washers and spring washers supplied to secure the indoor unit.

Insulate the top of the unit that will be hidden in the ceiling. Gaps may cause air leaks or condensation.

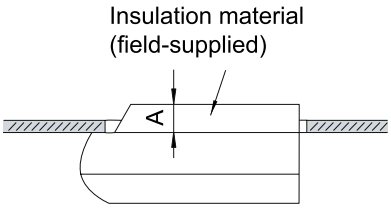

Fit the false ceiling panels along the unit.

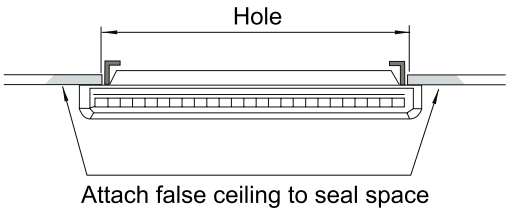

Continue for all installation types

Check that the condensate discharge system in the indoor unit works correctly. To do so, check the level of the drain pan using a spirit level or a clear flexible pipe full of water. The rear of the unit where the drain hose is located must be around 3 mm lower than the front side.

Secure the drain hose with the clamp and adhesive supplied.

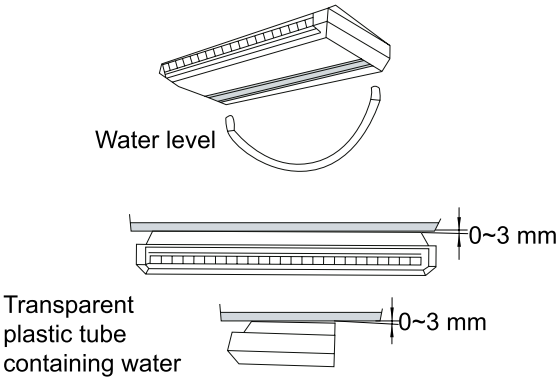

2.5 RPI(M) - Ducted indoor unit (0.8-6.0)FSN(2/3)E(-DU)

2.5.1 Accessories supplied with the unit

Check that the following accessories are supplied with the unit.

NOTE

Please contact your HITACHI distributor if any of the accessories has not been supplied with the unit.

Accessory	Appearance	Quantity	Purpose
Wire clamp		1	For the drain hose connection.

2.5.2 Unit installation

Initial checks

Check that there is enough space around the unit. Consult the corresponding chapter of the Technical Manual for information on the unit measurements.

RPI - Ducted indoor unit (0.8-1.5)FSN2E

1. Rear.
2. Unit inspection and maintenance access.
3. Front side.

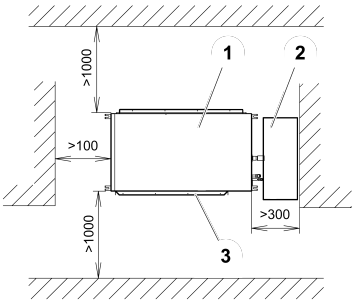

RPI - Ducted indoor unit (2.0-6.0)FSN3E

1. Rear.
2. Unit inspection and maintenance access.
3. Front side.

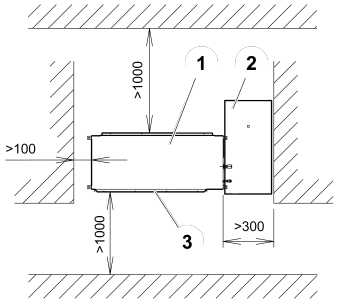

RPIM - Ducted indoor unit (0.8-1.5)FSN2E(-DU)

1. Rear.
2. Unit inspection and maintenance access.
3. Front side.

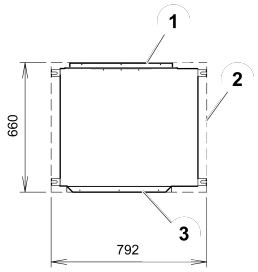

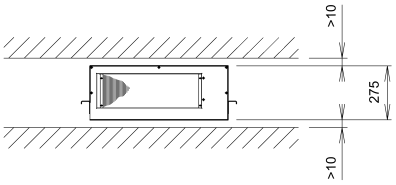

Before starting installation, plan the direction of the pipes and wiring required. Also bear in mind that there must be enough space around the unit for installation and maintenance.

Check that the ceiling surface where the unit is to be installed is completely horizontal.

Check that the drain hose can be installed maintaining the necessary down-slope.

Installation

Install the M10 (3/8) suspension bolts depending on the type of surface:

Concrete beams

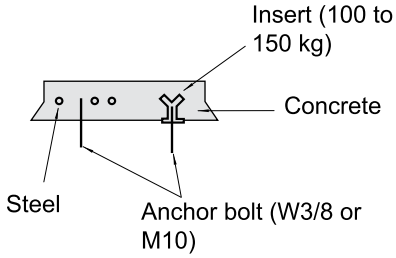

Steel beams

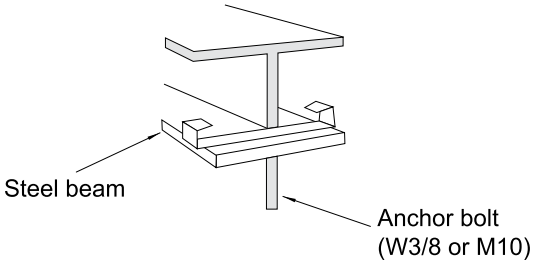

Wooden beams

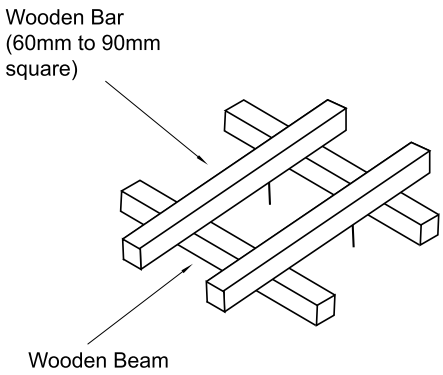

1 Suspension bolt
2 Suspension bracket
3 Left side
4 Inlet air
5 Washer
6 Nut
7 Right side

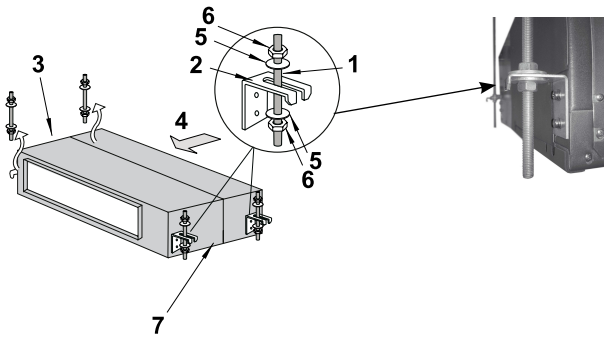

Thread on the nuts and fit the washers for all the bolts, as shown in the figure.

Fit two suspension brackets onto the nut and washer of each bolt, starting on one side.

Check that the nuts and washers are correctly secured with the suspension bracket retainers and fit the brackets onto their nuts and washers on the other side.

Bear in mind the position of the side for pipe connection before lifting the indoor unit.

CAUTION

- ***Before lifting the unit, prepare any necessary means (ladders, scaffolding, elevator platform, etc.) and check that the current safety regulations in the place where the installation is taking place are met.***
- ***Check that the lifting work can be carried out without the risk of injuries to you or others in the surrounding area.***
- ***Request the assistance of another person to lift the unit.***

Lift the unit carefully.

Fit the nuts, flat washers and spring washers supplied (4 of each) to secure the indoor unit.

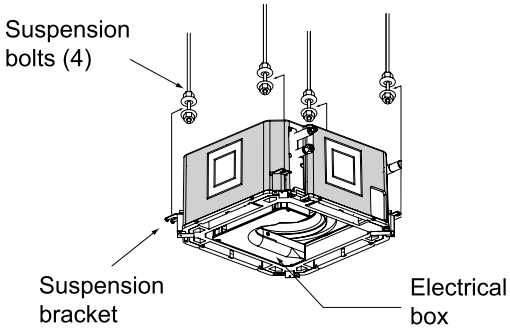

Check that the condensate discharge system in the indoor unit works correctly. To do so, check the level of the drain pan using a spirit level or a clear flexible pipe full of water. The side of the unit on which the drain hose is located must be around 5 mm lower than the front side.

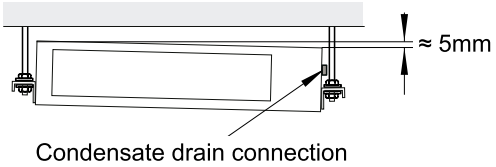

NOTE

The drainage connection on the RPIM unit is located at the rear.

Once adjusted, tighten the suspension bracket nuts.

Apply a thread-locking product to the bolts and nuts to prevent them from loosening. Otherwise, abnormal noise may be caused by mechanical vibrations and the indoor unit may become loose.

Apply protective paint to the bolts and nuts to prevent rusting.

Secure the drain hose with the clamp and adhesive supplied.

CAUTION

Completely cover the unit with a sheet of plastic to protect it during installation work.

2.5.3 Air duct connection

NOTE

- ***Use field-supplied flexible ducts to avoid abnormal acoustic vibrations.***
- ***RPI units are supplied with a standard air filter on the suction side. This filter is supplied for cases where no suction duct is applied (or when the duct is very short).***

Secure the flexible air duct to the outsides of the hoses supplied with the unit.

1 Inlet air

2 Outlet air

3 Standard air filter (factory-supplied)

4 Optional air filter (Field-supplied or adapted factory-supplied one)

5 Insulated duct (Installed on the outer side of the flanges)

6 Flexible duct installation (Rubber or textil material)

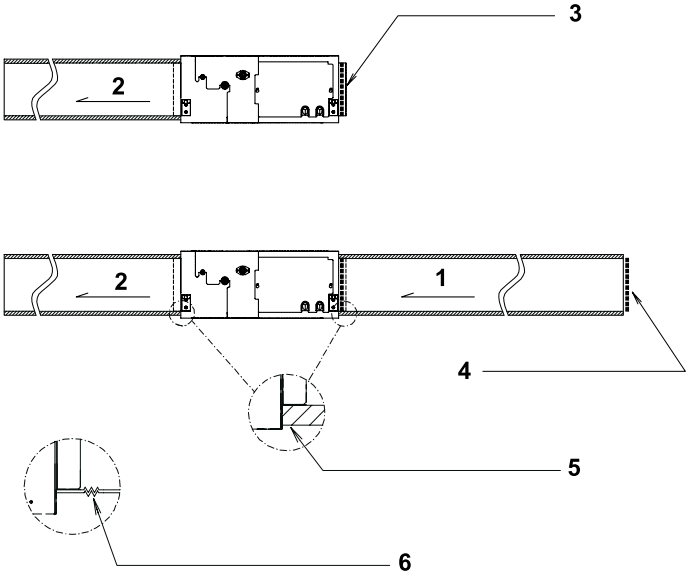

Bear in mind the following instructions depending on the installation type:

1 Where the suction duct is not used, keep the standard air filter.

2 Where the suction duct is used, fit the air filter at the suction duct inlet point, removing the standard air filter from the unit. This air filter must be field-supplied or a factory-adapted one must be used.

3 In the case of the RPIM unit, low static pressure is produced in the suction duct and, therefore, a short duct must be used.

2.5.4 Maintenance of the suction air filter

Simply remove the set screws from the bar -1- (RPIM units: 2 screws, RPI units: 3 screws) and remove it to pull the filter downwards.

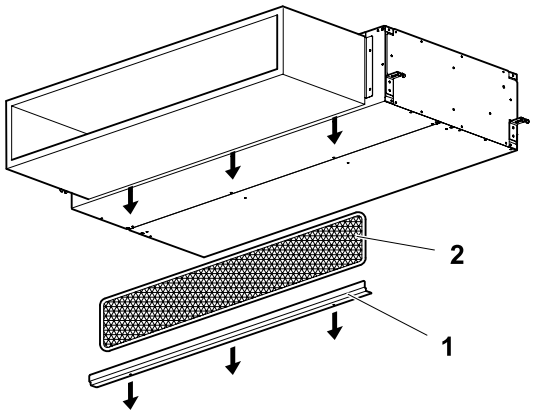

2.5.5 Change in the air suction direction

RPI-(2.0-6.0)FSN3E

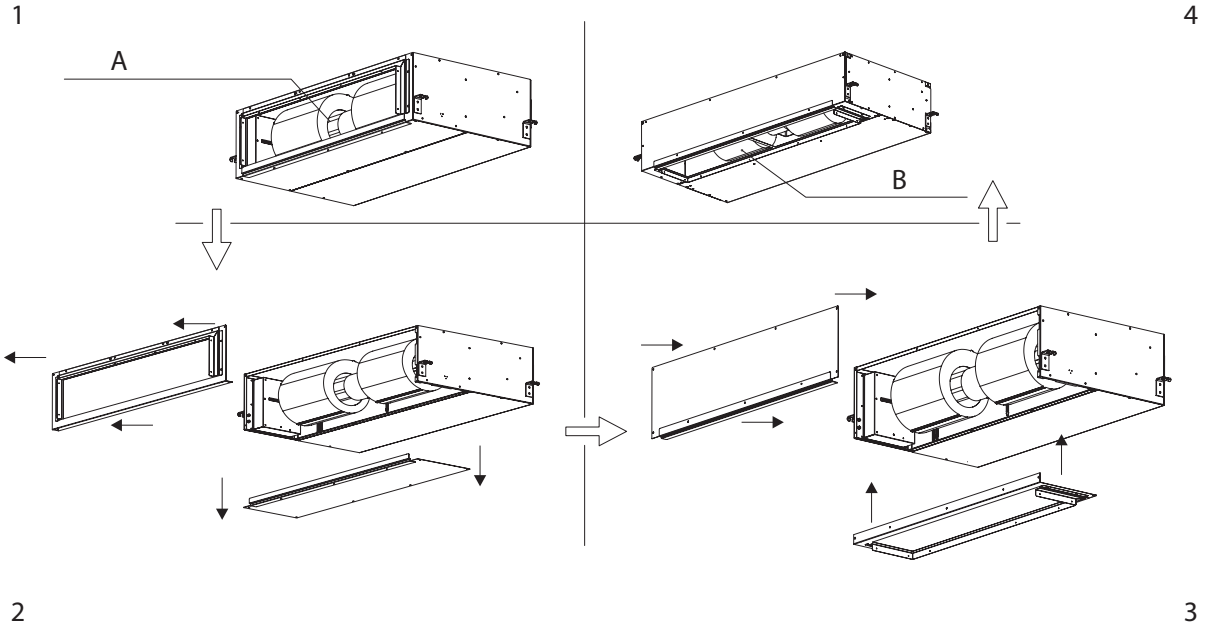

Change in position of the air inlet on RPI-(2.0-6.0)FSN3E models: the position of the air inlet and, therefore, its direction can be modified by changing the position of the rear cover, as shown in the illustrations.

1 Initial position -A- of the air inlet (factory-supplied).
2 Air inlet and bottom cover away from the unit.
3 Interchange air inlet and cover position.
4 Final position -B- of the air inlet.

Equipped with a drain pump to force condensates up to 850 mm in height in relation to the unit. The pump is automatically enabled when the accumulated water level is too high.

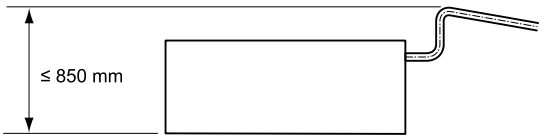

RPIM-(0.8-1.5)FSN2E (-DU)

Change in position of the air inlet on RPIM-(0.8-1.5)FSN2E(-DU) models: the position of the air inlet and, therefore, its direction can be modified by changing the position of the rear cover, as shown in the illustrations.

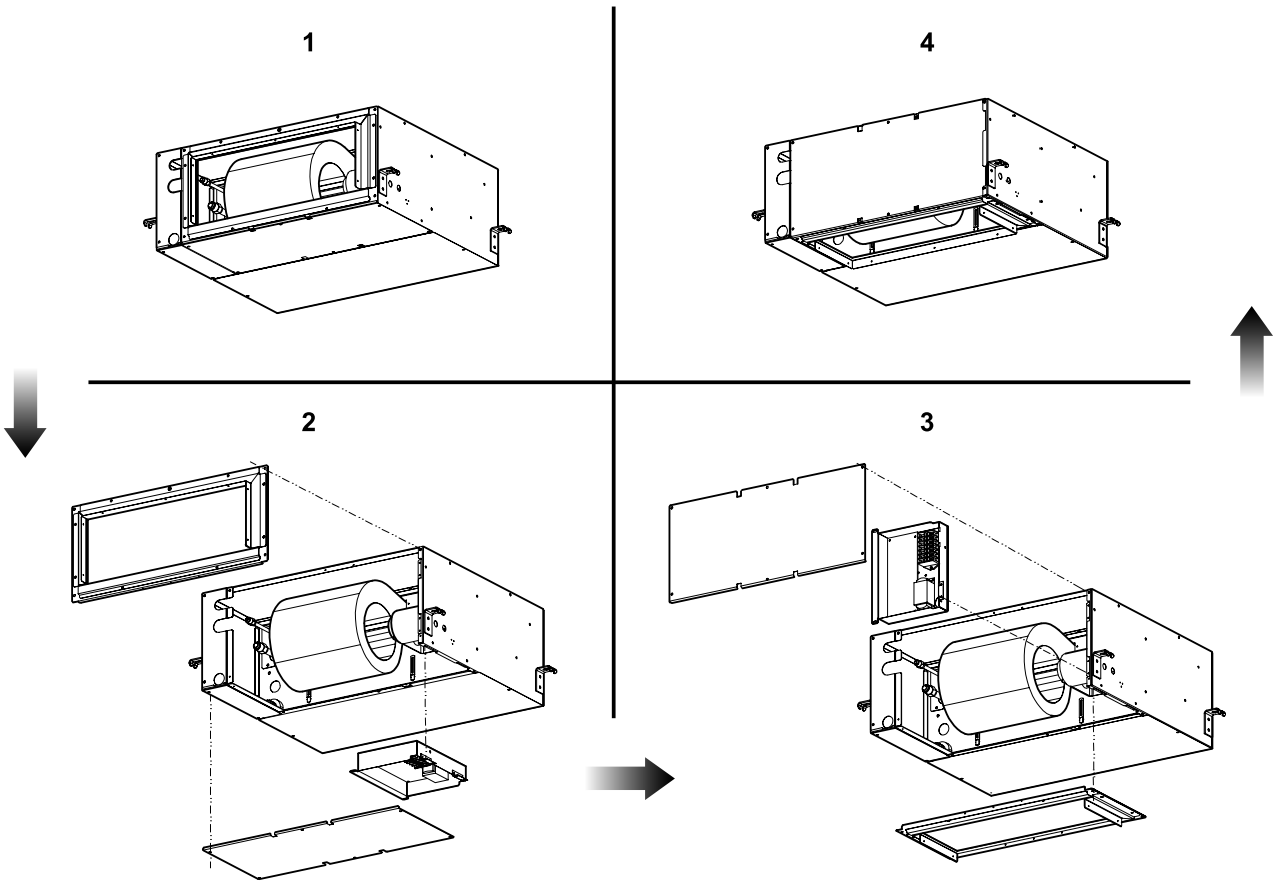

1. Initial position of the air inlet (factory-supplied).
2. Remove the front and rear covers and the electrical box from the unit.
3. Switch the position of the front and rear covers. Change the position of the electrical box on the unit as indicated in the illustration.
4. Final position of the air inlet.

2.6 RPI - Ducted indoor unit (8-10)FSN3E

2.6.1 Accessories supplied with the unit

Check that the following accessories are supplied with the unit.

NOTE

Please contact your HITACHI distributor if any of the accessories has not been supplied with the unit.

Accessory	Appearance	Quantity	Purpose
Piping adapter (Ø19.05 x Ø25.4) (For 8 HP only)		1	Reducer boss for refrigerant piping on the indoor unit
Piping adapter (Ø22.2 x Ø25.4) (For 10 HP only)			
Piping adapter (Ø9.53 x Ø12.7) (For 10 HP only)			

2.6.2 Unit installation

Initial checks

RPI - Ducted indoor unit (8.0/10.0)FSN3E

1. Rear.
2. Unit inspection and maintenance access.
3. Front side.

Check that there is enough space around the unit. Consult the corresponding chapter of the Technical Catalogue for information on the unit measurements.

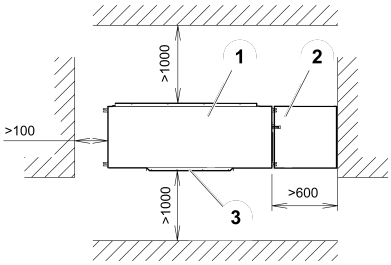

Before starting installation, plan the direction of the pipes and wiring required. Also bear in mind that there must be enough space around the unit for installation and maintenance.

Check that the ceiling surface where the unit is to be installed is completely horizontal.

Check that the drain hose can be installed maintaining the necessary down-slope.

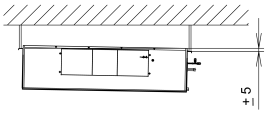

Installation

Install the M10 (3/8) suspension bolts depending on the type of surface:

Concrete beams

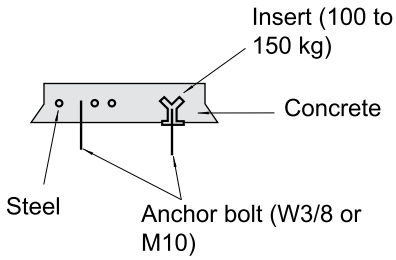

Steel beams

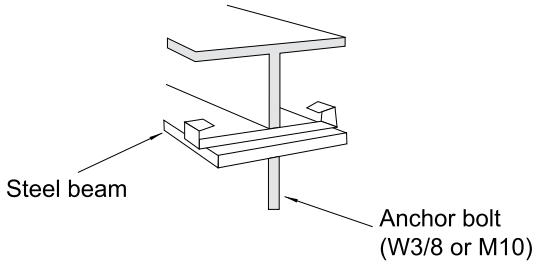

Wooden beams

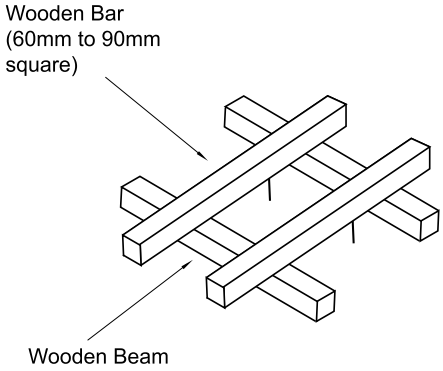

Thread the suspension bracket onto the nut and washer of each bolt, starting on one side.

Check that the nut and washer are correctly secured with the suspension bracket retainers.

Attach the top of the suspension bracket with another nut and washer.

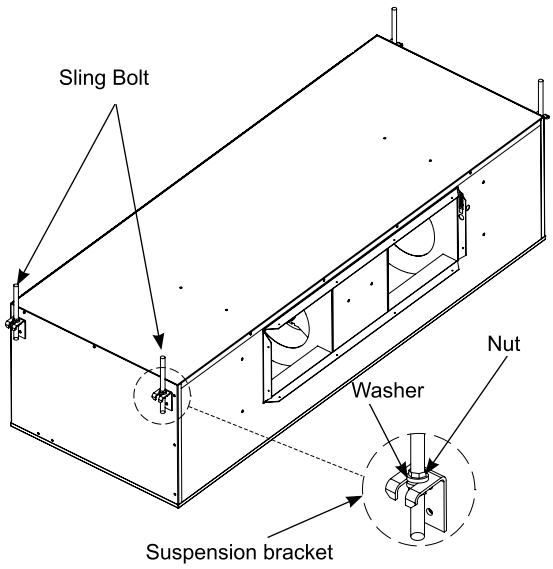

CAUTION

- ***Before lifting the unit, prepare any necessary means (ladders, scaffolding, elevator platform, etc.) and check that the current safety regulations in the place where the installation is taking place are met.***
- ***Check that the lifting work can be carried out without the risk of injuries to you or others in the surrounding area.***
- ***Request the assistance of another person to lift the unit.***

Lift the unit carefully.

Check that the condensate discharge system in the indoor unit works correctly. To do so, check the level of the drain pan using a spirit level or a clear flexible pipe full of water. The side of the unit on which the drain hose is located must be around 5 mm lower than the front side.

Once adjusted, tighten the suspension bracket nuts.

Apply a thread-locking product to the bolts and nuts to prevent them from loosening. Otherwise, abnormal noise may be caused by mechanical vibrations and the indoor unit may become loose.

Apply protective paint to the bolts and nuts to prevent rusting.

Secure the drain hose with the clamp and adhesive supplied.

CAUTION

Completely cover the unit with a sheet of plastic to protect it during installation work.

2.6.3 Air duct connection

NOTE

- ***Use field-supplied flexible ducts to avoid abnormal acoustic vibrations.***
- ***RPI units are supplied with a standard air filter on the suction side. This filter is supplied for cases where no suction duct is applied (or when the duct is very short).***

Secure the flexible air duct to the outsides of the hoses supplied with the unit.

Bear in mind the following instructions depending on the installation type:

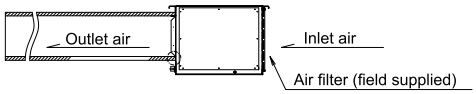

1 Where the suction duct is not used, keep the standard air filter.
2 Where the suction duct is used, fit the air filter at the suction duct inlet point, removing the standard air filter from the unit. This air filter must be field-supplied or a factory-adapted one must be used.

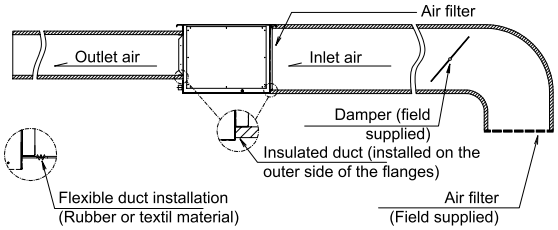

2.6.4 Maintenance of the suction air filter

Simply remove the set screws from the bar -1- (RPIM units: 2 screws, RPI units: 3 screws) and remove it to pull the filter downwards.

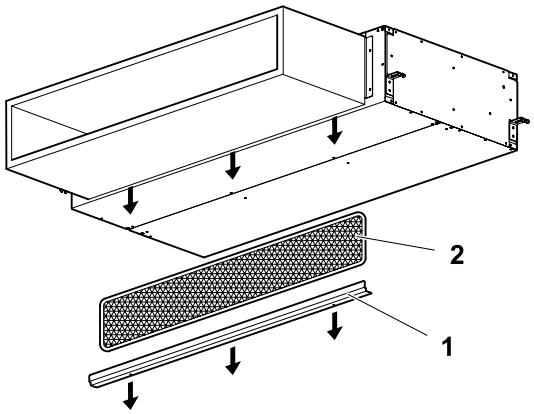

2.7 RPK - FSN2M Wall mounted

2.7.1 Accessories supplied with the unit

Check that the following accessories are supplied with the unit.

NOTE

Please contact your HITACHI distributor if any of the accessories has not been supplied with the unit.

Accessory	Appearance	Quantity		Purpose
		(1.5-2.0)	(2.5-4.0)	
Mounting bracket	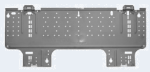	1	1	For unit suspension.
Philips head screw Ø4.1 x 25 mm		6	8	For bracket suspension.
Philips head screw Ø4.1 x 40 mm		2	4	
Insulation piping		1	1	For the refrigerant pipe connection.
Insulation		1	1	
Cable bundle with connector		1	–	Cable for the PC-ART system
Connector		2	–	
Nut		1	1	For pipe installation

2.7.2 Unit installation

Initial checks

Check that there is enough space around the unit. Consult the corresponding chapter of the Technical Manual for information on the unit measurements.

Before starting installation, plan the direction of the pipes and wiring required. Also bear in mind that there must be enough space around the unit for installation and maintenance.

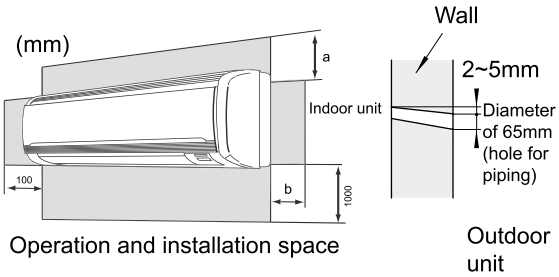

Operation and installation space

NOTE

Bear in mind the air distribution from the unit to the room and select a suitable place for an even air temperature in the room.

Check that the drain hose can be installed maintaining the necessary down-slope.

Installation

CAUTION

- ***Where the mounting bracket must be installed on a wooden or concrete wall, make sure it is resistant enough to withstand a weight of 200 kg.***
- ***Do not fit the mounting bracket to a pillar.***
- ***The place where the indoor unit is to be installed must be a flat surface with enough space to fully house the unit. The weight of the unit must be evenly distributed over the surface.***

RPK-(1.0/1.5)FSN(H)2M

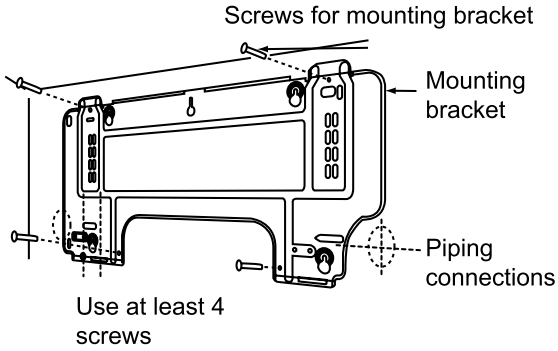

RPK-2.0FSN2M

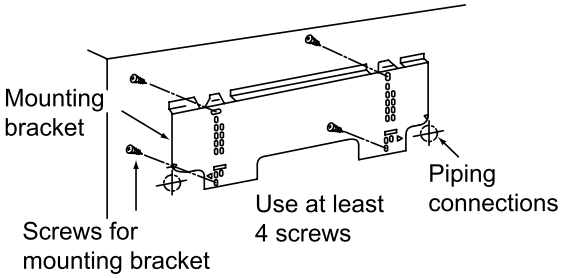

RPK-(2.5-4.0)FSN2M

Check that the mounting bracket is installed so that the drain pipe side is slightly lower (around 3 mm) than the other side for easier condensate discharge.

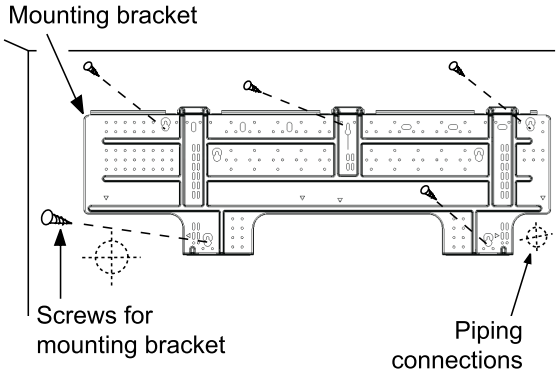

NOTE

The drain hose connection can be made on the right or the left of the unit.

Installation on a concrete wall or a concrete block: fit the mounting bracket to the wall using anchor bolts, as shown in the figure.

Anchor bolt	RPK-(1.0–2.0)FSN(H)2M	RPK-(2.5–4.0)FSN2M
M4-M5	4	5

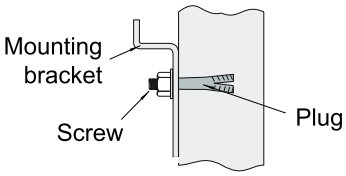

Only for RPK-(1.0-4.0)FSN(H)2M: remove the bottom cover by pressing -1- and -2-.

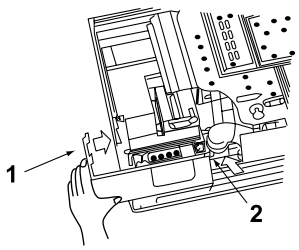

CAUTION

- ***Before lifting the unit, prepare any necessary means (ladders, scaffolding, elevator platform, etc.) and check that the current safety regulations in the place where the installation is taking place are met.***
- ***Check that the lifting work can be carried out without the risk of injuries to you or others in the surrounding area.***
- ***Request the assistance of another person to lift the unit.***

Lift the unit carefully.

Hang the indoor unit on the mounting bracket, keeping it vertical. Secure the bottom cover and the mounting bracket with three screws.

CAUTION

Make sure the unit is hanging correctly on the mounting bracket. Otherwise, the bracket could fall.

RPK-(1.0-4.0)FSN(H)2M:

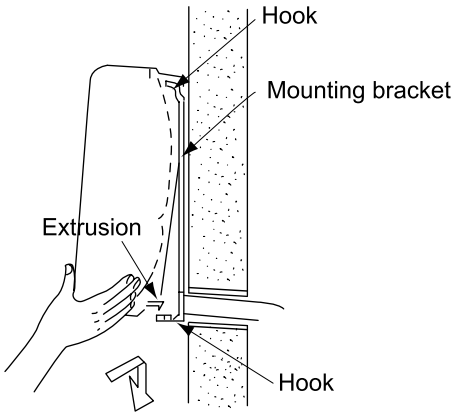

RPK -2.0FSN2M:

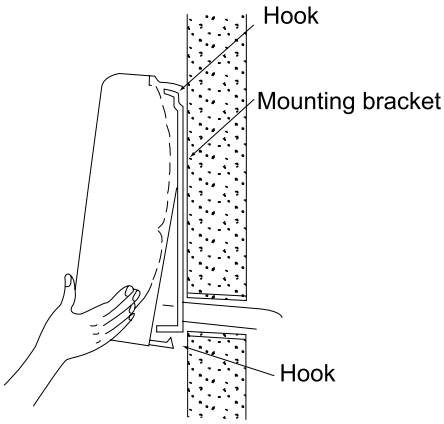

Removal of the front panel (only RPK-(1.0-1.5)FSN(H)2M)

Remove the right side cover to connect the refrigerant pipes and wiring and to check the drainage water flow.

CAUTION

Completely cover the front panel with a sheet of plastic to protect it during installation work.

Open the front panel and remove the two screws.

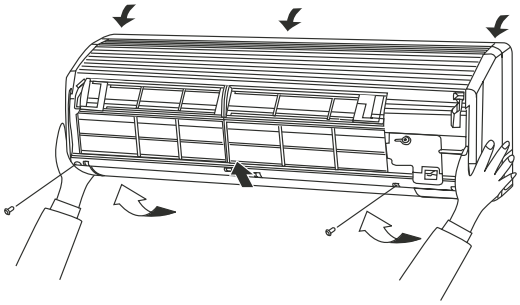

Pull slowly on the bottom of the front panel, making sure the air outlet does not touch the outlet grille. Then lift the panel slightly to release the combined parts (three) from the top of the front panel.

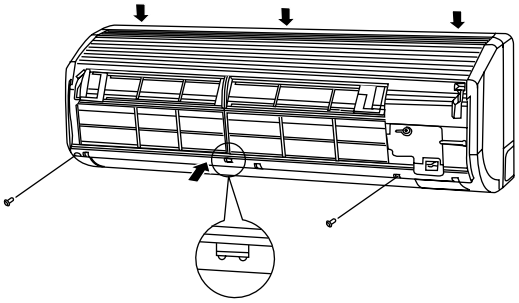

CAUTION

Do not knock the front panel while removing it as this could break the panel casing.

Removal of the front panel (RPK -2.0FSN2M only)

Remove the right side cover to connect the refrigerant pipes and wiring and to check the drainage water flow.

CAUTION

Completely cover the front panel with a sheet of plastic to protect it during installation work.

Remove the three bushings and the screws.

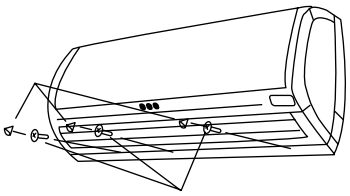

Pull slowly on the bottom of the front panel, making sure the air outlet does not touch the outlet grille.

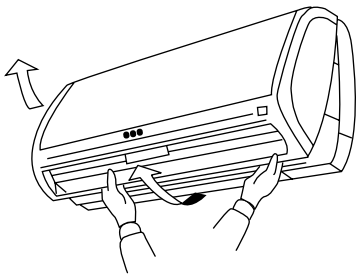

Then lift the panel slightly to release the combined parts (three) from the top of the front panel.

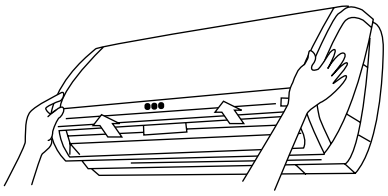

Removal of the front panel (only RPK-(2.5-4.0)FSN2M)

Remove the right side cover to connect the refrigerant pipes and wiring and to check the drainage water flow.

CAUTION

Completely cover the front panel with a sheet of plastic to protect it during installation work.

Remove the three bushings and the screws.

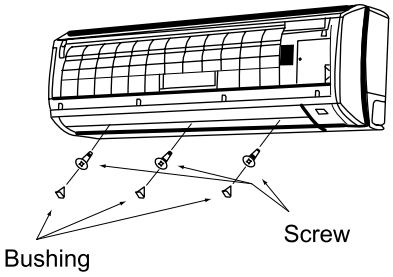

Pull slowly on the bottom of the front panel, making sure the air outlet does not touch the outlet grille.

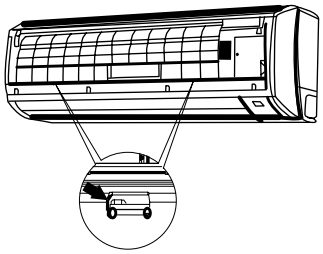

Then lift the panel slightly to release the combined parts (four) from the top of the front panel.

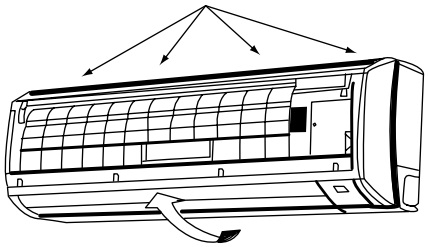

Fitting the front panel

First fit the top of the front panel (three parts). Then secure the hook on the bottom central part.

Check that there are no gaps between the front panel and the unit casing.

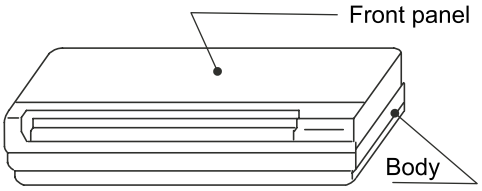

NOTE

There are several spacer stops inside the front panel.

2.7.3 Mounting bracket dimensions

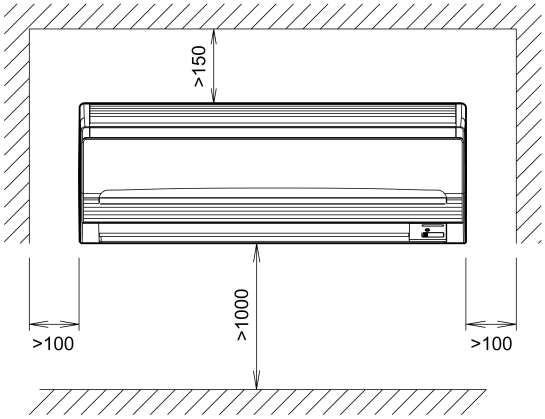

RPK-(1.0/1.5)FSN(H)2M unit suspension bracket

1. Outer contour of the unit.

2. Hole for pipes and connections (depending on the pipe outlet direction).

The RPK-(1.0-1.5)FSN(H)2M models (with the expansion valve on the outside of the unit) may cause refrigerant circulation noise. Install the pipe outlet from the rear right instead of from the rear left wherever possible.

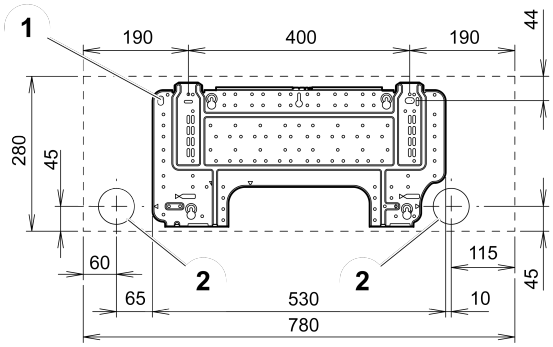

RPK-(2.0)FSN2M unit suspension bracket

1. Outer contour of the unit.

2. Hole for pipes and connections (depending on the pipe outlet direction).

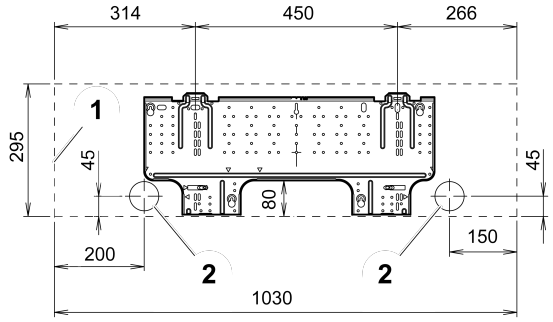

RPK-(2.0-4.0)FSN2M unit suspension bracket

1. Outer contour of the unit.

2. Hole for pipes and connections (depending on the pipe outlet direction).

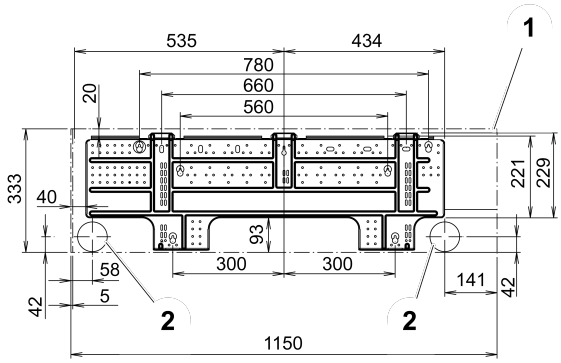

2.8 RPF - Floor type, RPFI - Floor concealed type

2.8.1 Accessories supplied with the unit

Check that the following accessories are supplied with the unit.

NOTE

Please contact your HITACHI distributor if any of the accessories has not been supplied with the unit.

Accessory	Appearance	Quantity	Purpose
Installation adjustment screw		1	To adjust the flat level of the unit.
Philips head screw		2	For PC-ART

2.8.2 Unit installation

Initial checks

Check that there is enough space around the unit. Consult the corresponding chapter of the Technical Catalogue for information on the unit measurements.

RPF - Floor type (1.0-2.5)FSN2E

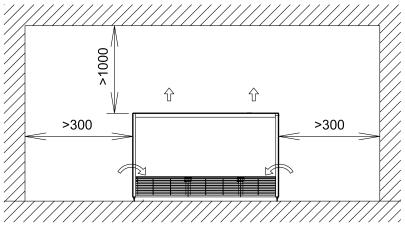

RPFI - Floor concealed type (1.0-2.5)FSN2E

1. Vertical air outlet.

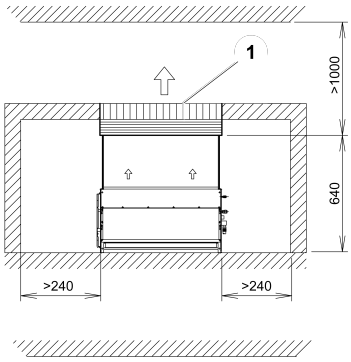

1. Horizontal air outlet.

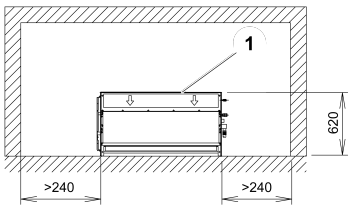

Before starting installation, plan the direction of the pipes and wiring required. Also bear in mind that there must be enough space around the unit for installation and maintenance.

Check that the floor surface where the unit is to be installed is completely horizontal.

NOTE

Bear in mind the air distribution from the unit to the room and select a suitable place for an even air temperature in the room.

Install a service hatch near the pipe connection area and electrical junction box for installation and maintenance work.

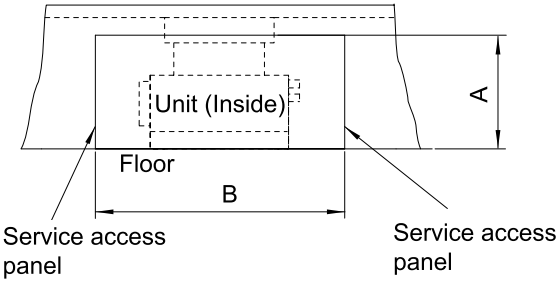

Model	A (mm)		B (mm)	
	RPF	RPFI	RPF	RPFI
RPF(I)-1.5FSN2E	630	620	1479	1359
RPF(I)-2.0FSN2E			1729	1609
RPF(I)-2.5FSN2E				

Check that the drain hose can be installed maintaining the necessary down-slope.

Installation

CAUTION

The place where the indoor unit is to be installed must be a flat surface with enough space to fully house the unit. The weight of the unit must be evenly distributed over the surface.

Handle and position the unit carefully.

Fixing onto floor using wood screws (2-M8) (View from top side)

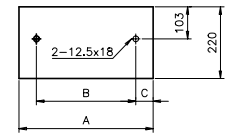

Fixing onto wall (View from front side)

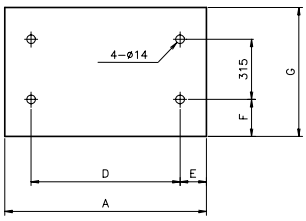

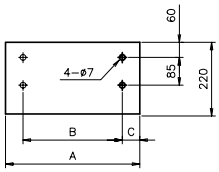

Fixing onto floor using wood screws (4-M5) (View from top side)

Check that the attachment position (in mm) of the unit is as indicated in the figure.

Model	A	B	C	D	E	F	G
RPF-1.5FSN2E	1170	879	217	857	228	140	630
RPFI-1.5FSN2E	988	879	66	857	77	138	620
RPF-2.0FSN2E	1420	1129	11	1107	228	140	630
RPF-2.5FSN2E							
RPFI-2.0FSN2E	1234	1129	11	1107	53	139	620
RPFI-2.5FSN2E							

Adjust the horizontal level of the unit by loosening or tightening the unit installation bolts.

Check that the condensate discharge system in the unit works correctly. To do so, check the level of the drain pan using a spirit level. The side of the unit on which the drain hose is located must be around 3 mm lower than the opposite side.

Secure the base plate and the rear plate of the unit using field-supplied bolts and screws.

NOTE

- ***RPFI units: remove the electrical wiring box when fitting the installation bolts.***
- ***RPF units: carry out the above operation after removing the front and side covers of the unit.***

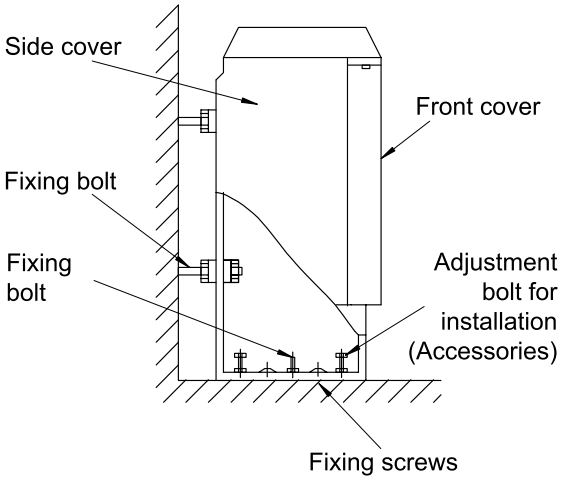

RPFI unit: install the optional air outlet grille as indicated in the figure.

NOTE

- ***Condensation may be accumulated if the unit is installed in a very damp place. Install a porous, water-absorbent plastic plate to absorb and retain water around the grille.***
- ***The optional air outlet grille of the RPFI unit cannot be used in very damp places, such as a kitchen or bathroom, as condensation may settle on its surface.***

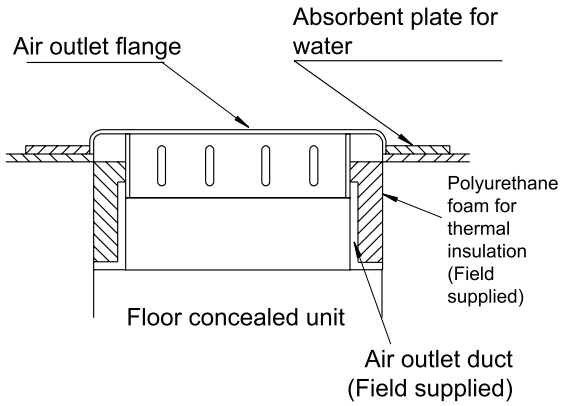

RPFI units: Install an additional access cover attached with screws so as not to touch the fan duct directly.

2.8.3 Change in the air outlet direction (RPFI units)

The air outlet direction of the unit can be modified to adapt it to installation requirements, as shown in the illustration.

1. Lift air outlet -A-.
2. Turn the air outlet on itself until it is opposite its initial position.
3. Tilt the air outlet so that the nozzle is facing forwards.
4. Refit air outlet -A-.

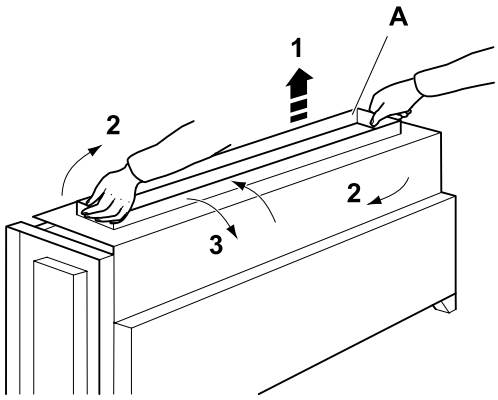

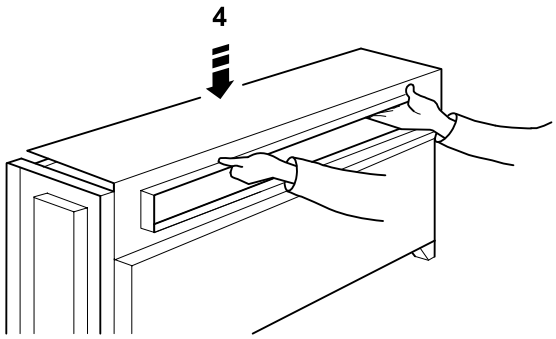

2.8.4 RPF: Optional PC-ART remote control location

It is possible to install the PC-ART remote control below the plastic cover, as shown in the figure.

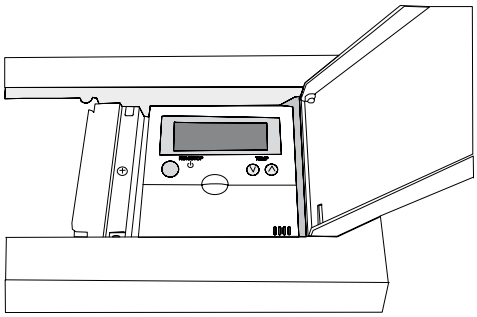

2.9 KPI energy / heat recovery unit

2.9.1 Accessories supplied with the unit

Check that the following accessories are supplied with the unit.

NOTE

Please contact your HITACHI distributor if any of the accessories has not been supplied with the unit.

Accessory	Appearance	Quantity	Purpose
Duct adapter		4	For duct connection.
Set screw (M4 x 8)		24	–
Adapter gasket		4	For hose connection.
Anti-vibration rubber, nut, washer and spring washer		4, 4, 4, 8	For unit installation.

2.9.2 Unit installation

Initial checks

KPI-(252-802)(E/H)2E energy / heat recovery unit

1. Unit inspection and maintenance access.

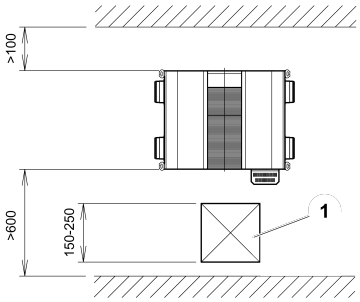

KPI-(1002-2002)(E/H)2E energy / heat recovery unit

1. Unit inspection and maintenance access.

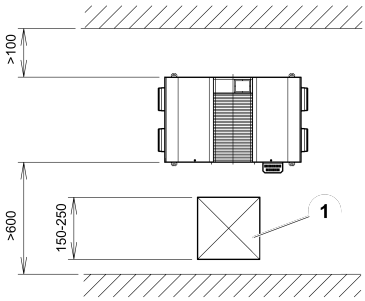

KPI-3002H2E heat recovery unit

1. Unit inspection and maintenance access.

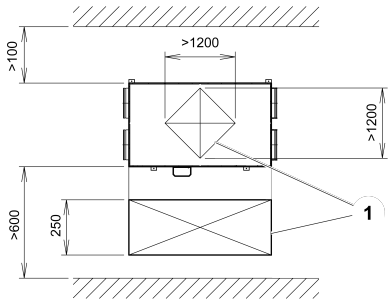

Check that there is enough space around the unit. Consult the corresponding chapter of the Technical Catalogue for information on the unit measurements.

Before starting installation, plan the direction of the pipes and wiring required. Also bear in mind that there must be enough space around the unit for installation and maintenance.

Check that the ceiling surface where the unit is to be installed is completely horizontal.

Installation

Avoid obstacles that could block the air inlet or outlet flow.

Choose a position in which the unit does not take in outdoor air mixed with combustion or exhaust fumes.

The unit must not be covered in snow.

Do not use the unit in the winter when the weather conditions may lead to the formation of condensation in the heat exchanger.

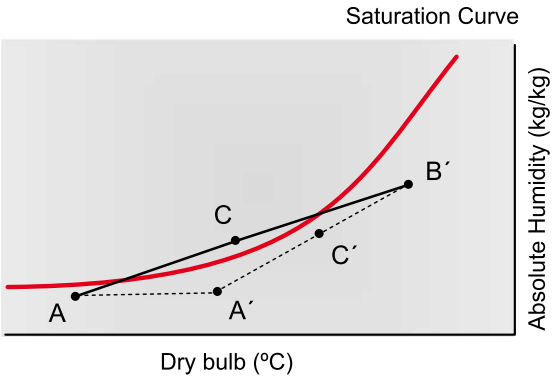

NOTE

- ***The formation of condensation arises if the line connecting the outdoor and indoor temperature points and the conditions of humidity cross the saturation curve in the psychrometric chart.***
- ***Raising the temperature at point A (outdoor air) to point A' gives improved conditions in which the line connecting the outdoor and indoor temperature points and the conditions of humidity do not cross the saturation curve. In this case, the total heat exchanger can be used.***

The limit for ambient conditions in which the total heat exchanger is used is shown in the table below as an example, at an outdoor air temperature of 0 °C, -5 °C and -10 °C and an indoor air temperature of 30 °C. Where the indoor or outdoor air humidity is higher, condensation may accumulate and flow outside the unit.

The method for raising the temperature of A (outdoor temperature) must be determined according to current law in the place where the unit is installed.

Outdoor air temperature	Indoor air temperature	Indoor air relative humidity	Indoor air absolute humidity
(Dry bulb)	(Dry bulb)	%	(kg/kg)
0 °C	30 °C	47	0.0125
-5 °C	30 °C	41	0.0105
-10 °C	30 °C	34	0.0090

Prepare the sling bolts.

Fit the anchor bolts on the suspension bracket and adjust to ensure the unit is installed horizontally.

Thread on the nuts and fit the washers for all the bolts, as shown in the figure.

Fit two suspension brackets onto the nut and washer of each bolt, starting on one side.

Check that the nuts and washers are correctly secured with the suspension bracket retainers and fit the brackets onto their nuts and washers on the other side.

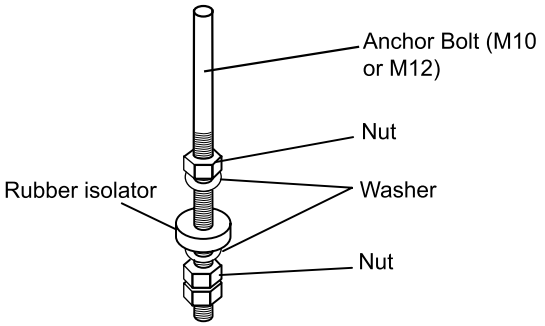

CAUTION

The unit control box is fragile. Do not apply force to the control box.

Where the sling bolts are too short, fit the suspension bracket in an alternative position.

1 Remove the bolts from the upper installation position.

2 Remove the suspension brackets and fit in a higher installation position.

3 Tighten the bolts in the holes from which the suspension brackets have been removed to avoid air leaks.

CAUTION

- ***Before lifting the unit, prepare any necessary means (ladders, scaffolding, elevator platform, etc.) and check that the current safety regulations in the place where the installation is taking place are met.***
- ***Check that the lifting work can be carried out without the risk of injuries to you or others in the surrounding area.***
- ***Request the assistance of another person to lift the unit.***

Lift the unit carefully.

Check that the condensate discharge system in the unit works correctly. To do so, check the level of the drain pan using a spirit level or a clear flexible pipe full of water. The side of the unit on which the drain hose is located must be around 5 mm lower than the opposite side.

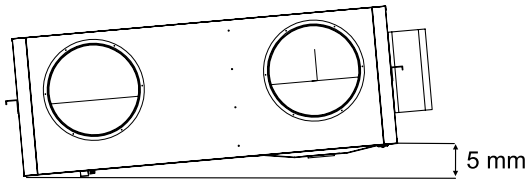

Apply a thread-locking product to the bolts and nuts to prevent them from loosening. Otherwise, abnormal noise may be caused by mechanical vibrations and the indoor unit may become loose.

Apply protective paint to the bolts and nuts to prevent rusting.

CAUTION

Completely cover the unit with a sheet of plastic to protect it during installation work.

2.9.3 Duct connection

NOTE

- ***Use field-supplied flexible ducts to avoid abnormal acoustic vibrations.***
- ***The unit is fitted with a pre-drilled hose to connect the supply duct.***

Check that there is no dust, sawdust or other foreign particles inside the ducts before connecting them.

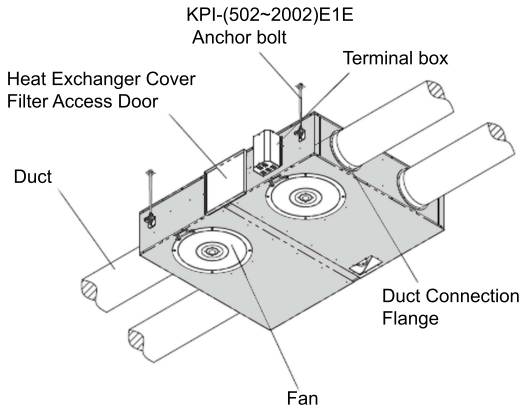

CAUTION

When connecting the ducts, do not touch the damper plate located behind the main unit.

Position and secure the ducts in the connection hoses and apply aluminium tape (field-supplied) around the connection to avoid air leaks. The duct connection hoses have a previously installed sealing system.

Suspend the ducts from the ceiling so that the weight does not rest on the unit.

Cover the two outdoor ducts with suitable heat insulation material to prevent the formation of condensation.

Secure the flexible air duct to the outsides of the hoses supplied with the unit.

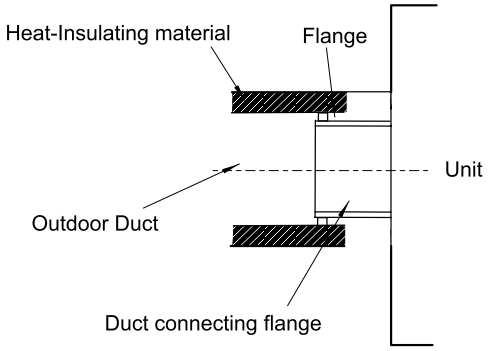

Do not install ducts along complex layouts or sharp bends. The volume of air may be reduced, leading to abnormal circulation noises. Particularly avoid the following situations:

- A: extremely tight bends.
- B: multiple bends.
- C: bends next to the outlet.
- D: extreme reduction of the diameter of the connected ducts.

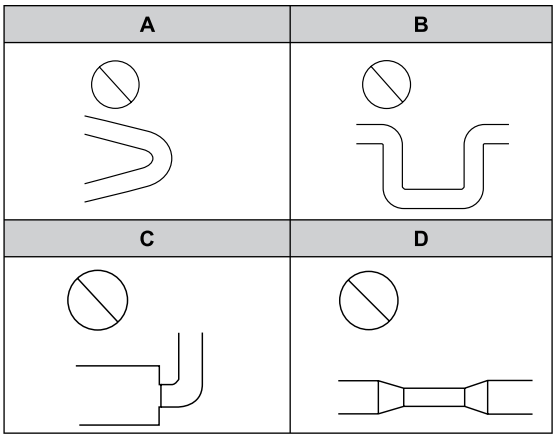

Example of installation:

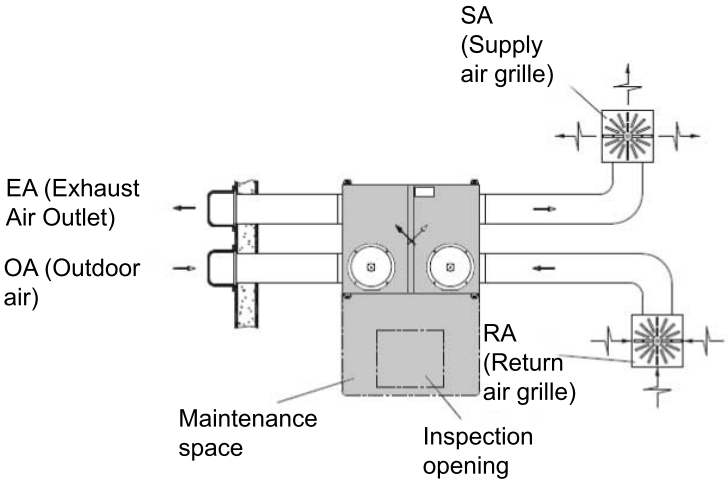

Example of installation:

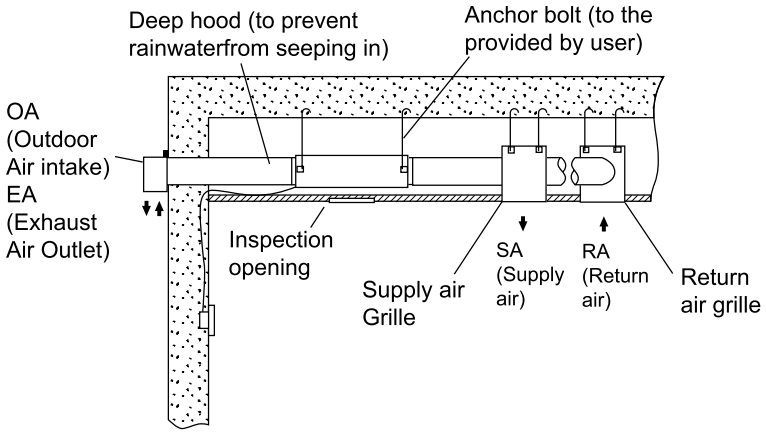

2.10 Econofresh Kit

2.10.1 Accessories supplied with the unit

Check that the following accessories are supplied with the unit.

NOTE

Please contact your HITACHI distributor if any of the accessories has not been supplied with the unit.

Accessory	Appearance	Quantity	Purpose
AS cable	Image not available	1	–
Outdoor thermistor (8 mm)	Image not available	1	–
Screw (for connecting RPI and Econofresh hoses)	Image not available	12	–

2.10.2 Unit installation

Initial checks

See the indoor unit installation and operation manual before installing the Econofresh kit.

1. Air flow direction.

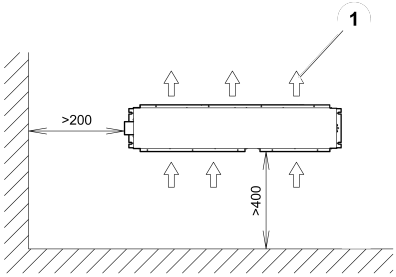

Before starting installation, plan the direction of the pipes and wiring required. Also bear in mind that there must be enough space around the unit for installation and maintenance.

Check that the ceiling surface where the unit is to be installed is completely horizontal.

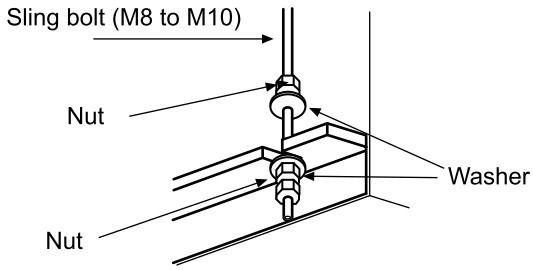

Installation

Avoid obstacles that could block the air inlet or outlet flow.

Prepare the sling bolts.

Thread on the nuts and fit the washers for all the bolts, as shown in the figure.

Fit two suspension brackets onto the nut and washer of each bolt, starting on one side.

Check that the nuts and washers are correctly secured with the suspension bracket retainers and fit the brackets onto their nuts and washers on the other side.

CAUTION

- ***Before lifting the unit, prepare any necessary means (ladders, scaffolding, elevator platform, etc.) and check that the current safety regulations in the place where the installation is taking place are met.***
- ***Check that the lifting work can be carried out without the risk of injuries to you or others in the surrounding area.***
- ***Request the assistance of another person to lift the unit.***

Lift the unit carefully.

CAUTION

The unit control box is fragile. Do not apply force to the control box.

A: KPI unit.

B: suspension bolt.

C: rubber insulation.

D: washer.

E: lock nut.

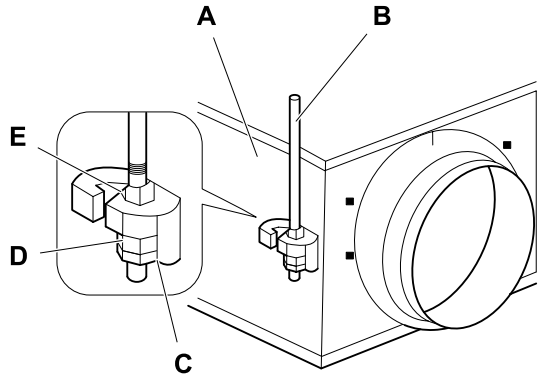

Apply a thread-locking product to the bolts and nuts to prevent them from loosening. Otherwise, abnormal noise may be caused by mechanical vibrations and the indoor unit may become loose.

Apply protective paint to the bolts and nuts to prevent rusting.

CAUTION

Completely cover the unit with a sheet of plastic to protect it during installation work.

2.10.3 Maintenance

Clean the heat exchange unit: at least every two years.

Regularly clean the air filter: at least twice a year.

CAUTION

- ***Completely disconnect the power supply before carrying out maintenance work.***
- ***Wait five minutes after switching off the power supply to the unit before starting any cleaning operations.***
- ***Wear suitable gloves to avoid injuries when handling the unit.***
- ***Do not start the system without the air filter to avoid blockages in the total heat exchanger.***

2.11 DX-Interface

2.11.1 Accesories supplied with the unit

Check that the following accessories are supplied with the unit.

NOTE

Please contact your HITACHI distributor if any of the accessories has not been supplied with the unit.

Accessory	Appearance	Quantity	Purpose
Control box	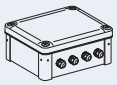	1	System control box
Expansion valve box	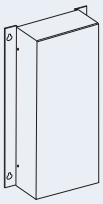	1	Expansion valve for refrigerant cycle control
Thermistor		4	Temperature sensing: inlet air (blue) outlet air (red) gas line (yellow) liquid line (black)
Installation Manual and Declaration of Conformity		1	Instructions and important notice
Control box fixing accessory		4	Control box cover lock

2.11.2 Mounting method

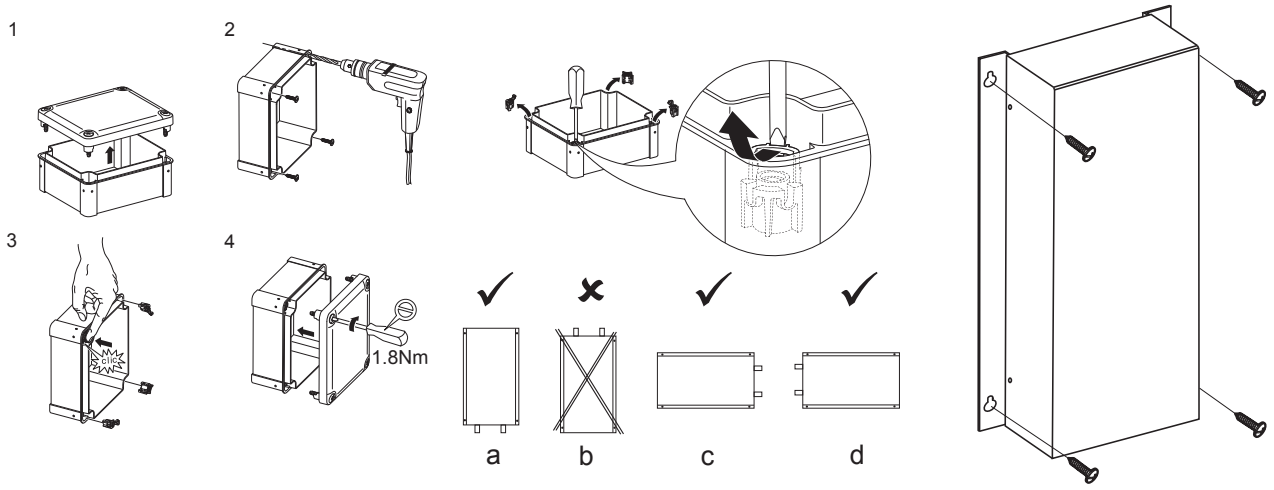

NOTE

In case of installation positions “c” and “d”, make sure to insulate the copper pipes inlet on the expansion valve box cover to avoid any liquid filtration and accumulation.

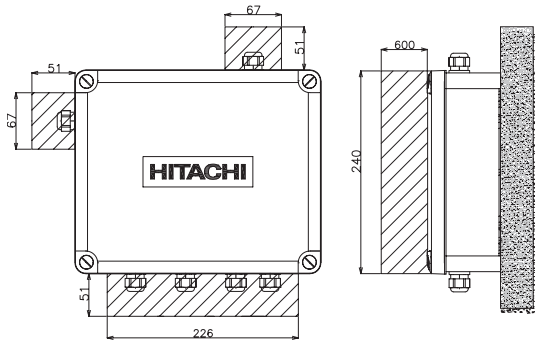

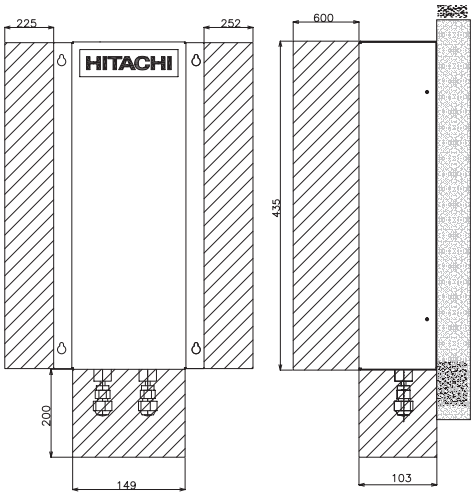

Minimum sizes (mm).

2.11.3 Thermistor installation

◆ Liquid and gas pipes thermistor

Two type thermistors are supplied inside the control box. The purpose and identification of each one is as follow:

Item	PCB socket / Thermistor connector color	PCB socket number	Thermistor length (mm)
Liquid pipe thermistor	Black	THM 3	650
Gas pipe thermistor	Yellow	THM 5	600

CAUTION

In case that the thermistors supplied with the Dx-Interface are not long enough, please make sure that the length extension is properly done avoiding the sensing distortion and that the joint is properly insulated to avoid any electrical failure.

NOTE

When fitting the thermistors, remember that they must be secured correctly by the special clamp, ensuring the perfect contact between the pipe and thermistor. Cover it completely with insulation, like cork tape or pipe insulation, depending on the location. Replace them if damaged during maintenance work.

◆ Thermistor installation example

1	Liquid / gas pipe thermistor (factory supplied)
2	Thermistor holder (field supplied)
3	Thermistor lead wire (field supplied)
4	Insulation (field supplied)

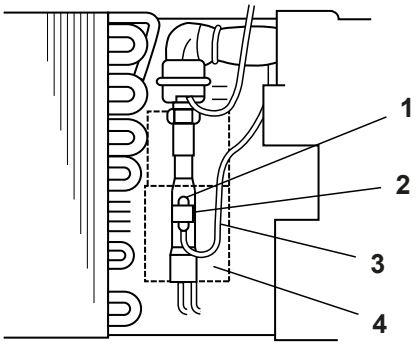

CAUTION

The thermistor must be installed properly in order to avoid water onto the thermistor.

Typical installation location

A	Liquid pipe thermistor	Must be installed in the coldest liquid line point in the heat exchanger (prior the distributor).
B	Gas pipe thermistor	Must be installed as close as possible to the heat exchanger refrigerant outlet.

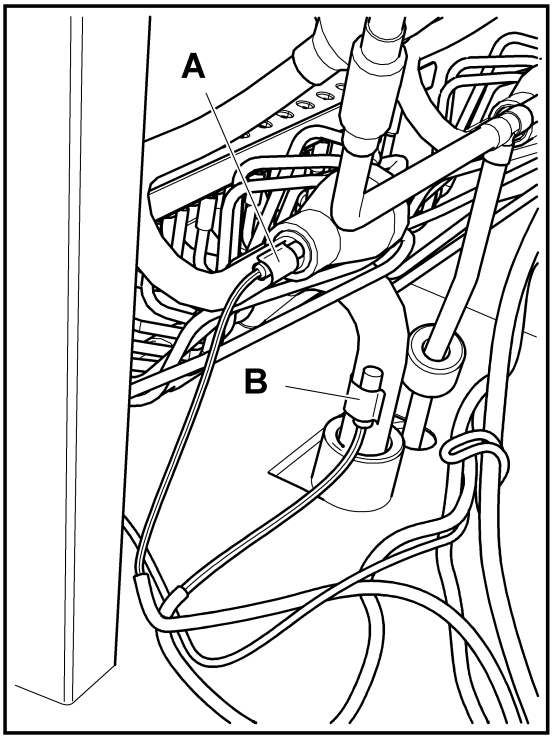

Air thermistor

Two air thermistors are supplied inside the control box. The purpose and identification of each one is as follow:

Item	PCB socket / Thermistor connector color	PCB socket number	Thermistor length (mm)
Inlet air thermistor	Blue	THM 1	1200
Outlet air thermistor	Red	THM 2	1200

CAUTION

In case that the thermistors supplied with the Dx-Interface are not long enough, please make sure that the length extension is properly done avoiding the sensing distortion and that the joint is properly insulated to avoid any electrical failure.

NOTE

When fitting the air thermistor, remember that they must be secure correctly, in an adequate place to avoid external influences, like ambient conditions, and where the air temperature is significant.

◆ Cable clamp example

1	Tie (Field supplied)
2	Cable clamp (Field supplied)
3	Thermistor (supplied)

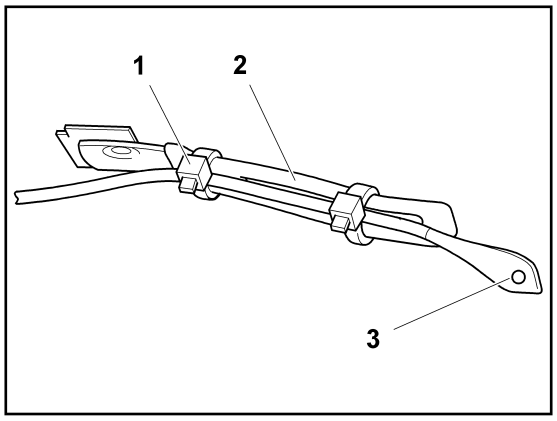

CAUTION

The thermistor must be installed properly in order to avoid water onto the thermistor.

◆ Typical installation

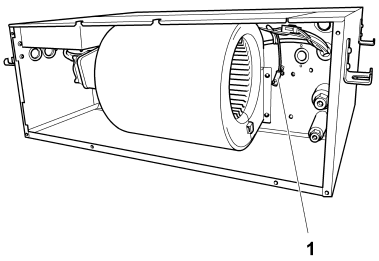

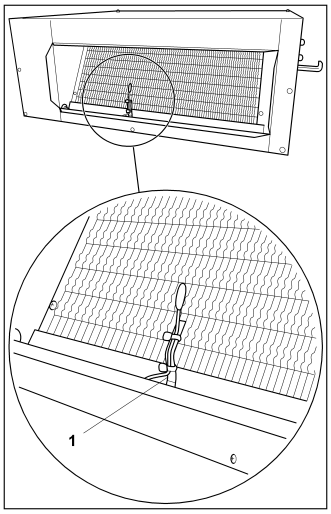

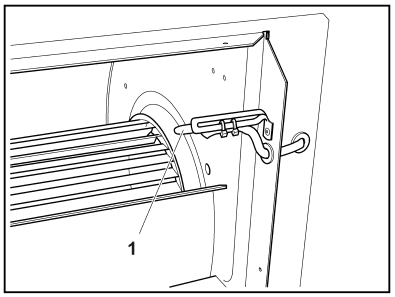

1 Thermistor.

2.12 Optional accessories

2.12.1 Outdoor air inlet

◆ Outdoor air inlet duct connection position (OACI-232 or PD-75)

The inlet of outdoor air is possible through the PD-75 (RCI, RCIM) or the OACI-232 (RCI) duct connection in the position shown in the figure.

OACI-232 (Only RCI)	PD-75 (RCI, RCIM)
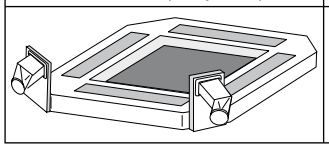	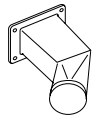

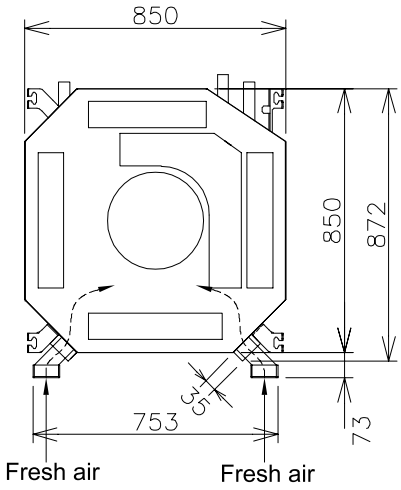

This unit cannot take in outdoor air by itself and must be connected to a duct fitted with a fan and a control damper.

The duct must be controlled to ensure it only works when the unit is running. The figure shows an example of electrical control.

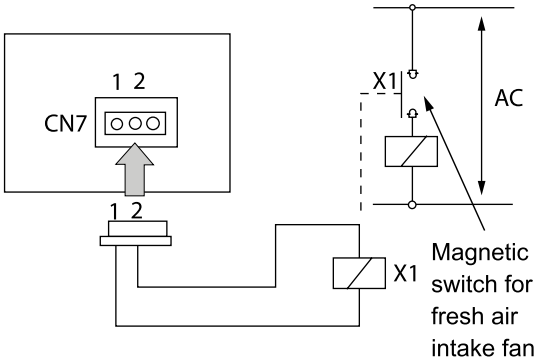

NOTE

- ***The total height of the unit is increased by around 80 mm when the outdoor air inlet duct (OACI-232) is installed. Take this measurement into account when installing the unit.***
- ***Use a cable with a three-terminal connector (PCC-1A) for the CN7 connector on the indoor PCB.***

The maximum amount of incoming outdoor air is 20% of the air flow rate of the indoor unit. If the amount of incoming outdoor air exceeds this value, condensation may be produced on the inner surface of the drain pan (air inlet hole) and, in some cases, dew may form. Always limit yourself to the values indicated in the figure below.

Nº	Part
1	Duct (made of only non-combustible materials)
2	Thermal insulation (non-combustible materials)
3	Outdoor air inlet hood with gallery (attached drip-proof hood type)
4	Air filter
5	Duct fan
6	Service panel
7	Damper

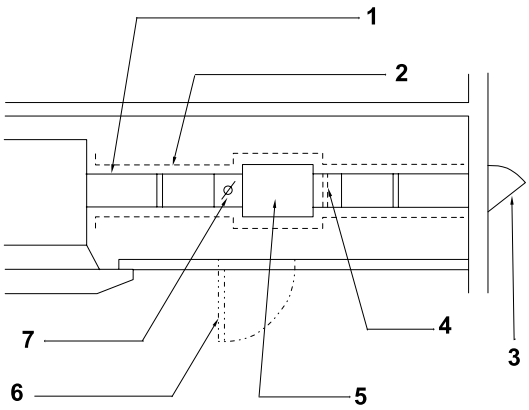

Fit an air filter to the suction side of the outdoor air inlet duct in a position that allows for easy maintenance operations.

Insulate the duct and its connection using fireproof insulating materials only.

NOTE

The parts shown in the above figure will be field-supplied.

Install an inspection panel -6- below the duct fan so that maintenance operations can be carried out on the air filter and the damper.

Always use a damper and adjust the amount of air where a fan with a supply volume higher than the outdoor air inlet volume limit is used.

The outdoor air inlet duct resistance is indicated in the following figure. Use as a guide for fan selection.

(*1): installation of the junction box on one side.

(*2): installation of the junction box on both sides.

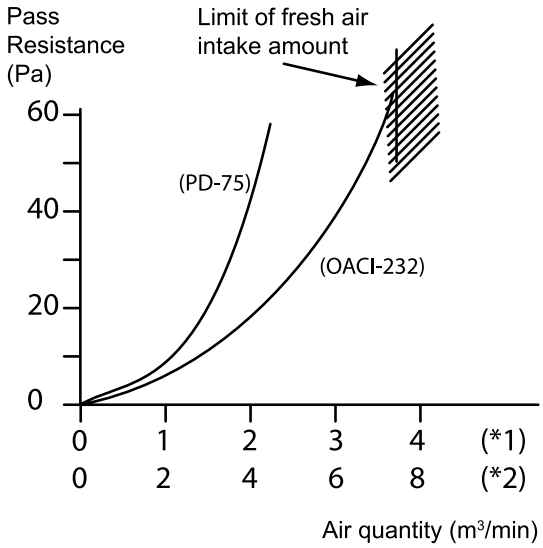

◆ T-duct connection position (TKCI-232)

The T-duct connection is designed for easier connections between the outdoor air inlet and the connection duct.

The T-duct connection can only be installed when using the outdoor air inlet kit (optional) or the filter box (optional).

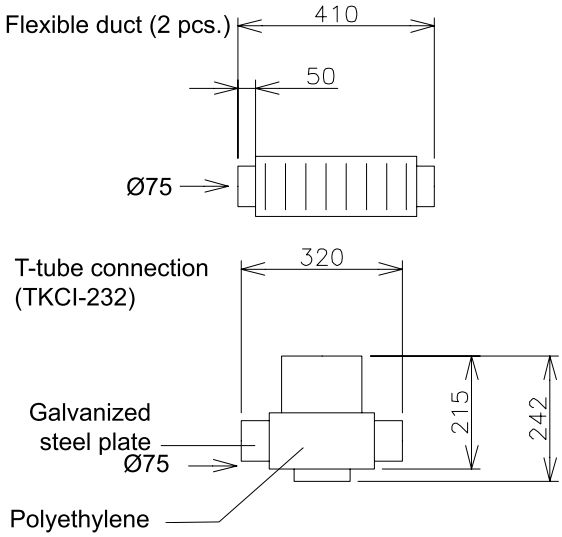

RCI unit with T-duct connection. The diameter of the T has increased (Ø90).

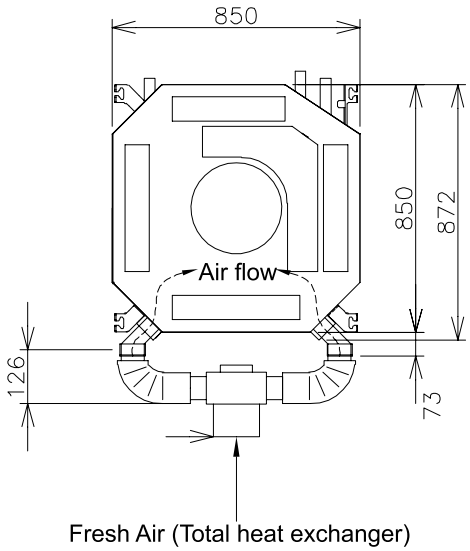

The outdoor air inlet duct resistance increases as indicated in the following figure when using the T-duct connection. Use it as a guide for fan selection.

(*1): installation of the junction box on one side.

(*2): installation of the junction box on both sides.

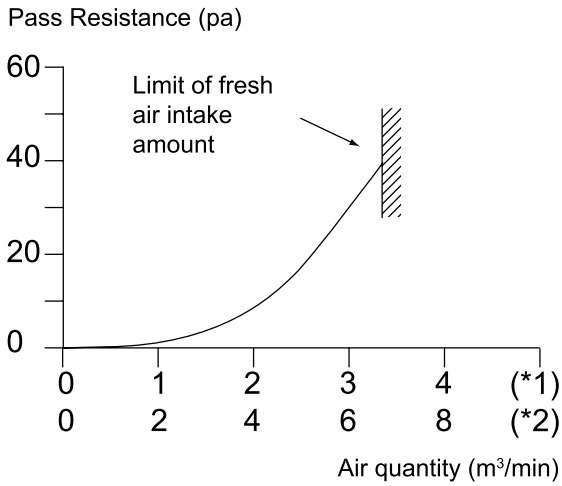

◆ Branch pipe (PDF 23C3, PDF 46C3)

If there are obstacles such as partitions inside the room that prevent the air from circulating correctly, branches can be installed to provide an even air temperature.

Suitable return air grilles must be installed in line with the volume of return air. If air conditioning is provided in an adjoining room, always install a return grille.

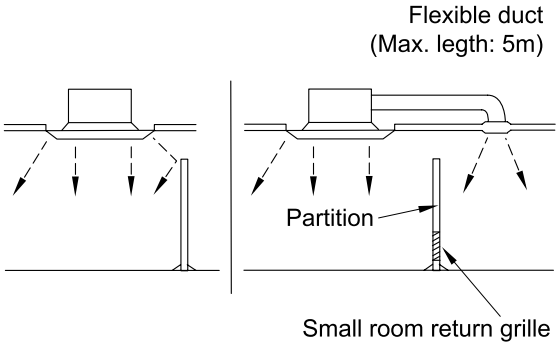

Example of branched duct

Example of a branch pipe.

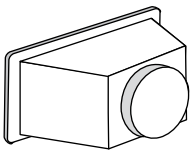

Branch duct flange

Branch pipe installation

The connections for the branch pipe are indicated in the following figure.

There are six knockout holes. Cut the insulation material on the outer surface in a circle and line up the notches at the four corners. Use a screwdriver or similar and remove.

Prepare the square connection duct (field-supplied) or use a flexible duct with a diameter of 150 or 200 mm.

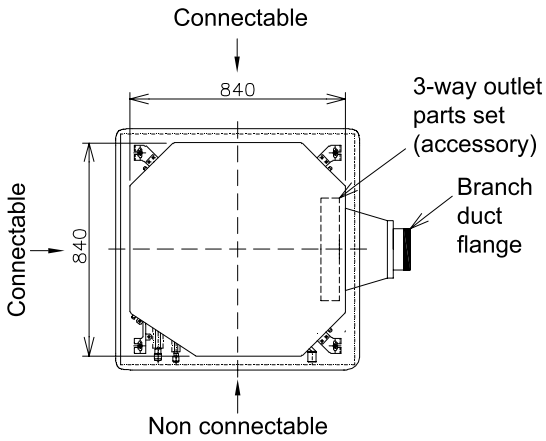

Duct connection dimensions

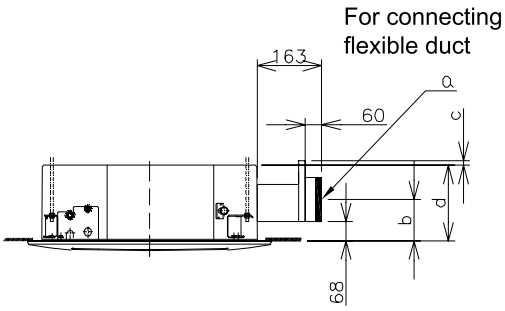

Model	Units	a	b	c	d
PDF-23C3	RCI-(1.5-2.5)FSN3E	150	155	9	248
PDF-46C3	RCI-(3.0-6.0)FSN3E	200	180	6	298

Fit enough insulation to the connection between the pipe and the main body of the indoor unit and to the connection between the duct and the pipe.

Use a set of three-way outlet parts (optional parts) and completely block the air outlet on the branched duct side of the panel (to avoid condensation and direct the air towards the branched duct).

Model	Units	Remarks
PI-23LS5	RCI-(2.0-6.0)FSN3E	To connect to the panel outlet. See *Outdoor air inlet duct connection position (OACI-232 or PD-75), see on page 73*

The quantity of air from the branched duct side is shown in the table below as the air quantity index of the unit. If two branched ducts are connected to the unit, the amount of air from the branched duct side will be greater and the speed of the air on the 3-way outlet side will decrease. Therefore, the hot air projection distance will be reduced.

1. Where the branch duct is installed from this viewpoint, apply the dimensions indicated in the figure below to avoid accidents.
2. Use ducts with non-combustible insulating materials.
3. Fit enough heat insulation to the duct to avoid condensation.
4. Follow the regulations in force regarding this matter in the place of installation or use the dimensions indicated in the figure below if there are no applicable regulations.

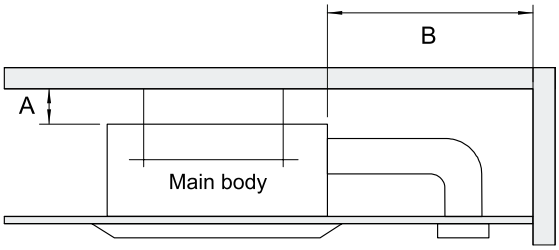

Measurement	Wall and pillar material	
	Combustible materials	Non-combustible materials
A	≥ 100 mm	≥ 50 mm
B	≥ 100 mm	≥ 60 mm

◆ Outlet air flow interlock (PI-23LS5)

If only three outlets are necessary, use the 3-way outlet part set indicated in the table below.

Accessory	Appearance	Quantity	Purpose
PI-23LS5	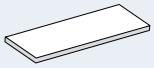	1	RCI-(1.5-6.0)FSN3E

Install the interlock plates as indicated in the figure.

Only one of the 4 outlets can be blocked.

NOTE

If three outlet ways are used, the quantity of air will decrease by between 3% and 5% and there will be no significant differences within the unit working range in comparison with the four-way outlet. However, the operating noise level will increase from 1 to 2 dB.

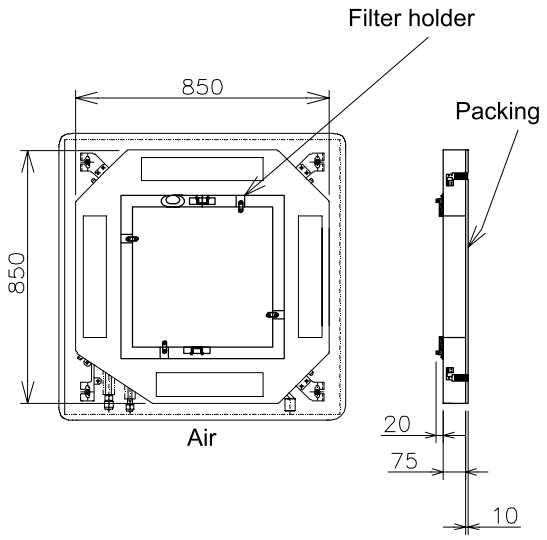

2.12.2 Filters

◆ Filter box (B-23H4)

The dimensions of the filter box are shown in the following figure.

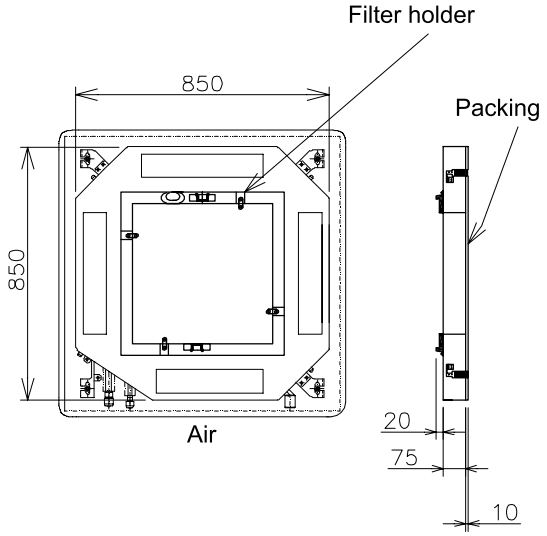

When the filter box is installed, the total height of the unit increases by approximately 85 mm. Therefore, pay attention to the installation space.

Bear in mind that the size before compression is 10 mm, but the size is reduced after compression to 5 mm.

Nº	Part
1	Suction grille
2	Air filter
3	Long-lasting air filter
4	Filter box
5	Ceiling
6	Air panel (optional)
7	Suction grille

Model	a (mm)
RCI-(1.0-2.5)FSN3E	248
RCI-(3.0-6.0)FSN3E	298

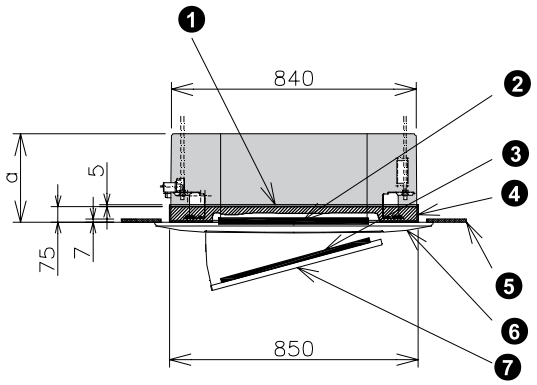

◆ Anti-bacteria filter (F-23L4-K)

The dimensions of the long-lasting anti-bacteria filter are shown in the following figure.

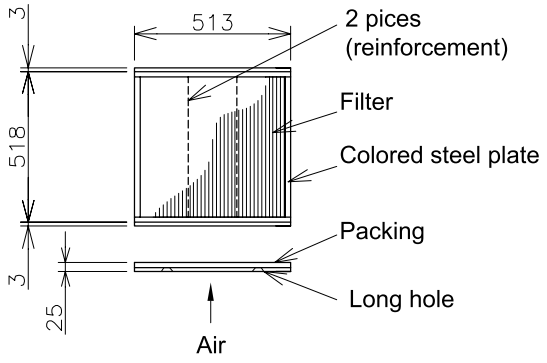

To fit the filter, insert the tab on the suction grille into the large hole in the filter, as shown in the figure below.

Model	a (mm)
RCI-(1.5-2.5)FSN3E	248
RCI-(3.0-6.0)FSN3E	298

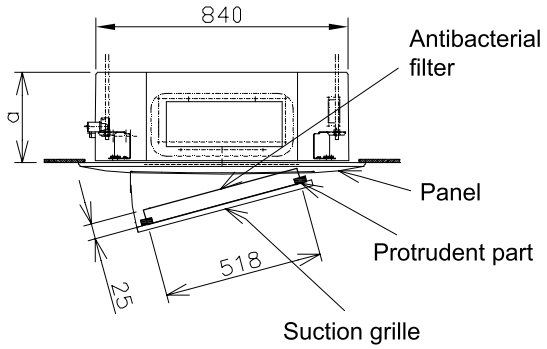

NOTE

When using this filter, set the air flow to high speed using the remote control to maintain the necessary volume of air.

Specifications

Part	RCI-(1.0-6.0)
Dust collection efficiency (%)	50 (gravimetric method)
Air flow rate (m^3/min)	37.0
Initial pressure loss Pa (mmAq)	17.7 (1.8)
Final pressure loss Pa (mmAq)	44.1 (4.5)
Filter/Frame/Packaging colour	White/Brown/-
Working life	4 years (with maintenance every 1250 hours)
Cleaning	Available (*)
Weight (kg)	0.7
Performance	Avoids the multiplication of bacteria and mould
Filter material:	Modified acrylic fibre 1 (containing inorganic anti-bacterial substance)
Support net	Modified acrylic fibre 2 (containing organic anti-bacterial substance)

(*) This is the standard working life of the filter and its duration may vary depending on the conditions of use. Clean the filter with water or neutral detergent.

◆ Deodorising filter (F-23L4-D and F-46L4-D)

The dimensions of the deodorising filter are indicated in the following figure.

Remember that the filter thickness depends on the model.

Model	a (mm)
RCI-(1.5-2.5)FSN3E	26
RCI-(3.0-6.0)FSN3E	42

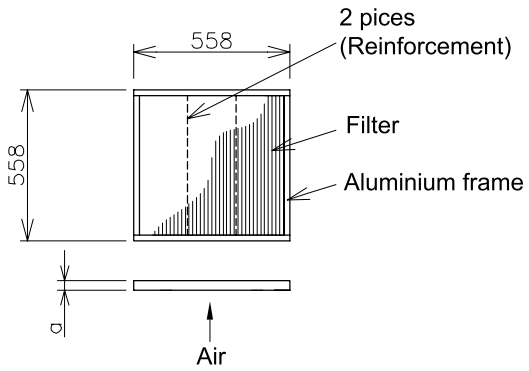

To fit the filter, you must install the filter box *Filter box (B-23H4), see on page 78*.

NOTE

When using this filter, set the air flow to high speed using the remote control to maintain the necessary volume of air.

Specifications

Part	RCI-(1.0-2.5) F-23L4-D	RCI-(3.0-6.0) F46-L4D
Dust collection efficiency (%)	50 (gravimetric method)	
Air flow rate (m^3/min)	20.0	37.0
Initial pressure loss Pa (mmAq)	15.7 (1.6)	16.7 (1.7)
Final pressure loss Pa (mmAq)	42.2 (4.3)	33.3 (3.4)
Working life	3 years (with maintenance every 3-6 months)	
Reuse	Available (dried by sunlight) (*1)	
Cleaning	Available (washed with water) (*2)	
Weight (kg)	0.9	1.0
Dimensions a (mm)	0.9	1.0
Performance	Absorbs smoke, body odour, etc.	
Restrictions of use	Washing with detergents is forbidden	

(*1) This is the standard working life of the filter and its duration may vary depending on the conditions of use. Clean the filter with water or neutral detergent.

(*2) Wash the filter with water or neutral detergent to avoid reducing the absorption capacity.

NOTE

- ***Some special smells (such as that of organic solvents and sulphur gas) cannot be eliminated.***
- ***This filter is reusable. Clean as indicated in the table and allow to dry in the sun.***
- ***This filter can be used with the long-lasting deodorising filter (optional).***
- ***This filter is supplied individually.***

HITACHI
Inspire the Next

3. Piping work and refrigerant charge

Index

3.1 Refrigerant pipe selection 82
3.1.1 Refrigerant pipe selection 82
3.2 Copper pipes, sizes, connection and insulation 83
3.2.1 Copper pipes and sizes 83
3.2.2 Pipe connection 84
3.2.3 Insulation of multikits and/or branches 84
3.3 General instructions on the installation of refrigerant pipes 85
3.4 Copper refrigerant pipe 86
3.4.1 Three principles on work with refrigerant pipes 86
3.4.2 General information on copper refrigeration pipes 86
3.4.3 Diameters of the copper refrigeration pipes 87
3.4.4 Preparing and cutting copper refrigeration pipes 87
3.4.5 Bending copper pipes 89
3.4.6 Brazing copper refrigeration pipes 89
3.4.7 Flared connection mounting 91
3.4.8 Refrigerant pipe insulation 91
3.4.9 Refrigerant pipe suspension 92
3.5 Refrigerant and drain hose installation 93
3.5.1 RCI - 4-way cassette (1.0-6.0)FSN3E 93
3.5.2 RCIM-4-way cassette (compact) (1.0-2.0)FSN2 94
3.5.3 RCD - 2-way cassette (1.0-5.0)FSN2 96
3.5.4 RPC - Ceiling type (2.0-6.0)FSN2E 97
3.5.5 RPI - Ducted indoor unit (0.8-1.5)FSN2E 101
3.5.6 RPI - Ducted indoor unit (2.0-10.0)FSN3E 102
3.5.7 RPIM - Ducted indoor unit (0.8-1.5)FSN2E(-DU) 105
3.5.8 RPK - Wall type (1.0-4.0)FSN(H)2M 107
3.5.9 RPF(I)-Floor type (1.0-2.5)FSN2E 110
3.6 Refrigerant charge 112
3.7 Precautions in the event of refrigerant leaks 113
3.7.1 Maximum permissible concentration of hydrofluorocarbon (HFC) 113
3.7.2 Calculation of the concentration of refrigerant 113
3.7.3 Countermeasures in the event of refrigerant leaks 113

3.1 Refrigerant pipe selection

3.1.1 Refrigerant pipe selection

NOTE

Consult the corresponding Technical Catalogue for outdoor units from the UTOPIA or SET FREE Series.

◆ Pipe size selection

Select the pipe size in line with the following instructions:

1. Between the outdoor unit and the branch pipe (multikit): select the same pipe connection size as for the outdoor unit.
2. Between the branch pipe (multikit) and the indoor unit: select the same pipe connection size as for the indoor unit.

CAUTION

- ***Do not use refrigerant pipe sizes other than those indicated in the corresponding Technical Catalogue for outdoor units. The diameter of the refrigerant pipes depends directly on the power of the outdoor unit.***
- ***If larger diameter refrigerant pipes are used, the circuit lubrication oil tends to separate from the gas carrying it. The compressor will be seriously damaged due to a lack of lubrication.***
- ***If smaller diameter refrigerant pipes are used, the gas or liquid refrigerant will have serious difficulties in circulating. System performance will be affected. The compressor will run under more severe conditions than foreseen and will be damaged in a short space of time.***

◆ Multikit or distributor selection

NOTE

- ***Pipe connection sizes on outdoor units, indoor units and the multikit or distributor vary depending on the system. Consult the Service Manual for the UTOPIA or SET FREE Series.***
- ***The sizes of the indoor and outdoor units are different. Adjust the flare adapter (accessory) to the indoor pipe connection.***

3.2 Copper pipes, sizes, connection and insulation

3.2.1 Copper pipes and sizes

CAUTION

- ***The copper pipe used in the refrigeration installations is different to the copper pipe used in installations carrying domestic or heating water.***
- ***The copper pipe for refrigeration installations is especially treated for outdoors and indoors. The interior surface finish makes it easier for the refrigerant to circulate and withstands the action of the lubricant oil applied to outdoor equipment.***

Prepare the copper pipes provided by the supplier.

Select the pipe with the appropriate diameter and thickness. Use the table below to select the most appropriate pipe:

Nominal diameter		Thickness mm	Supply
mm	Inches		
Ø6.35	1/4	0.80	Roll
Ø9.53	3/8	0.80	Roll
Ø12.7	1/2	0.80	Roll
Ø15.88	5/8	1.00	Roll
Ø19.05	3/4	1.00	Pipe
Ø22.20	7/8	1.00	Pipe
Ø25.40	1	1.00	Pipe
Ø28.60	1-1/8	1.00	Pipe

Always use clean copper pipes with no signs of knocks or cracks. Make sure there is no dust or dampness on the inside. Before you install the pipes, clean the inside with oxygen-free nitrogen gas to eliminate any remains of dust or other substances.

CAUTION

- ***Do not use hand saws, circular saws, abrasive grinders or other tools that generate shavings.***
- ***Strictly follow national or local regulations regarding occupational health and safety.***
- ***Wear appropriate means of protection during cutting or brazing operations and installation (gloves, eye protection, etc).***

On completing the installation of the refrigerant pipes -B-, insulate them appropriately using suitable insulating material -A- and seal the open space between the holes made and the pipe, as shown in the figure.

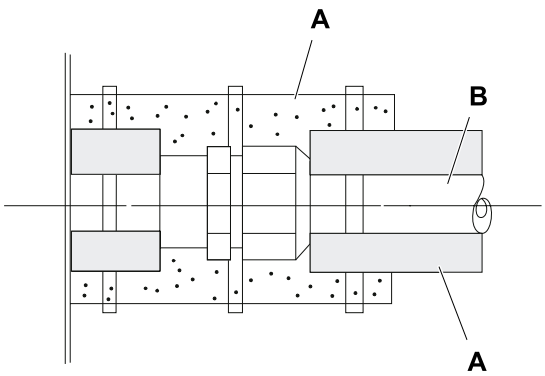

3.2.2 Pipe connection

End of refrigerant pipe protected correctly.

Cover the end of the pipe appropriately when it is to be inserted through holes in walls and roofs, etc.

Keep the ends of the pipes covered while other installation work is being carried out to avoid the entry of dampness or dirt.

End of refrigerant pipe unprotected.

Do not place the pipes directly on the ground without appropriate protection or adhesive vinyl tape to cover the ends.

Where the pipe installation is not completed for a certain amount of time, weld the ends of the pipe to seal. Then fill it with oxygen-free nitrogen gas through a Schrader valve to avoid the accumulation of humidity and/or contamination through dirt.

Secure the connection pipe as indicated in the image. Use the indoor unit's insulation.

A: flare nut on the indoor unit.

B: insulation on the pipe connection to the indoor unit using the insulating material supplied.

C: secure the insulation using the flange supplied or using suitable adhesive tape.

D: Installation refrigerant gas pipe.

E: installation insulation (field-supplied).

F: brazing.

G: flare the pipe after inserting the flare nut.

H: indoor unit insulation.

I: indoor unit.

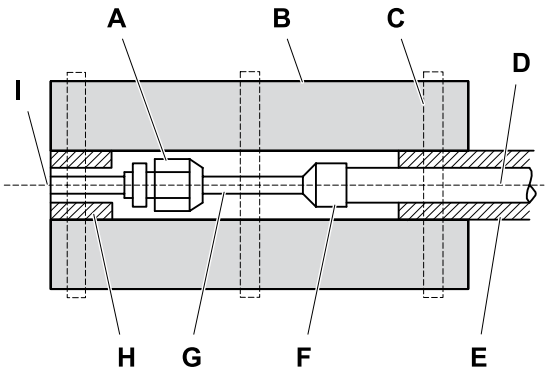

NOTE

- ***Where polyethylene foam insulation is used, a 10 mm thick layer should be used for the liquid pipe and between 15 and 20 mm for the gas pipe.***
- ***Install the insulation after the pipe surface temperature has dropped to the room temperature, otherwise the insulation may melt.***

Do not use insulating material that contains NH_3 (ammonium), as it could damage the copper in the pipe and subsequently cause leaks.

Where the fitter has supplied his own branches, these should be appropriately insulated to avoid decreases in capacity in line with to environmental conditions and condensation on the surface of the piping due to low pressure.

3.2.3 Insulation of multikits and/or branches

Install the insulation packages in the multikits and/or branches using suitable vinyl tape.

3.3 General instructions on the installation of refrigerant pipes

The copper pipe used for the installation must be specific for refrigeration systems: *Copper pipes and sizes, see on page 83*.

The diameter of the refrigerant pipes depends directly on the power of the outdoor unit. The pipe diameter allocated must be respected, in line with the instructions given in Chapter *Refrigerant pipe selection, see on page 82*.

The location of the units and the pipe layout must be carried out in line with the instructions given in the Service Manual corresponding to the outdoor units of the UTOPIA or SET FREE systems, especially when the outdoor unit is situated at a different height than the indoor units.

System performance depends on the distance between the outdoor and indoor unit. This aspect must be taken into account for the installation of the refrigerant pipe. The outdoor units are factory-charged with sufficient refrigerant for a standard installation of certain characteristics. Where the system installation requirements involve an increase in the distance between the outdoor and indoor unit, refrigerant must be added to the installation in line with the instructions given in the Technical Catalogue and the Service Manual corresponding to the outdoor units of the UTOPIA or SET FREE systems.

3.4 Copper refrigerant pipe

3.4.1 Three principles on work with refrigerant pipes

The basic refrigerant pipe installation work must be carried out paying particular attention to avoid the infiltration of humidity or dust while working with the refrigerant piping. Otherwise, rust may appear inside the system or the units and cause serious faults.

Therefore, all work carried out on the copper pipes for refrigerant must follow the three principles described below.

Principle	Cause of the fault	Possible fault	Preventive measure
1. Absence of humidity Ensure the atmosphere remains totally dry	• Water infiltration due to insufficient protection on the ends of the pipes. • Condensation on the inside of the pipes. • Insufficient vacuum.	Ice on the inside of the pipe, on the expansion valve (water obstruction) + Absorption of oil humidity and oxidation ↓ Filter clogging, insulation and compressor fault	Pipe protection: 1. Seal the ends of the pipes. 2. Protect and insulate the ends of the pipes. ↓ Wash ↓ Vacuum dry (*)
2. Cleaning Absence of dust on the inside of the piping	• Dust or other elements entering the ends of the pipes. • Film of rust formed during brazing without nitrogen injection. • Insufficient nitrogen wash after brazing.	Expansion valve, capillary tube and filter clogging. Oil oxidation. Compressor fault ↓ Compressor fault, insufficient cooling or heating	Pipe protection: 1. Fit caps to the ends of the pipes. 2. Protect and insulate the ends of the pipes. ↓ Wash
3. Absence of leaks There must be no leaks	• Brazing fault. • Flaring fault and insufficient torque. • Insufficient torque on compressor connectors.	Lack of refrigerant Drop in performance Compressor fault Oil oxidation ↓ Compressor overheating	Carry out basic brazing work carefully ↓ Carry out basic flaring work carefully ↓ Carry out basic connection work carefully ↓ Airtight test ↓ Preserving of vacuum in the installation

(*) One gram of water becomes approximately 1000 l of steam at 1 Torr. (1 Torr = 1 mmHg = 133.32 Pa). Therefore, a long time must be spent on vacuum work using a small pump.

3.4.2 General information on copper refrigeration pipes

CAUTION

- ***The copper pipe used in the refrigeration installations is different to the copper pipe used in installations carrying domestic or heating water.***
- ***The copper pipe for refrigeration installations is especially treated for outdoors and indoors. The interior surface finish makes it easier for the refrigerant to circulate and withstands the action of the lubricant oil applied to outdoor equipment.***

3.4.3 Diameters of the copper refrigeration pipes

Nominal diameter		Thickness mm	Supply
mm	Inches		
Ø6.35	1/4	0.80	Roll
Ø9.53	3/8	0.80	Roll
Ø12.70	1/2	0.80	Roll
Ø15.88	5/8	1.00	Roll
Ø19.05	3/4	1.00	Pipe
Ø22.20	7/8	1.00	Pipe
Ø25.40	1	1.00	Pipe
Ø28.60	1-1/8	1.00	Pipe

3.4.4 Preparing and cutting copper refrigeration pipes

Preparation

Clean the area where the copper refrigeration pipe preparation work is to be carried out. It must particularly be free of waste, soil, wood or metal shavings and, in general, any substance that could enter the ends of the pipe during handling.

The copper pipe must be clean and have no remains of adhesive, cement, dust or other substances adhered to it.

Where the copper pipe is supplied in rolls, fit a cap on the end and unwind it while it is resting on the ground so that the turning movement of the roll as it is unwound forms a straight pipe.

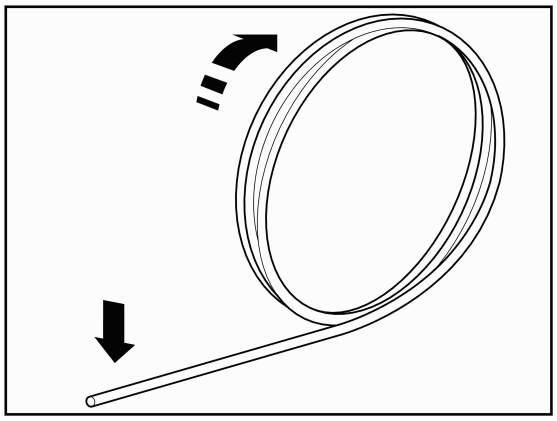

NOTE

- ***The rolls of copper refrigeration pipe are normally supplied with caps on their ends.***
- ***Where the roll of pipe does not come supplied with caps, check that the inside of the pipe is clean. If it is not, use a new roll of pipe.***
- ***It is also possible to cover the end of the pipe temporarily using high quality adhesive tape.***
- ***Do not wind and unwind the pipe continuously, as the properties of the copper for refrigeration pipes are altered, making it more rigid and brittle.***

Cutting

Define the necessary length of pipe and add a few more centimetres to give yourself enough margin in case the cut has to be repeated.

Cut the pipe using a pipe cutter.

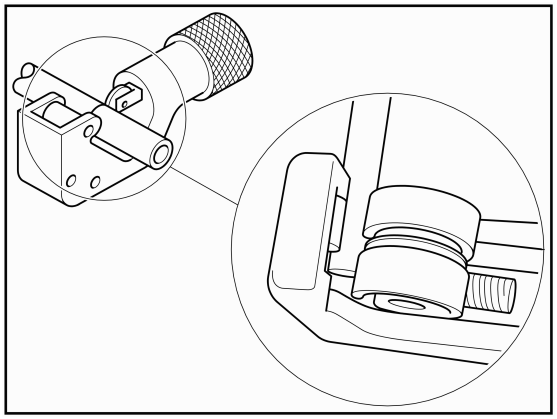

CAUTION

Ensure the pipe cutter rollers remain perfectly seated on the copper pipe.

Remove any internal burrs arising from the pipe cutter using a pipe reamer.

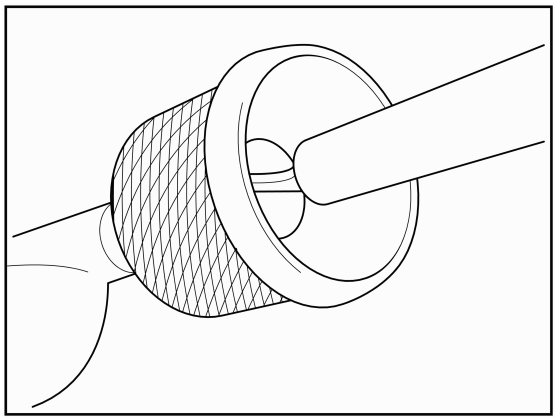

CAUTION

- ***While making the cut, slant the pipe downwards to prevent burrs or shavings from falling inside the pipe.***
- ***Do not use hand saws, circular saws, abrasive grinders or other tools that generate shavings.***
- ***Strictly follow national or local regulations regarding occupational health and safety.***
- ***Wear appropriate means of protection during cutting or brazing operations and installation (gloves, eye protection, etc).***

If the pipe is not to be immediately flared, protect the end of the pipe using a suitable cap or high quality insulation tape.

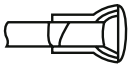

CAUTION

Do not leave the ends of flared pipes unprotected.

3.4.5 Bending copper pipes

Where the refrigerant pipes are to be bent, always use a bending tool or a spring, both of a diameter that is adapted to the pipe to be bent.

The bending radii must be as wide as possible so that the gas or liquid refrigerant flow is not altered and no circulation noise is generated during operation.

NOTE

- ***Bends in refrigerant pipes reduce system performance due to changes in the flow of gas and liquid refrigerant circulation.***
- ***Do not use any other tool to bend pipes, as the pipe may be excessively bent or crushed and its inner diameter reduced.***

CAUTION

Never bend pipes with radii of less than 90°.

3.4.6 Brazing copper refrigeration pipes

Brazing is the most important job in the installation of refrigeration pipes. In the event of an accidental leak due to negligence during the brazing process, the capillary tubes will be obstructed or the compressor seriously damaged.

To guarantee correct brazing between pipe surfaces, prepare them for widening according to the data in the following table.

CAUTION

- ***It is important to check the pipe fitting measurement as indicated in the following table.***
- ***If a tool is used to widen the copper pipe, the dimensions indicated must be respected.***

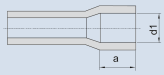

Copper pipe size	Ød1	Tolerance	a
Ø6.35 $^{+0.08}$ / $_{-0.08}$	Ø6.5 $^{+0.1}$ / $_{0}$	$^{+0.33}$ / $_{0.07}$	6
Ø9.53 $^{+0.08}$ / $_{-0.08}$	Ø9.7 $^{+0.1}$ / $_{0}$	$^{+0.35}$ / $_{0.09}$	8
Ø12.7 $^{+0.08}$ / $_{-0.08}$	Ø12.9 $^{+0.1}$ / $_{0}$	$^{+0.38}$ / $_{0.19}$	8
Ø15.88 $^{+0.09}$ / $_{-0.09}$	Ø16.1 $^{+0.1}$ / $_{0}$	$^{+0.41}$ / $_{0.13}$	8
Ø19.05 $^{+0.09}$ / $_{-0.09}$	Ø19.3 $^{+0.1}$ / $_{0}$	$^{+0.44}$ / $_{0.16}$	10
Ø22.22 $^{+0.09}$ / $_{-0.09}$	Ø22.42 $^{+0.1}$ / $_{0}$	$^{+0.39}$ / $_{0.11}$	10
Ø25.4 $^{+0.12}$ / $_{-0.12}$	Ø25.6 $^{+0.1}$ / $_{0}$	$^{+0.42}$ / $_{0.08}$	12
Ø28.58 $^{+0.12}$ / $_{-0.12}$	Ø28.78 $^{+0.1}$ / $_{0}$	$^{+0.42}$ / $_{0.08}$	12
Ø31.75 $^{+0.12}$ / $_{-0.12}$	Ø32.0 $^{+0.1}$ / $_{0}$	$^{+0.47}$ / $_{0.13}$	12
Ø38.1 $^{+0.12}$ / $_{-0.12}$	Ø38.3 $^{+0.1}$ / $_{0}$	$^{+0.52}$ / $_{0.18}$	14

The necessary brazing must be done by brazing, using a copper and silver alloy.

Before you start brazing, install a dry nitrogen gas injection system inside the pipes to prevent the copper from being exposed to the air while it is subjected to high temperatures.

CAUTION

- ***Do not braze on refrigerant pipes without a dry nitrogen gas injection system.***
- ***Otherwise, a layer of rust will form that may become detached when the refrigeration system is started, causing filter or compressor blockages.***
- ***NEVER USE oxygen, acetylene or fluorocarbonated gas to replace nitrogen gas: this will cause an explosion or will generate toxic gas.***

1. Heat the outer pipe previously to ensure the filler metal flows more easily.
2. Heat the inner pipe evenly.
3. Rubber cap.
4. Valve with no packing.
5. High pressure pipe.
6. 0.03 to 0.05 MPa (0.3 to 0.5 kg/cm^2 G).
7. Reducer valve: only open the valve when gas is required.
8. Nitrogen gas flow, 0.05 m^3/h or less.

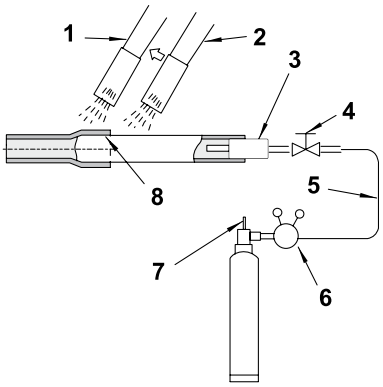

CAUTION

Keep the nitrogen gas pressure within the indicated values. A rise in pressure in the pipe could cause an explosion.

3.4.7 Flared connection mounting

Line up the end of the flared pipe to face the fitting to which it is to be threaded.

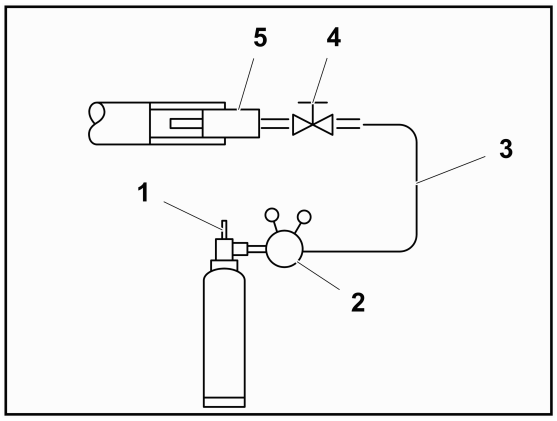

Gently rest the female cone on the male cone and check that the measurement is correct. Keep the connection lined up with one hand and gently thread on the flare nut with the other.

Tighten the connection to the corresponding tightening torque indicated in the table below.

Nominal diameter		Tightening torque
mm	Inches	
Ø6.35	1/4	20 Nm
Ø9.53	3/8	40 Nm
Ø12.7	1/2	60 Nm
Ø15.88	5/8	80 Nm
Ø19.05	3/4	100 Nm
Ø22.20	7/8	–
Ø25.40	1	–
Ø28.60	1-1/8	–

CAUTION

- ***Secure the fixed connection with a suitable wrench and use a torque wrench to tighten the flare nut on the threaded connections.***
- ***Do not exceed the torque value indicated in the table. The fitting can become misshapen and the connection may leak.***

3.4.8 Refrigerant pipe insulation

The refrigerant circulates through the pipes at a very low temperature (several degrees below zero, depending on the time of year and the installation). The difference in temperature with the ambient air is extremely large and causes two significant phenomena to be taken into account:

- Cold irradiation along the entire pipe.
- Condensation of the humidity in the surrounding air.

Actually, cold irradiation is the temperature gain experienced by the gas, as when it circulates under pressure and at such low temperatures along the inside of the pipes, it is actually liquid and obtains the outdoor temperature (boiling at a very low temperature) to turn into gas.

As a result of the temperature gain (although it is actually perceived as cold emission), the gas loses its capacity to cool and the system does not perform as expected. Furthermore, the humidity in the surrounding air condenses on the pipe and the greater the temperature difference and the longer the pipe, the more water is produced.

In view of this, the refrigerant pipes must be fitted with a suitable insulation system that prevents the increase in temperature of the refrigerant and the subsequent loss of energy and the condensation of water along the entire pipe.

Refrigerant pipes must always be separately insulated, using closed cell insulation foam designed especially for refrigeration. This insulation foam, supplied by the installer, can be obtained in different formats. The most common is in the form of sheets and rolls of tubes of different diameters.

Furthermore, all connections between the different sections of insulation tubes must be reinforced with adhesive tape of the same characteristics.

Once all of the unit installation and adjustment work is complete, all threaded joints and valves must also be covered with adhesive tape.

3.4.9 Refrigerant pipe suspension

Only suspend the refrigerant pipes at specific points of the building. Whenever possible, avoid suspending them from parts subject to structural movement, e.g. places close to expansion joints or outer walls, etc.

Prevent the refrigerant pipes from touching weak parts of the building, such as walls (non-structural), partition walls, ceilings, etc. Otherwise, operating noise may be caused by pipe vibrations (pay special attention in the case of short pipes).

A: points where the refrigerant pipes pass through the different structural parts of the building.

B: indoor unit.

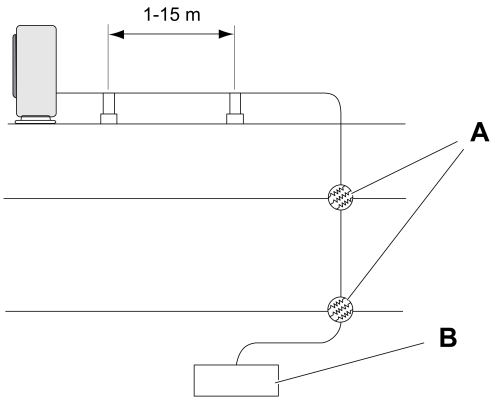

Use suitable suspension systems for refrigeration pipes or clamps to suspend the pipes, as shown in the diagram.

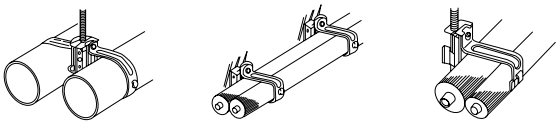

3.5 Refrigerant and drain hose installation

3.5.1 RCI - 4-way cassette (1.0-6.0)FSN3E

◆ Refrigerant pipe installation

The correct position for the refrigerant pipe connection is shown below. The pipe connection must be accessible from all directions (above, left or right).

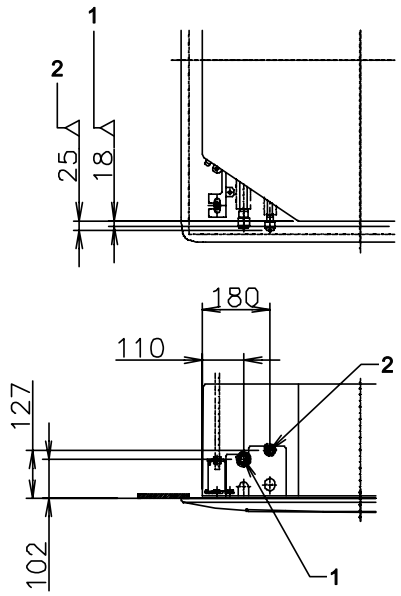

Models	(1) Gas pipe mm (inches)	(2) Liquid pipe mm (inches)
RCI-(1.0/1.5)FSN3E	Ø12.70 (1/2)	Ø6.35 (1/4)
RCI-2.0FSN3E	Ø15.88 (5/8)	
RCI-(2.5–6.0)FSN3E		Ø9.53 (3/8)

◆ Drain pipe installation

The correct position for the drain hose connection -A- is shown below.

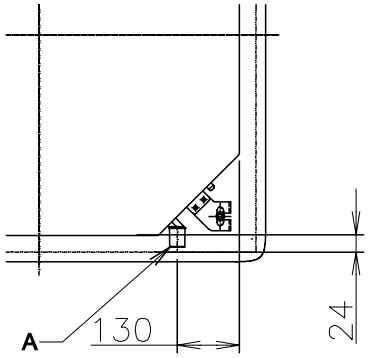

Prepare a polyvinyl chloride (PVC) pipe with an outer diameter of 32 mm.

Secure the pipe with the clamp and adhesive supplied.

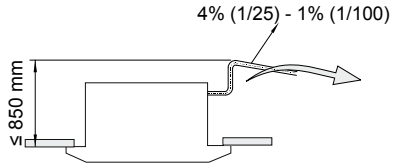

The drain hose must have a gradient of 4% (1/25) to 1% (1/100).

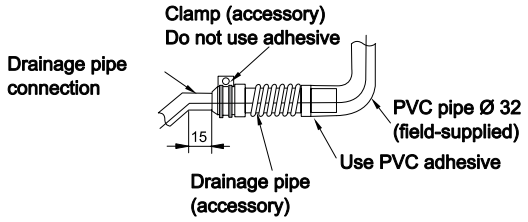

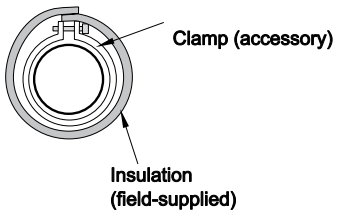

CAUTION

- ***Do not apply too much force when making the drain hose connection as this could damage it.***
- ***Do not use bent or twisted drain pipes as these will cause water leaks.***

Then insulate the drain hose appropriately.

3.5.2 RCIM-4-way cassette (compact) (1.0-2.0)FSN2

◆ Refrigerant pipe installation

The correct position for the refrigerant pipe connection is shown below. The pipe connection must be accessible from all directions (above, left or right).

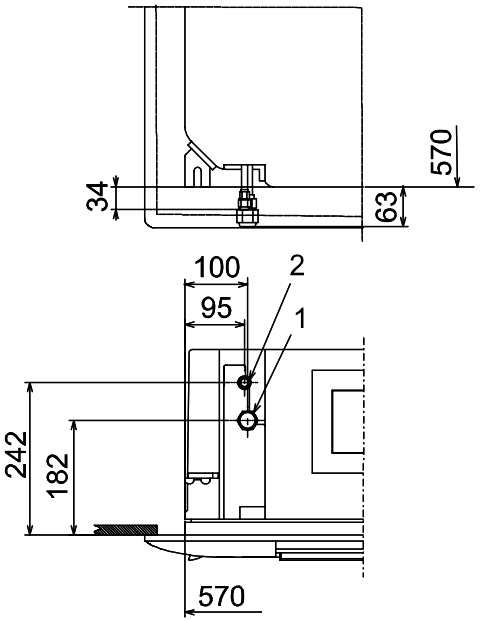

Models	(1) Gas pipe mm (inches)	(2) Liquid pipe mm (inches)
RCIM-(1.0/1.5)FSN2E	Ø12.70 (1/2)	Ø6.35 (1/4)
RCIM-2.0FSN2E	Ø15.88 (5/8)	

◆ Drain pipe installation

The correct position for the drain hose connection is shown below.

Prepare a polyvinyl chloride (PVC) pipe with an outer diameter of 32 mm.

Secure the pipe with the clamp and adhesive supplied.

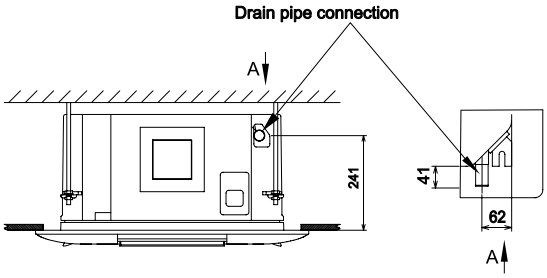

The drain hose must have a gradient of 1% (1/100) to 4% (1/25).

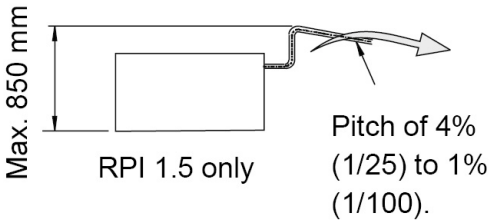

Consider the following sizes: a + b + c ≤ 780 mm.

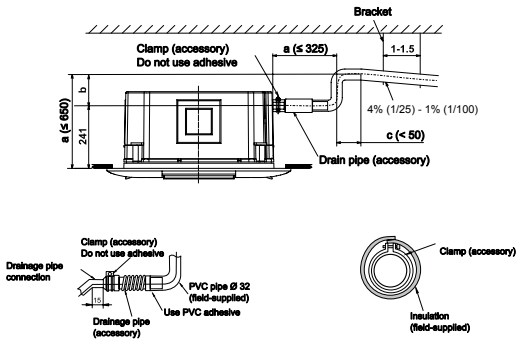

CAUTION

- ***Do not apply adhesive between the drain hose connection and the drain hose.***
- ***Do not apply too much force when making the drain hose connection as this could damage it.***
- ***Do not use bent or twisted drain pipes as these will cause water leaks.***

Then insulate the drain hose appropriately.

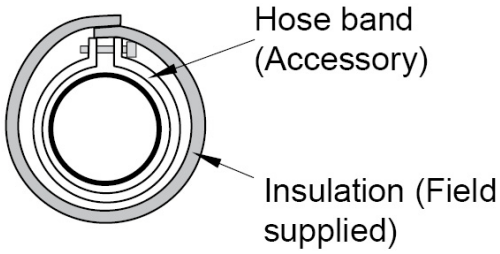

3.5.3 RCD - 2-way cassette (1.0-5.0)FSN2

◆ Refrigerant pipe installation

The correct position for the refrigerant pipe connection is shown below. The pipe connection must be accessible from all directions (above, left or right).

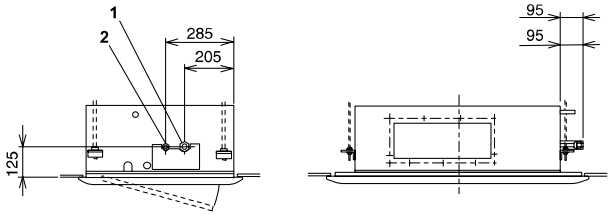

Models	(1) Gas pipe mm (inches)	(2) Liquid pipe mm (inches)
RCD-(1.0/1.5)FSN2	Ø12.70 (1/2)	Ø6.35 (1/4)
RCD-2.0FSN2	Ø15.88 (5/8)	
RCD-(2.5–5.0)FSN2		Ø9.53 (3/8)

◆ Drain pipe installation

The correct position for the drain hose connection is shown below.

Prepare a polyvinyl chloride (PVC) pipe with an outer diameter of 32 mm.

Secure the pipe with the clamp and adhesive supplied.

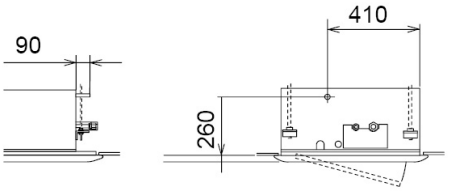

The drain hose must have a gradient of 1% (1/100) to 4% (1/25).

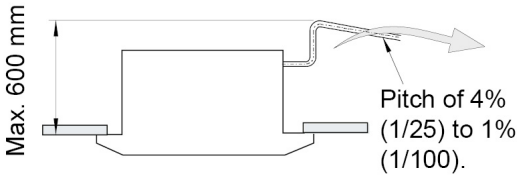

CAUTION

- ***Do not apply adhesive between the drain hose connection and the drain hose.***
- ***Do not apply too much force when making the drain hose connection as this could damage it.***
- ***Do not use bent or twisted drain pipes as these will cause water leaks.***

Then insulate the drain hose appropriately.

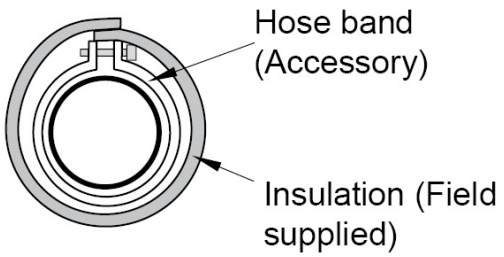

3.5.4 RPC - Ceiling type (2.0-6.0)FSN2E

◆ Refrigerant pipe installation

The correct position for the refrigerant pipe connection is shown below. The refrigerant piping can be connected to the top or rear of the unit.

Each part has a die-cut hole: *Unit installation, see on page 30*.

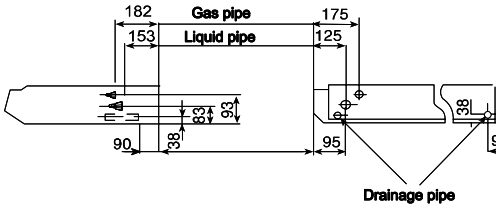

Models	(1) Gas pipe mm (inches)	(2) Liquid pipe mm (inches)
RPC-2.0FSN2E	Ø15.88 (5/8)	Ø6.35 (1/4)
RPC-(2.5–6.0)FSN2E		Ø9.53 (3/8)

The piping must be installed from the bottom of the unit.

1 Remove the air inlet grille and slide the buttons on the grille backwards.

1	Slide
2	Knob

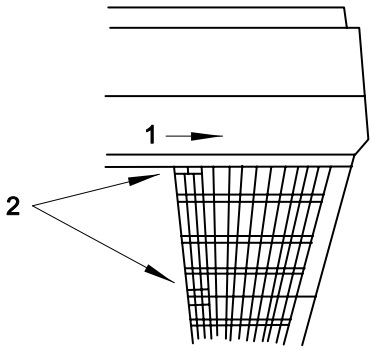

2 Push and slide the air inlet grille backwards and open it.

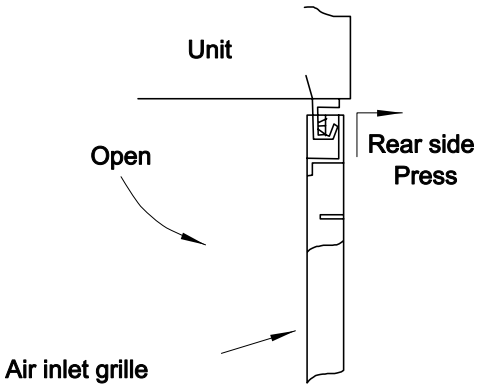

3 Remove the die-cut panel from the required part of the unit to install the refrigerant pipes.

Upper side.

Open the Knockout hole

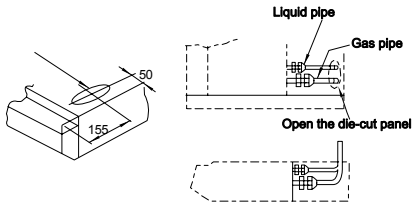

Seal piping

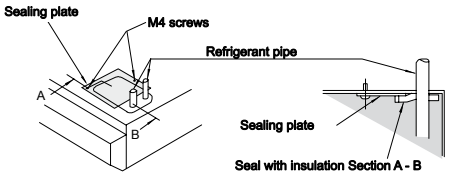

4 Install the pipes through it and seal them using the insulation supplied, as indicated below.

Rear side.

Open the Knockout hole

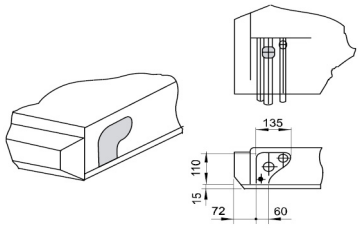

Seal piping

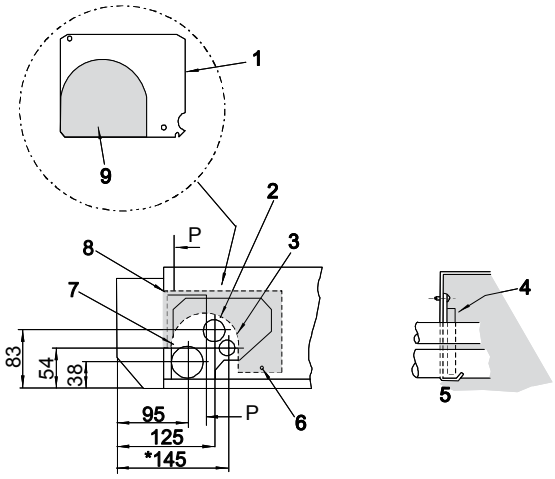

1	Sealing plate supplied (0.8x118x142 mm)
2	Gas refrigerant pipe
3	Liquid refrigerant pipe
4	Seal with insulation
5	Sec. P.P.
6	M4 screw
7	Sealing plate
8	M4 screw
9	Knockout hole

◆ Drain pipe installation

NOTE

The normal direction for connecting the drain hose is on the right side (when the unit is seen from the outlet grille side). The connection can be made from the left side if there are construction elements of the building around it.

Connection on the right-hand side

1 Insert the drain hose in the clamp “A”.
2 Push the drain hose towards the boss until it reaches the end of the pan.
3 Tighten the screw on the wire clamp to secure the pipe around the drain connection without causing water leaks.
4 Insulate the drain hose around the wire clamp to avoid condensation.
5 Insert the drain pipe into the drain hose and secure it using the wire clamp “B”.

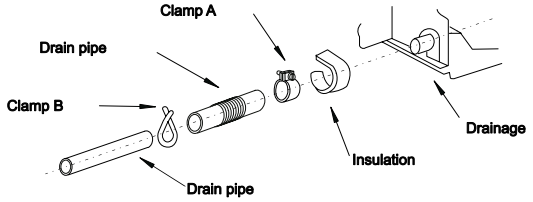

Connection on the left-hand side

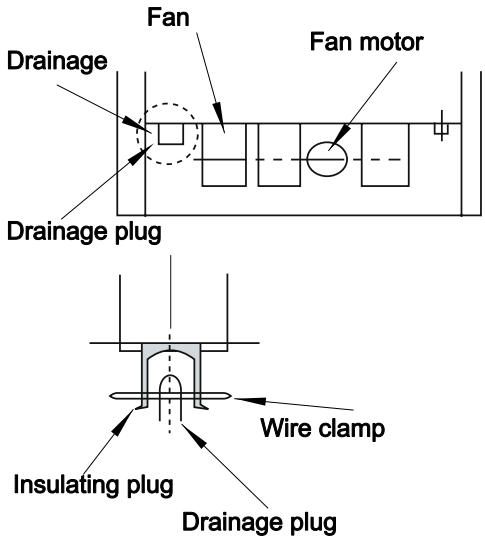

1 Remove the plug from the drain hose by cutting the securing clip.
2 Remove the insulating material.
3 Remove the drain plug and insert the pipe into the wire clamp.
4 Insert the drain plug into the right-hand boss using a screwdriver.

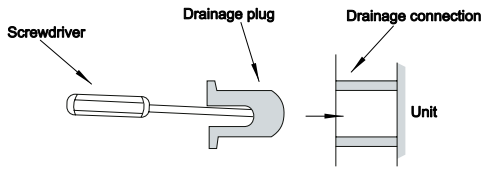

5 Seal the connection using waterproof chloride sealing material and secure with the pin.

6 Place the insulating material around the drain connection.

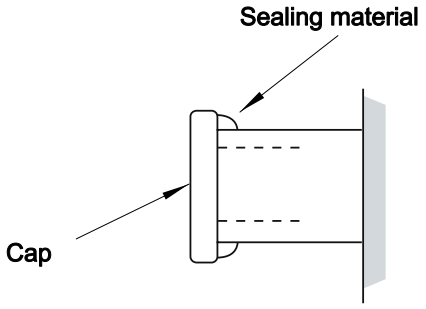

Drain hose connection

The correct position for the drain hose connection is shown below.

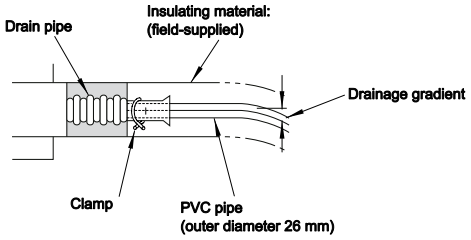

Prepare a polyvinyl chloride (PVC) pipe with an outer diameter of 26 mm.

The drain hose must have a gradient of 1% (1/100) to 4% (1/25).

The drain hose cannot be installed on an upwards line, not even on one section of the installation. In this case, the condensate water accumulates at the lowest point immediately before the raised section of the installation.

Seal the connection using waterproof chloride sealing material.

Insulate the connection part carefully.

Secure the drain pipe to the connection part using the clamp supplied.

CAUTION

- ***Do not apply too much force when making the drain hose connection as this could damage it.***
- ***Do not use bent or twisted drain pipes as these will cause water leaks.***

Insulate the drain pipe and suspend it individually as indicated in the figure.

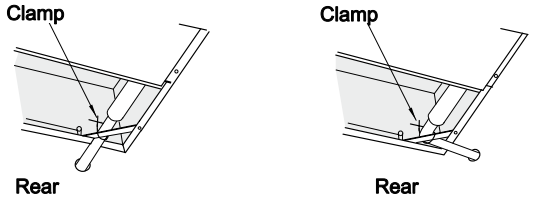

CAUTION

- ***Do not apply adhesive between the drain hose connection and the drain hose.***
- ***Do not install the condensate discharge pipe next to the gas refrigerant pipes. Any accumulated water could freeze and block the discharge system.***

Check the correct working order of the drainage system.

3.5.5 RPI - Ducted indoor unit (0.8-1.5)FSN2E

◆ Refrigerant pipe installation

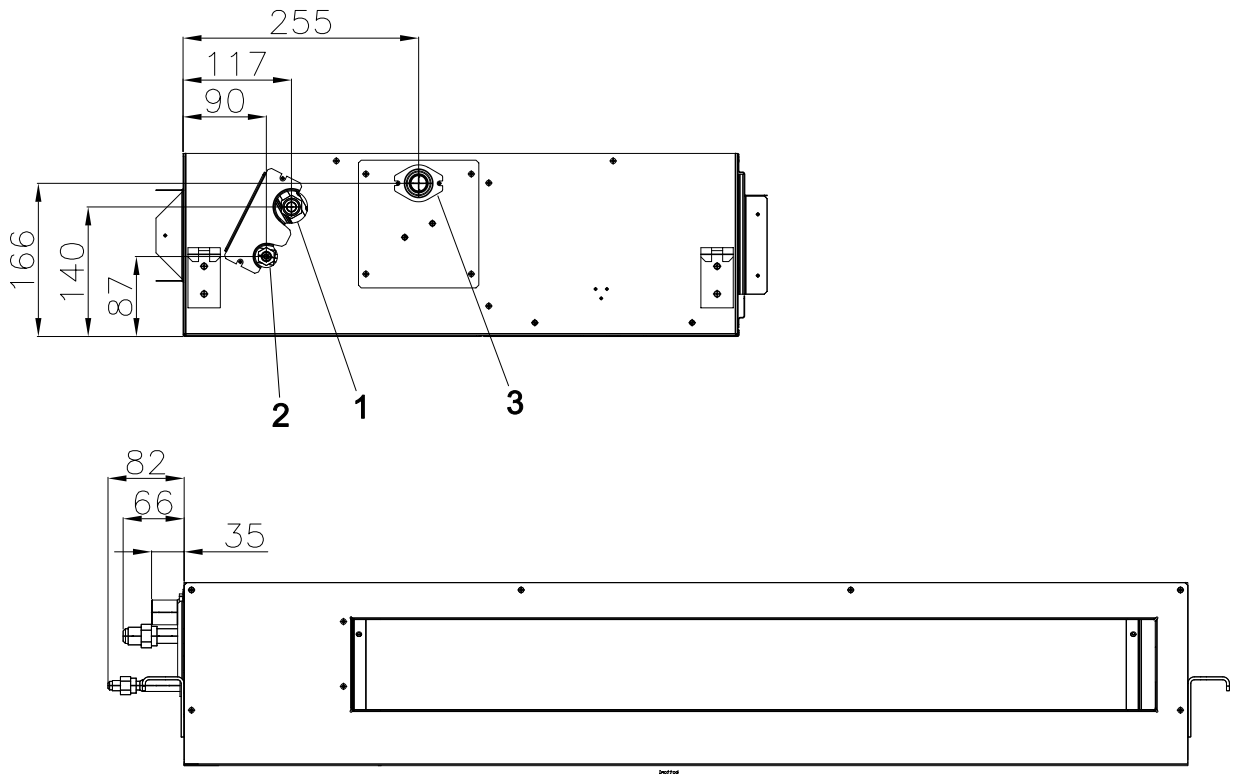

1	Gas Piping Connection
2	Liquid Piping Connection
3	Drain Piping

The correct position for the refrigerant pipe connection is shown below.

Models	Gas pipe mm (inches)	Liquid pipe mm (inches)
RPI	Ø12.7 (1/2)	Ø6.35 (1/4)

NOTE

When installing the pipes, leave enough space for maintenance work in the electrical box of the unit.

Dimensions of the flare and thickness of the copper pipe

Nominal diameter		Thickness mm	Measurement $A^{+0}/_{-0.4}$ mm
mm	inches		
Ø6.35	1/4	0.80	9.1
Ø9.53	3/8	0.80	13.2
Ø12.70	1/2	0.80	16.6
Ø15.88	5/8	1.00	19.7

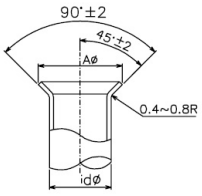

Dimensions of the flare nuts for flared connections

Nominal diameter		Measurement B mm
mm	inches	
Ø6.35	1/4	17
Ø9.53	3/8	22
Ø12.70	1/2	26
Ø15.88	5/8	29

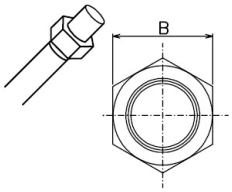

◆ Drain pipe installation

The correct position for the drain hose connection is shown below.

Prepare a polyvinyl chloride (PVC) pipe with an outer diameter of 32 mm.

The drain hose must have a gradient of 1% (1/100) to 4% (1/25).

The drain hose cannot be installed on an upwards line, not even on one section of the installation. In this case, the condensate water accumulates at the lowest point immediately before the raised section of the installation.

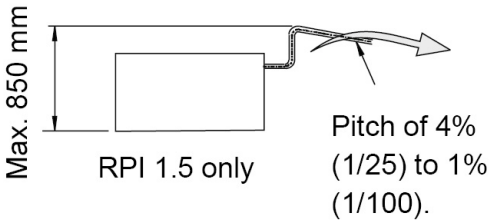

NOTE

If the relative humidity of the inlet air or the ambient air exceeds 80% in the place where the unit is installed, fit an auxiliary drain pan (field-supplied) below the indoor unit, as indicated in the figure.

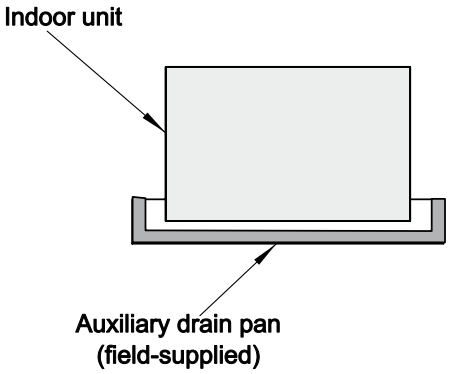

3.5.6 RPI - Ducted indoor unit (2.0-10.0)FSN3E

◆ Refrigerant pipe installation

The correct position for the refrigerant pipe connection is shown below.

RPI-(2.0-6.0)

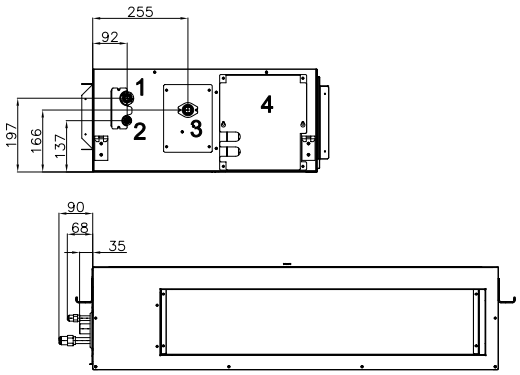

RPI-(8.0/10.0)

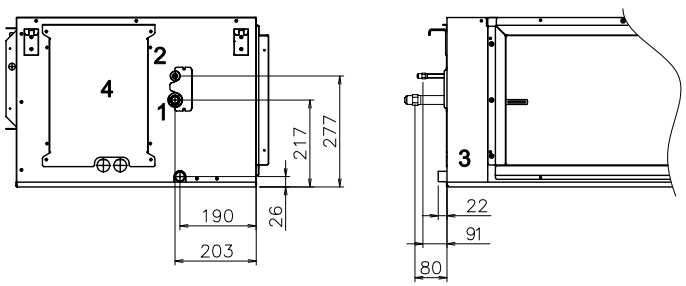

1	Gas pipe
2	Liquid pipe
3	Drain hose
4	Electrical box

Models	Gas pipe mm (inches)	Liquid pipe mm (inches)
RPI-2.0FSN3E	Ø15.88 (5/8)	Ø6.35 (1/4)
RPI-(2.5/3.0)FSN3E		Ø9.53 (3/8)
RPI-(4.0-6.0)FSN3E		
RPI-8.0FSN3E	Ø19.05 (5/8)	
RPI-10.0FSN3E	Ø22.20 (7/8)	

NOTE

When installing the pipes, leave enough space for maintenance work in the electrical box of the unit.

Dimensions of the flare and thickness of the copper pipe

Nominal diameter		Thickness mm	Measurement $A^{+0}/_{-0.4}$ mm
mm	inches		
Ø6.35	1/4	0.80	9.1
Ø9.53	3/8	0.80	13.2
Ø12.70	1/2	0.80	16.6
Ø15.88	5/8	1.00	19.7

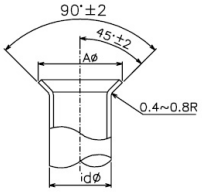

Dimensions of the flare nuts for flared connections

Nominal diameter		Measurement B mm
mm	inches	
Ø6.35	1/4	17
Ø9.53	3/8	22
Ø12.70	1/2	26
Ø15.88	5/8	29

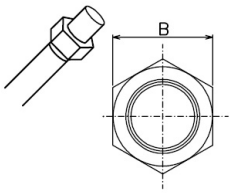

◆ Drain pipe installation

The correct position for the drain hose connection is shown below.

RPI-(2.0–6.0)FNS3E

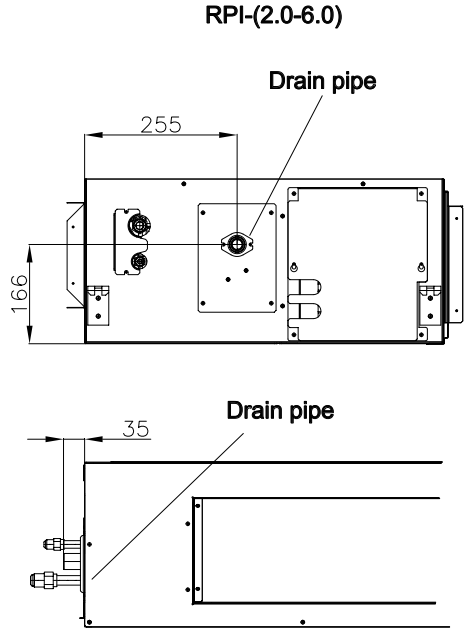

RPI-(8.0/10.0)FSN3E

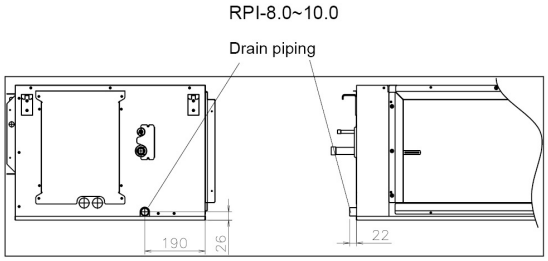

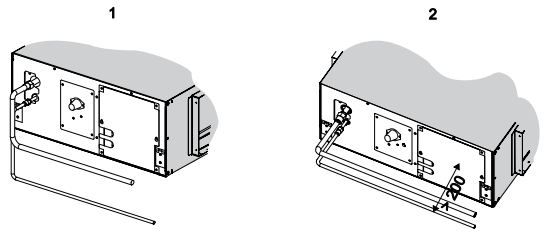

NOTE

Do not install refrigerant pipes at the access to the electrical box and the drain hose. Install in line with the two possibilities shown in the figure.

Prepare a polyvinyl chloride (PVC) pipe with an outer diameter of 32 mm (25 mm for RPI-(8.0/10.0)FSN3E).

Secure the pipe with the clamp and adhesive supplied (only for RPI-(8.0/10.0)FSN3E).

The drain hose must have a gradient of 1% (1/100) to 4% (1/25).

The drain hose cannot be installed on an upwards line, not even on one section of the installation. In this case, the condensate water accumulates at the lowest point immediately before the raised section of the installation.

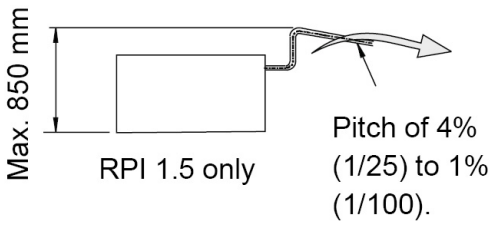

Then insulate the drain hose appropriately (only for RPI-(2.0–6.0)FSN3E).

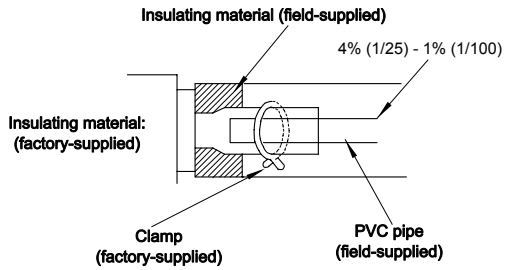

Connect a trap to the drain hose at the angle indicated, as indicated in the figure (for RPI-(8.0/10.0)FSN3E).

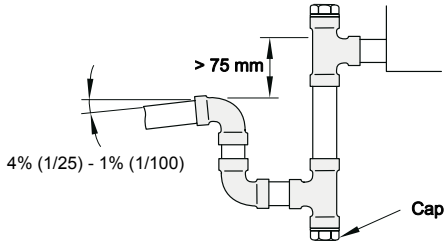

NOTE

If the relative humidity of the inlet air or the ambient air exceeds 80% in the place where the unit is installed, fit an auxiliary drain pan (field-supplied) below the indoor unit, as indicated in the figure.

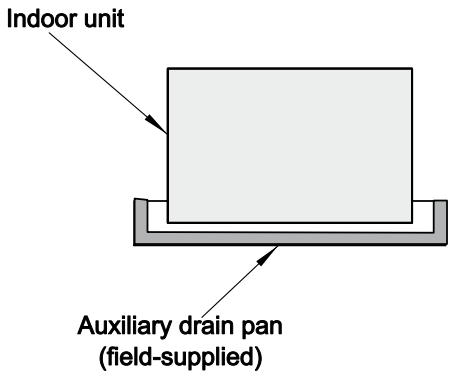

3.5.7 RPIM - Ducted indoor unit (0.8-1.5)FSN2E(-DU)

◆ Refrigerant pipe installation

The pipe connections are inside the unit. Access the refrigerant pipe connection by removing the fan cover on the unit.

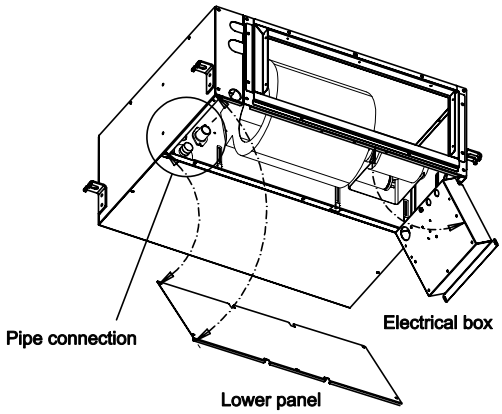

❶ Gas piping

❷ Liquid piping

❸ Drain pipe

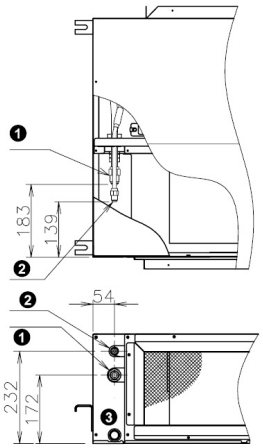

The correct position for the refrigerant pipe connection is shown below.

Models	Gas pipe mm (inches)	Liquid pipe mm (inches)
RPIM(0.8–1.5)FSN2E	Ø12.70 (1/2)	Ø6.35 (1/4)

NOTE

When installing the pipes, leave enough space for maintenance work in the electrical box of the unit.

Dimensions of the flare and thickness of the copper pipe

Nominal diameter		Thickness mm	Measurement $A^{+0}/_{-0.4}$ mm
mm	inches		
Ø6.35	1/4	0.80	9.1
Ø9.53	3/8	0.80	13.2
Ø12.70	1/2	0.80	16.6
Ø15.88	5/8	1.00	19.7

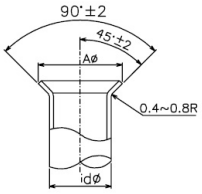

Dimensions of the flare nuts for flared connections

Nominal diameter		Measurement B mm
mm	inches	
Ø6.35	1/4	17
Ø9.53	3/8	22
Ø12.70	1/2	26
Ø15.88	5/8	29

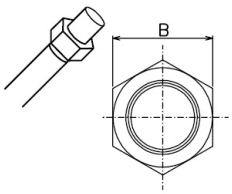

◆ Drain pipe installation

Drain hose installation:

1. Insert the drain hose in the clamp "A".
2. Push the drain hose towards the boss until it reaches the end of the pan.
3. Tighten the screw on the wire clamp to secure the pipe around the drain connection without causing water leaks.
4. Insulate the drain hose around the wire clamp to avoid condensation.
5. Insert the drain pipe into the drain hose and secure it using the wire clamp “B”.

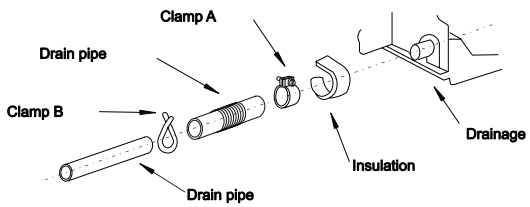

Connect a trap to the drain hose at the angle indicated, as indicated in the figure.

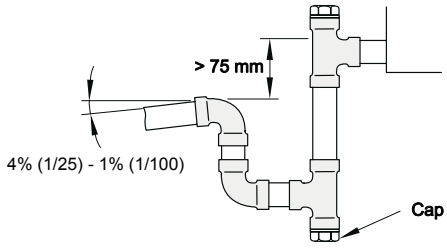

NOTE

If the relative humidity of the inlet air or the ambient air exceeds 80% in the place where the unit is installed, fit an auxiliary drain pan (field-supplied) below the indoor unit, as indicated in the figure.

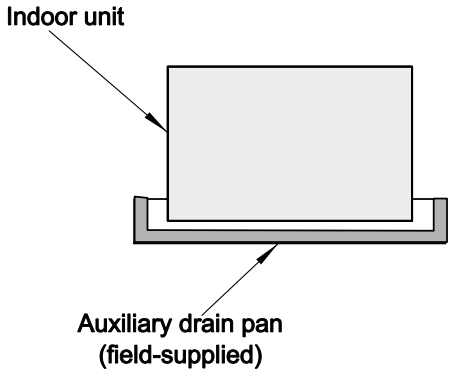

3.5.8 RPK - Wall type (1.0-4.0)FSN(H)2M

◆ Refrigerant pipe installation

Gas pipe connection

The position of the gas pipe connection is possible in all directions (above, left or right).

Model	Measurements (mm)			
	a	b	c	b
RPK-(1.0/1.5)FSN(H)2M	410	108	302	195
RPK–2.0FSN(H)2M	440	150	290	240
RPK-(2.5-4.0)FSN(H)2M	654	141	513	297

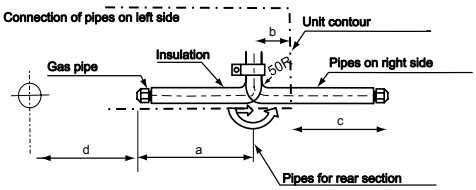

For RPK-2.0 only: if the gas pipe diameter is 12.7 mm, remove the gasket fitted at the connection.

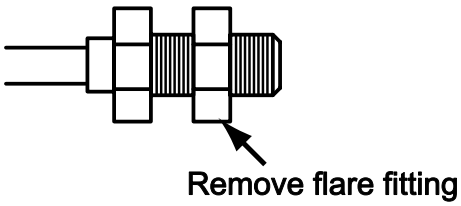

Liquid pipe connection

Model	Measurements (mm)			
	e	f	g	h
RPK-(1.0/1.5)FSN(H)2M	480	108	372	125
RPK–2.0FSN(H)2M	470	150	320	210
RPK-(2.5-4.0)FSN(H)2M	572	141	431	379

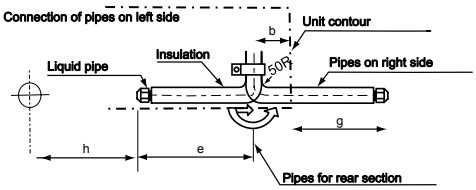

Pipes on the right, left and rear side

Right side

Cut the corner using a plastic knife and completely remove any sharp edges, as indicated in the figure.

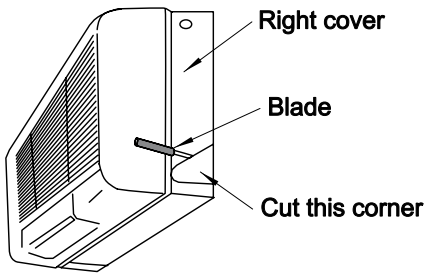

Left side

Cut the corner using a plastic knife and completely remove any sharp edges, as indicated in the figure.

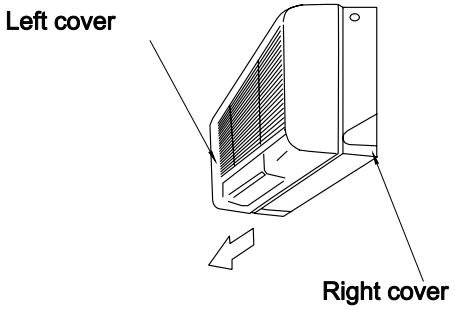

Rear side

Where the pipes are located on the left, the drain hose must also be located on the left.

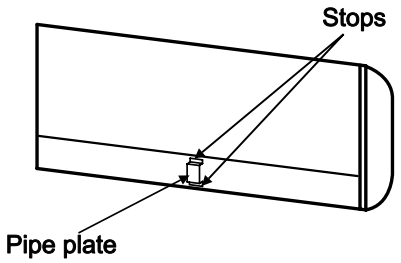

Models	Gas pipe mm (inches)	Liquid pipe mm (inches)
RPK-(1.0/1.5)FSN(H)2M	Ø12.70 (1/2)	Ø9.53 (3/8) (FSNH2M) Ø6.35 (1/4) (FSN2M)
RPK–2.0FSN(H)2M	Ø15.88 (5/8)	Ø6.35 (1/4)
RPK-(2.5-4.0)FSN(H)2M	Ø15.88 (5/8)	Ø9.53 (3/8)

Dimensions of the flare and thickness of the copper pipe

Nominal diameter		Thickness mm	Measurement $A^{+0}/_{-0.4}$ mm
mm	inches		
Ø6.35	1/4	0.80	9.1
Ø9.53	3/8	0.80	13.2
Ø12.70	1/2	0.80	16.6
Ø15.88	5/8	1.00	19.7

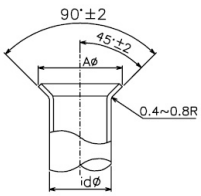

Dimensions of the flare nuts for flared connections

Nominal diameter		Measurement B mm
mm	inches	
Ø6.35	1/4	17
Ø9.53	3/8	22
Ø12.70	1/2	26
Ø15.88	5/8	29

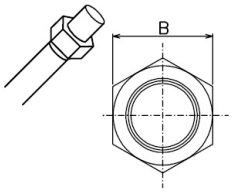

◆ Drain pipe installation

NOTE

The normal direction for connecting the drain hose is on the right side (when the unit is seen from the outlet grille side). The connection can be made from the left side or from the rear if there are construction elements of the building around it.

Model	A	B	C
1.5	45	560	115
2.0	45	560	150
2.5-4.0	45	560	150

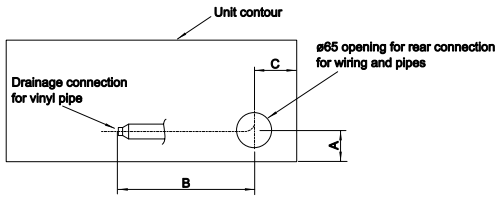

If the drain hose connection side is to be changed: remove the drain hose plug and fit it in the pipe on the opposite side.

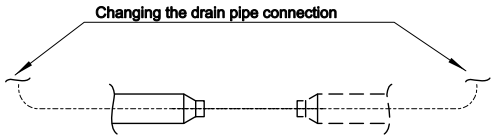

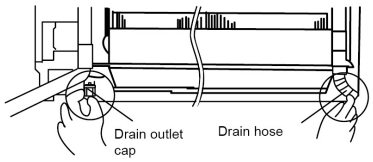

Prepare a polyvinyl chloride (PVC) pipe with an outer diameter of 26 mm.

Connect the drain hose as indicated in the figure.

The drain hose must have a gradient of 1% (1/100) to 4% (1/25).

The drain hose cannot be installed on an upwards line, not even on one section of the installation. In this case, the condensate water accumulates at the lowest point immediately before the raised section of the installation.

Use vinyl chloride adhesive to connect the drain hose.

After inserting the pipe fully, secure it using the clamp supplied.

Check the correct working order of the drainage system.

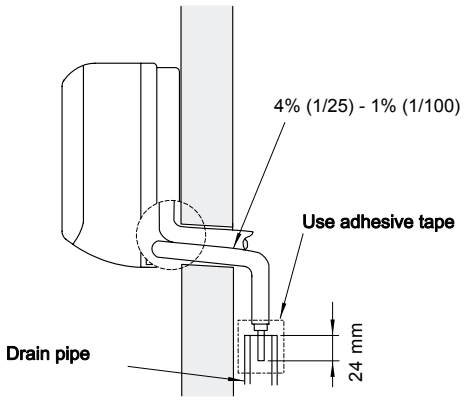

3.5.9 RPF(I)-Floor type (1.0-2.5)FSN2E

◆ Refrigerant pipe installation

The correct position for the refrigerant pipe connection is shown below.

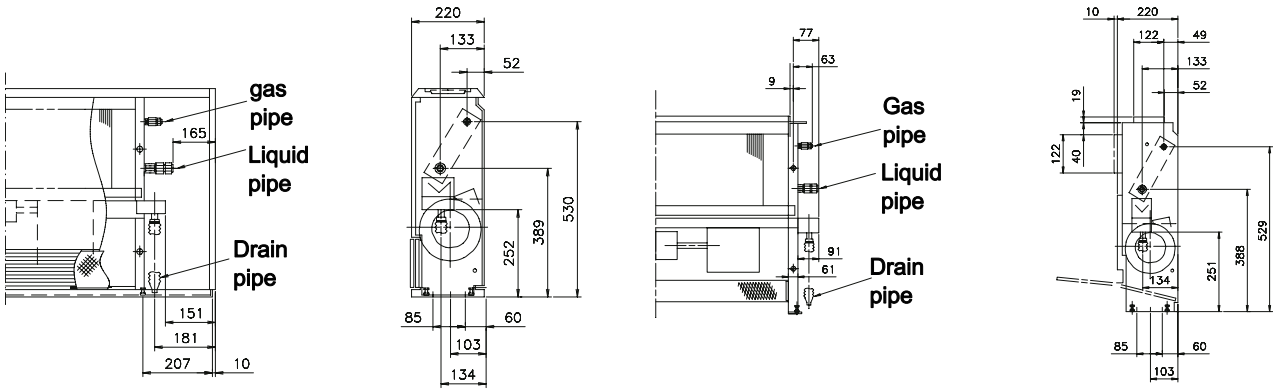

Models	Gas pipe mm (inches)	Liquid pipe mm (inches)	Drain hose mm
RPF(I)-1.5FSN2E	Ø12.70 (1/2)	Ø6.35 (1/4)	Ø18.5
RPF(I)-2.0FSN2E	Ø15.88 (5/8)		
RPF(I)-2.5FSN2E		Ø9.53 (3/8)	

Dimensions of the flare and thickness of the copper pipe

Nominal diameter		Thickness mm	Measurement $A^{+0}/_{-0.4}$ mm
mm	inches		
Ø6.35	1/4	0.80	9.1
Ø9.53	3/8	0.80	13.2
Ø12.70	1/2	0.80	16.6
Ø15.88	5/8	1.00	19.7

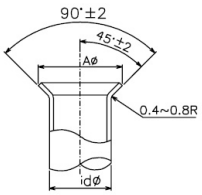

Dimensions of the flare nuts for flared connections

Nominal diameter		Measurement B mm
mm	inches	
Ø6.35	1/4	17
Ø9.53	3/8	22
Ø12.70	1/2	26
Ø15.88	5/8	29

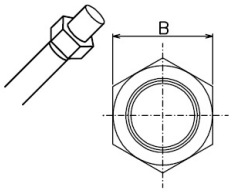

◆ Drain pipe installation

The correct position for the drain hose connection is shown below.

Prepare a polyvinyl chloride (PVC) pipe with an outer diameter of 18.5 mm.

Secure the pipe with the adhesive supplied.

Insulate the drain hose after connecting the pipe, as indicated in the figure.

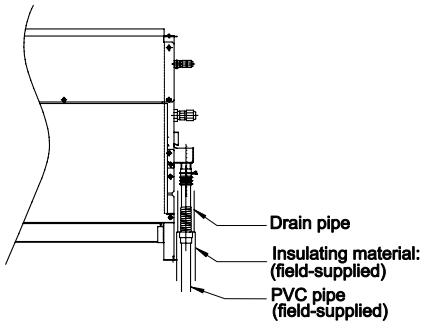

3.6 Refrigerant charge

NOTE

For matters relating to the refrigerant charge in the installation, consult the Technical Catalogue and Service Manual corresponding to the outdoor units of the UTOPIA or SET FREE systems.

3.7 Precautions in the event of refrigerant leaks

DANGER

Fitters and the designers of the installations must strictly observe local and national legislation, and local codes regarding safety requirements in the event of refrigerant leaks.

3.7.1 Maximum permissible concentration of hydrofluorocarbon (HFC)

The R410A refrigerant gas, used in the equipment, is non-flammable and non-toxic.

DANGER

In the event of a leak, the gas will spread around the room, displacing the air, and could therefore result in asphyxia.

According to Standard EN378-1, the maximum permissible concentration of HFC R410A gas in the air is 0.44 kg/m^3. Therefore, effective measures must be adopted to maintain the concentration of R410A gas in the air below 0.44 kg/m^3 in the event of a leak.

3.7.2 Calculation of the concentration of refrigerant

1. Calculate the total quantity of refrigerant *R* (kg) charged in the system; to do so, connect all the indoor units of the rooms in which you wish to have air conditioning.
2. Calculate the volume *V* (m^3) of each room.
3. Calculate the refrigerant concentration *C* (kg/m^3) of the room in accordance with the following formula:

$$R / V = C$$

R: total quantity of refrigerant charged (kg).

V: volume of the room (m^3).

C: refrigerant concentration (= 0.44 kg/m^3 for R410A gas).

3.7.3 Countermeasures in the event of refrigerant leaks

The room should have the following characteristics in case of a leak of refrigerant:

1. Opening without shutter to permit the circulation of fresh air in the room.
2. Opening without door measuring 0.15%, or greater, of the floor surface.
3. A fan with a capacity of at least 0.4 m^3/minute per ton of Japanese refrigeration (=volume moved by the compressor / 5.7 m^3/h) or above, connected to a gas sensor in the air conditioning system that uses refrigerant.

DANGER

Special attention should be given to areas where the refrigerant may be deposited and stay in the room, such as basements or similar, as the gas is heavier than air.

HITACHI
Inspire the Next

4. Electrical wiring

Index

4.1 Unit electrical wiring and connection..... 116

4.1.1 Wiring and main switch selection..... 116
4.1.2 Electrical connection of RCI units..... 117
4.1.3 Electrical connection of RCIM units..... 119
4.1.4 Electrical connection of RCD units..... 122
4.1.5 Electrical connection of RPC units..... 124
4.1.6 Electrical connection of RPI units..... 125
4.1.7 Electrical connection of RPIM units..... 129
4.1.8 Electrical connection of RPK units..... 131
4.1.9 Electrical connection of RPF(I) units..... 134
4.1.10 Electrical connection of KPI units..... 136
4.1.11 DX-Interface electrical wiring..... 137
4.1.12 Network system connection (CS-NET WEB)..... 139
4.1.13 Connection between units H-LINK and H-LINK II..... 140

4.2 Setting of DIP switches and RSW switches..... 141

4.2.1 Location of DIP switches and RSW switches..... 142
4.2.2 Functions of the DIP switches and RSW switches..... 143

4.3 Wiring diagrams for indoor units and complementary systems..... 150

4.3.1 Wiring diagrams for indoor units..... 150
4.3.2 Wiring diagrams for complementary systems..... 163

4.1 Unit electrical wiring and connection

4.1.1 Wiring and main switch selection

Minimum size of the power supply cable wires

NOTE

- ***Follow local code and regulations to select the installation cables.***
- ***The maximum current value is used to calculate the size of the cables in line with European Standard EN60 335-1. Use normal, flexible coated neoprene (polychloroprene) cables (code H05RN-F) with a diameter no less than that indicated in the table.***
- ***The size of the earth wire must be in line with local code IEC 245, no. 571.***
- ***Use a shielded twisted pair cable or shielded pair cable with a diameter of over 0.75 mm^2 (equivalent to KPEV-S) for the operation wiring between the outdoor and the indoor unit and for operation wiring between the indoor units.***
- ***Use a shielded twisted pair cable or shielded pair cable for communications between the indoor and outdoor units. Connect the shielding to the earthing screw in the indoor unit electrical box.***

If the power cables are connected in series, use the maximum current value and select the cables according to the following tables.

- For indoor units:

Model	Power supply	Maximum current (A)	Power supply cable size EN60 335-1	Transmitting cable size EN60 335-1
Indoor units (0.8-6.0) HP	1~ 230V 50Hz or 1~ 220-240V 50Hz	5.0	0.75 mm^2	0.75 mm^2
Indoor units (8.0-10.0) HP		10.0	1.5 mm^2	

- For KPI units:

Model	Power supply	Maximum current, (A)	Power supply cable size (mm^2)
Current I (A)	Cable size (mm^2)	Current I (A)	Cable size (mm^2)
KPI-(252-802)E2E	1~ 230V 50Hz	4	0.75
KPI-(1002-2002)E2E	1~ 230V 50Hz	8	1
KPI-(3002)H2E	1~ 230V 50Hz	12	1.5

Cable size in relation to current

NOTE

- ***Use shielded transmission cables between indoor and outdoor units.***
- ***Use normal, flexible coated neoprene (polychloroprene) cables (code H05RN-F) with a diameter no less than that indicated in the table.***
- ***If the current exceeds 63 A, do not connect the cables in series.***

Type of main switch

Select the main switch according to the following table:

Model	Power supply	Max. current (A)	Circuit breaker (A)	Earth leakage breaker (no. of poles/A/mA)
All indoor units(*)	1~ 230V 50Hz	5	6	2/40/30
KPI-(502/802)E2E		4	6	
KPI-(1002)E2E		8	10	
KPI-(1502/2002)E2E		8	16	
KPI-(3002)H2E		12	16	

(*) Except RPI-(8.0/10.0)FSN3E

4.1.2 Electrical connection of RCI units

Work prior to the electrical connection

1 Turn off the power supply switches before starting work and fit the appropriate locks and safety warnings.
2 Wait 5 minutes after turning off the power supply switches.
3 Check that the fans on the indoor and outdoor units are at a standstill before starting work.

NOTE

- ***The electrical power for the unit must involve a specific power line, with an exclusive power control switch and residual current breaker, installed in line with local or national safety regulations.***
- ***Check that the electrical power line has enough capacity to supply the unit. Its length, the cable diameter and their protection (sleeve or jacket) must be appropriate for the unit.***
- ***For further information, always consider the current regulations in the country where the unit is to be installed.***

CAUTION

- ***Risk of fire: cables must never touch the refrigerant pipes, printed circuit boards (PCB), sharp edges or electrical components inside the unit to avoid damaging them.***
- ***Loose connection terminals may lead to cable and terminal overheating. The unit may operate incorrectly, leading to a risk of fire. Check that the cables are firmly secured to the connection terminals.***

Electrical connection

Check that the power supply for the RCI indoor unit is 230 V. If not, replace the CN connectors on the TF transformers in the electrical box.

Make the connection between the indoor unit and the air panel.

NOTE

- ***To prevent the screws from falling from the terminal strip, do not remove them completely, hold onto the terminal and check that the screw is secure through the hole.***
- ***Use the following screws for the terminal strip:***
  - ***M4 screw for the power supply.***
  - ***M3.5 screw for the communication line.***

Follow the steps below to connect the remote control cable or the optional extension wire:

1 Pass the cable through the knockout hole in the cabinet.
2 Connect the cable to terminals A and B of the terminal strip (TB1).
3 Tighten the screw on terminals A and B.
4 Check that the cables are correctly secured.

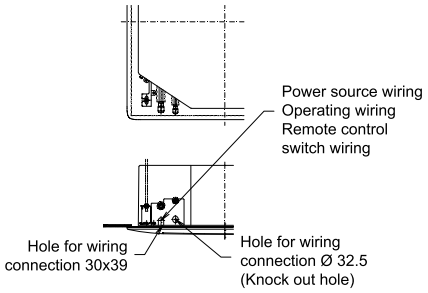

Follow the steps below to connect the power cables to the terminal strip (TB1):

NOTE

- ***To connect a power supply to neutral, connect the cables to terminals L1 and N on the terminal strip (TB1).***
- ***To connect a power supply without neutral: make the connection to terminals L1 and L2 on the terminal strip (TB1).***

1 Where necessary, loosen the screws on terminals L1 and N or L1 and L2, as applicable, on the terminal strip (TB1).
2 Connect the power cables to terminals L1 and N or L1 and L2, as applicable.
3 Tighten the screws on terminals L1 and N or L1 and L2, as applicable.
4 Check that the cables are correctly secured.

Follow the steps below to connect the communication cables between the outdoor and indoor unit to the terminal strip (TB1):

1 Where necessary, loosen the screws on terminals 1 and 2 on the terminal strip (TB1).
2 Connect the communication cables to terminals 1 and 2.
3 Tighten the screw on terminals 1 and 2.
4 Check that the cables are correctly secured.

Follow the steps below to connect the earthing cables to the earthing connection in the electrical box:

1 Where necessary, loosen the screw on the earthing connection in the electrical box.
2 Connect the shielded part of the power supply earth wire to the earth connection.
3 Connect the shielded part of the signal earth wire to the earth connection.
4 Tighten the screw on the earthing connection in the electrical box.
5 Check that the cables are correctly secured.

Part	No.
1	Electrical box
2	Stop (metal)
3	Power supply, signal and remote control wiring
4	Screw
5	Printed circuit board (PCB)
6	Terminal strip (TB2)
7	Earthing screw
8	Terminal strip (TB1)
9	Printed circuit board (PCB)
10	Power supply wiring and signal wiring between the outdoor and indoor unit
11	Remote control wiring
12	Communication wiring between the indoor and outdoor unit

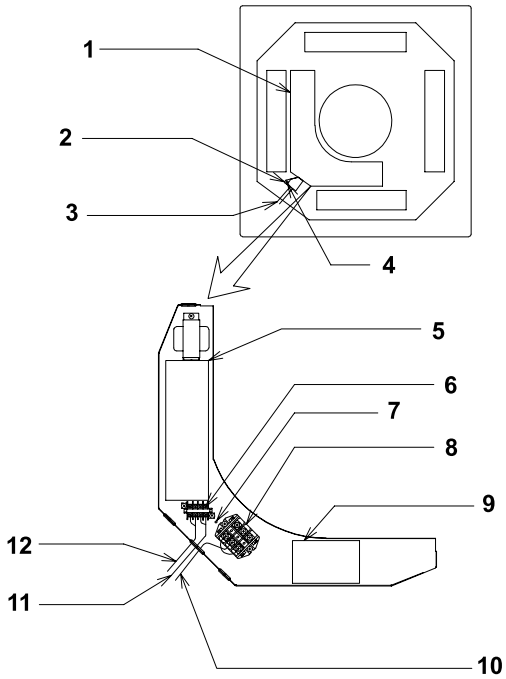

Part	No.
1	Tie
2	Communication wiring between the indoor and outdoor units and between indoor units
3	Operation control wiring (for group operations with remote control only)
4	Remote control wiring

Firmly secure the cables using a tie inside the electrical box.

Cover the cables and the hole using a sealant to protect them from condensation and insects.

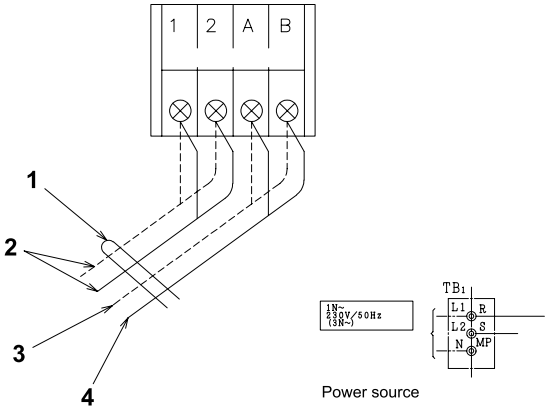

Test runs

CAUTION

- ***Be careful during the test runs, as some of the safety functions remain disabled: the units operate for two hours without switching off via the thermostat. The three-minute compressor protection is not enabled during the test.***
- ***Secure the rubber bushes to the panel using adhesive when the outdoor unit ducts are not used.***
- ***The compressor remains at a standstill during forced stoppage.***

4.1.3 Electrical connection of RCIM units

Work prior to the electrical connection

1 Turn off the power supply switches before starting work and fit the appropriate locks and safety warnings.
2 Wait 5 minutes after turning off the power supply switches.
3 Check that the fans on the indoor and outdoor units are at a standstill before starting work.

NOTE

The electrical power for the unit must involve a specific power line, with an exclusive power control switch and residual current breaker, installed in line with local or national safety regulations.

Check that the electrical power line has enough capacity to supply the unit. Its length, the cable diameter and their protection (sleeve or jacket) must be appropriate for the unit.

For further information, always consider the current regulations in the country where the unit is to be installed.

CAUTION

Risk of fire: cables must never touch the refrigerant pipes, printed circuit boards (PCB), sharp edges or electrical components inside the unit to avoid damaging them.

Loose connection terminals may lead to cable and terminal overheating. The unit may operate incorrectly, leading to a risk of fire. Check that the cables are firmly secured to the connection terminals.

Electrical connection

Check that the power supply for the RCIM indoor unit is 240 V. If not, replace connectors CN27 and CN28 of the TF transformers in the electrical box.

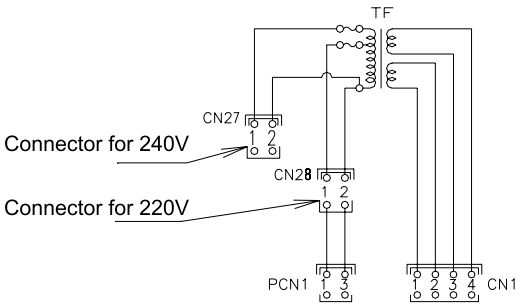

Make the connection between the indoor unit and the air panel.

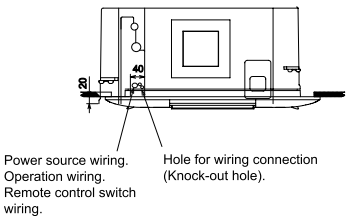

NOTE

- ***To prevent the screws from falling from the terminal box, do not remove them completely, hold onto the terminal and check that the screw is secure through the hole in the terminal.***
- ***Use the following screws for the terminal box:***
  - ***M4 screw for the power supply.***
  - ***M3.5 screw for the operating line.***

Follow the steps below to connect the remote control cable or the optional extension wire:

1 Pass the cable through the knockout hole in the cabinet.
2 Connect the cable to terminals A and B of the terminal strip (TB1).
3 Tighten the screw on terminals A and B.
4 Check that the cables are correctly secured.

Follow the steps below to connect the power cables to the terminal strip (TB1):

CAUTION

- ***To connect a power supply with neutral, connect the cables to terminals L1 and N on the terminal strip (TB1).***
- ***To connect a power supply without neutral: make the connection to terminals L1 and L2 on the terminal strip (TB1).***

1 Where necessary, loosen the screws on terminals L1 and N or L1 and L2, as applicable, on the terminal strip (TB1).
2 Connect the power cables to terminals L1 and N or L1 and L2, as applicable.
3 Tighten the screws on terminals L1 and N or L1 and L2, as applicable.
4 Check that the cables are correctly secured.

Follow the steps below to connect the communication cables between the outdoor and indoor unit to the terminal strip (TB1):

1 Where necessary, loosen the screws on terminals 1 and 2 on the terminal strip (TB1).
2 Connect the communication cables to terminals 1 and 2.
3 Tighten the screw on terminals 1 and 2.
4 Check that the cables are correctly secured.

Follow the steps below to connect the earth wire to the earth connection in the electrical box:

1 Where necessary, loosen the screw on the earthing connection in the electrical box.
2 Connect the shielded part of the power supply earth wire and the signal wiring earth wire to the earth connection.
3 Tighten the screw on the earthing connection in the electrical box.
4 Check that the shielded part of the earthing cables are correctly secured.

Firmly secure the cables using a tie inside the electrical box.

Cover the cables and the hole using a sealant to protect them from condensation and insects.

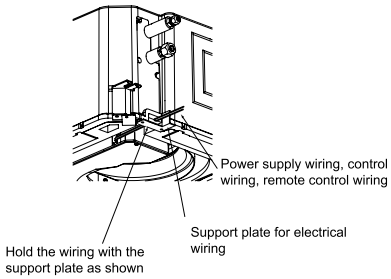

Nº	Part
1	Terminal box (TB1)
2	Terminal box (TB2)
3	Outlet air thermistor
4	Connector for the swing louver motor
5	Printed circuit board (PCB)
6	Earthing screw
7	Remote control wiring
8	Communication wiring
9	Power wiring
10	Tie

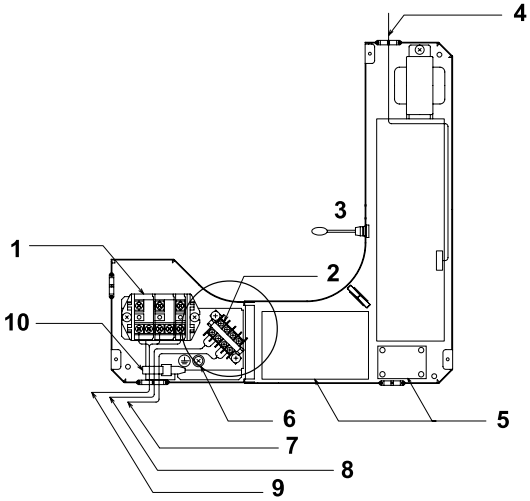

Nº	Part
1	Tie
2	Communication wiring between the indoor and outdoor units and between indoor units
3	Operating control wiring. In the case of group operations using a remote control
4	Remote control wiring

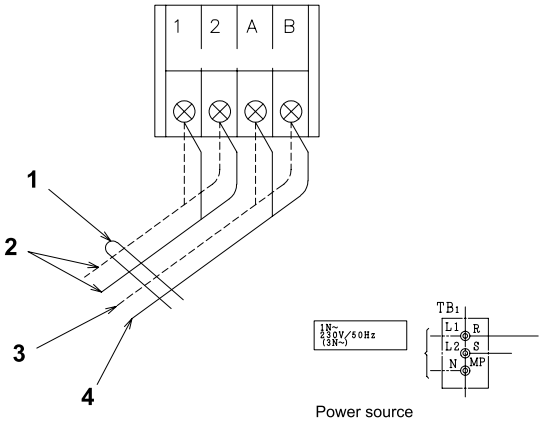

Test runs

CAUTION

- ***Be careful during the test runs, as some of the safety functions remain disabled: the units operate for two hours without switching off via the thermostat. The three-minute compressor protection is not enabled during the test.***
- ***Secure the rubber bushes to the panel using adhesive when the outdoor unit ducts are not used.***
- ***The compressor remains at a standstill during forced stoppage.***

4.1.4 Electrical connection of RCD units

Work prior to the electrical connection

1 Turn off the power supply switches before starting work and fit the appropriate locks and safety warnings.
2 Wait 5 minutes after turning off the power supply switches.
3 Check that the fans on the indoor and outdoor units are at a standstill before starting work.

NOTE

- ***The electrical power for the unit must involve a specific power line, with an exclusive power control switch and residual current breaker, installed in line with local or national safety regulations.***
- ***Check that the electrical power line has enough capacity to supply the unit. Its length, the cable diameter and their protection (sleeve or jacket) must be appropriate for the unit.***
- ***For further information, always consider the current regulations in the country where the unit is to be installed.***

CAUTION

- ***Risk of fire: cables must never touch the refrigerant pipes, printed circuit boards (PCB), sharp edges or electrical components inside the unit to avoid damaging them.***
- ***Loose connection terminals may lead to cable and terminal overheating. The unit may operate incorrectly, leading to a risk of fire. Check that the cables are firmly secured to the connection terminals.***

Electrical connection

Check that the power supply for the RCD indoor unit is 240 V. If not, replace connectors CN27 and CN28 on the TF transformers in the electrical box.

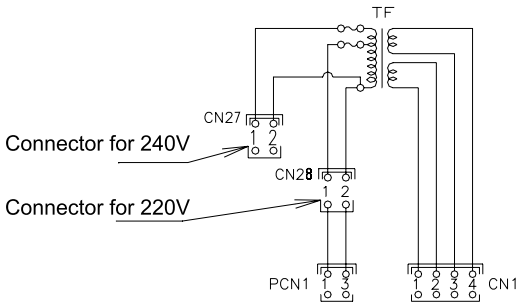

Follow the steps below to connect the remote control cable or the optional extension wire:
1 Pass the cable through the knockout hole in the cabinet.
2 Connect the cable to terminals A and B of the terminal strip (TB2).
3 Tighten the screw on terminals A and B.
4 Check that the cables are correctly secured.

Follow the steps below to connect the power cables to the terminal strip (TB1):
1 Where necessary, loosen the screws on terminals L1 and N on the terminal strip (TB1)
2 Connect the power cables to terminals L1 and N.
3 Tighten the screws on terminals L1 and N.
4 Check that the cables are correctly secured.

Follow the steps below to connect the communication cables between the outdoor and indoor unit to the terminal strip (TB2):
1 Where necessary, loosen the screws on terminals 1 and 2 on the terminal strip (TB2).
2 Connect the communication cables to terminals 1 and 2.
3 Tighten the screw on terminals 1 and 2.
4 Check that the cables are correctly secured.

Nº	Part
1	Connector for the swing louver motor
2	Fan motor connector
3	Terminal strip (TB2)
4	Terminal strip (TB1)
5	Wiring
6	Power wiring

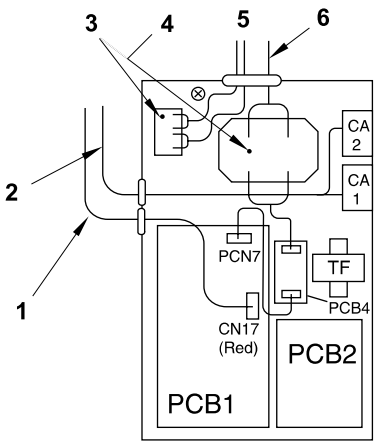

Follow the steps below to connect the earth wire to the earth connection in the electrical box:

1 Where necessary, loosen the screw on the earthing connection in the electrical box.
2 Connect the shielded part of the power supply earth wire and the signal wiring earth wire to the earth connection.
3 Tighten the screw on the earthing connection in the electrical box.
4 Check that the shielded part of the earthing cables are correctly secured.

Nº	Part
1	Tie
2	Communication wiring between the indoor and outdoor units and between indoor units
3	Operating control wiring. In the case of group operations using a remote control
4	Remote control wiring

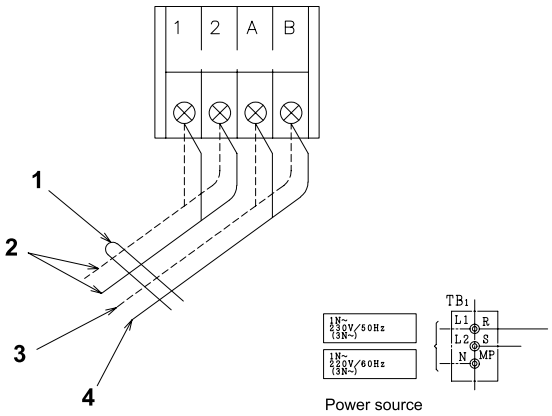

Test runs

CAUTION

- ***Be careful during the test runs, as some of the safety functions remain disabled: the units operate for two hours without switching off via the thermostat. The three-minute compressor protection is not enabled during the test.***
- ***Secure the rubber bushes to the panel using adhesive when the outdoor unit ducts are not used.***
- ***The compressor remains at a standstill during forced stoppage.***

4.1.5 Electrical connection of RPC units

Work prior to the electrical connection

1 Turn off the power supply switches before starting work and fit the appropriate locks and safety warnings.
2 Wait 5 minutes after turning off the power supply switches.
3 Check that the fans on the indoor and outdoor units are at a standstill before starting work.

NOTE

- ***The electrical power for the unit must involve a specific power line, with an exclusive power control switch and residual current breaker, installed in line with local or national safety regulations.***
- ***Check that the electrical power line has enough capacity to supply the unit. Its length, the cable diameter and their protection (sleeve or jacket) must be appropriate for the unit.***
- ***For further information, always consider the current regulations in the country where the unit is to be installed.***

CAUTION

- ***Risk of fire: cables must never touch the refrigerant pipes, printed circuit boards (PCB), sharp edges or electrical components inside the unit to avoid damaging them.***
- ***Loose connection terminals may lead to cable and terminal overheating. The unit may operate incorrectly, leading to a risk of fire. Check that the cables are firmly secured to the connection terminals.***

Electrical connection

Check that the power supply for the RPC indoor unit is 230 V. If not, replace connectors CN on the TF transformers in the electrical box.

NOTE

- ***To prevent the screws from falling from the terminal box, do not remove them completely, hold onto the terminal and check that the screw is secure through the hole in the terminal.***
- ***Use the following screws for the terminal box:***
  - ***M4 screw for the power supply.***
  - ***M3.5 screw for the operating line.***

Follow the steps below to connect the remote control cable or the optional extension wire:
1 Pass the cable through the knockout hole in the cabinet.
2 Connect the cable to terminals A and B of the terminal strip (TB).
3 Tighten the screw on terminals A and B.
4 Check that the cables are correctly secured.

Follow the steps below to connect the power cables to the terminal strip (TB):
1 Where necessary, loosen the screws on terminals L1 and N on the terminal strip (TB).
2 Connect the power cables to terminals L1 and N.
3 Tighten the screws on terminals L1 and N.
4 Check that the cables are correctly secured.

Follow the steps below to connect the communication cables between the outdoor and indoor unit to the terminal strip (TB):
1 Where necessary, loosen the screws on terminals 1 and 2 on the terminal strip (TB).
2 Connect the communication cables to terminals 1 and 2.
3 Tighten the screw on terminals 1 and 2.
4 Check that the cables are correctly secured.

Follow the steps below to connect the earth wire to the earth connection in the electrical box:
1 Where necessary, loosen the screw on the earthing connection in the electrical box.
2 Connect the shielded part of the power supply earth wire and the signal wiring earth wire to the earth connection.
3 Tighten the screw on the earthing connection in the electrical box.
4 Check that the shielded part of the earthing cables are correctly secured.

Nº	Part
1	Electrical box
2	Tie
3	Die-cut wiring hole
4	Grille
5	Remote control wiring (optional)
6	Communication wiring
7	Power wiring

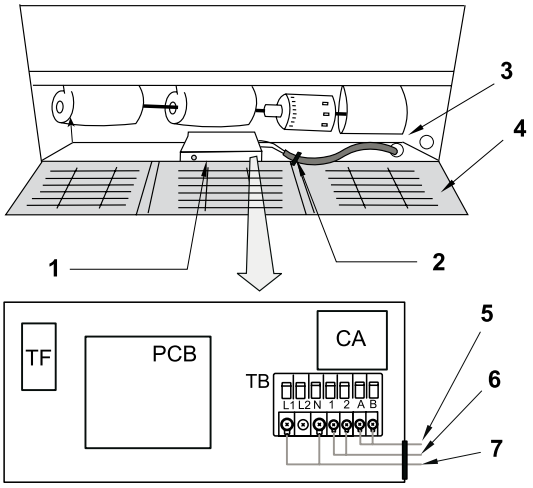

Test runs

CAUTION

- ***Be careful during the test runs, as some of the safety functions remain disabled: the units operate for two hours without switching off via the thermostat. The three-minute compressor protection is not enabled during the test.***
- ***Secure the rubber bushes to the panel using adhesive when the outdoor unit ducts are not used.***
- ***The compressor remains at a standstill during forced stoppage.***

4.1.6 Electrical connection of RPI units

Work prior to the electrical connection

1 Turn off the power supply switches before starting work and fit the appropriate locks and safety warnings.
2 Wait 5 minutes after turning off the power supply switches.
3 Check that the fans on the indoor and outdoor units are at a standstill before starting work.

NOTE

- ***The electrical power for the unit must involve a specific power line, with an exclusive power control switch and residual current breaker, installed in line with local or national safety regulations.***
- ***Check that the electrical power line has enough capacity to supply the unit. Its length, the cable diameter and their protection (sleeve or jacket) must be appropriate for the unit.***
- ***For further information, always consider the current regulations in the country where the unit is to be installed.***

CAUTION

- ***Risk of fire: cables must never touch the refrigerant pipes, printed circuit boards (PCB), sharp edges or electrical components inside the unit to avoid damaging them.***
- ***Loose connection terminals may lead to cable and terminal overheating. The unit may operate incorrectly, leading to a risk of fire. Check that the cables are firmly secured to the connection terminals.***

Electrical connection

Check that the power supply for the RPI indoor unit is 230 V. If not, replace connectors CN on the TF transformers in the electrical box.

NOTE

The service panel for the indoor unit fan motor is at the bottom of the unit and the electrical box service panel is on the right-hand side.

Open the service panel.

Cut the centre of the rubber bushing in the wiring connection hole.

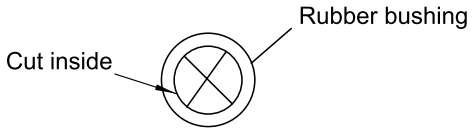

NOTE

- ***To prevent the screws from falling from the terminal box, do not remove them completely, hold onto the terminal and check that the screw is secure through the hole in the terminal.***
- ***Use the following screws for the terminal box:***
  - ***M4 screw for the power supply.***
  - ***M3.5 screw for the operating line.***

Follow the steps below to connect the remote control cable or the optional extension wire:

1. Pass the cable through the knockout hole in the cabinet.
2. Connect the cable to terminals A and B of the terminal strip (TB).
3. Tighten the screw on terminals A and B.
4. Check that the cables are correctly secured.

Follow the steps below to connect the power cables to the terminal strip (TB):

1. Where necessary, loosen the screws on terminals L1 and N on the terminal strip (TB).
2. Connect the power cables to terminals L1 and N.
3. Tighten the screws on terminals L1 and N.
4. Check that the cables are correctly secured.

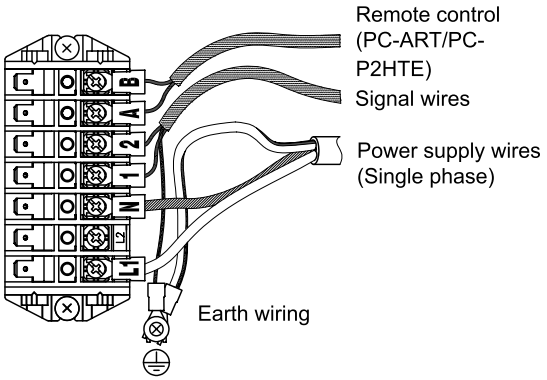

Follow the steps below to connect the communication cables between the outdoor and indoor unit to the terminal strip (TB):

1. Where necessary, loosen the screws on terminals 1 and 2 on the terminal strip (TB).
2. Connect the communication cables to terminals 1 and 2.
3. Tighten the screw on terminals 1 and 2.
4. Check that the cables are correctly secured.

Follow the steps below to connect the earth wire to the earth connection in the electrical box:

1. Where necessary, loosen the screw on the earthing connection in the electrical box.
2. Connect the shielded part of the power supply earth wire and the signal wiring earth wire to the earth connection.
3. Tighten the screw on the earthing connection in the electrical box.
4. Check that the shielded part of the earthing cables are correctly secured.

Firmly secure the cables using a tie inside the electrical box.

RPI-(0.8-1.5)FSN2E Terminal board location

Cover the cables and the hole using a sealant to protect them from condensation and insects.

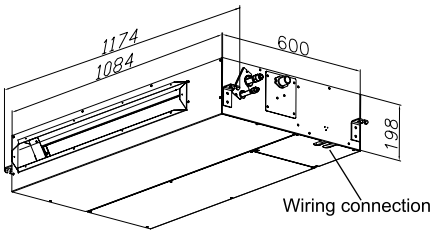

Nº	Part
PCB	Printed circuit board.
TF	Transformer.
TB	Terminal strip.

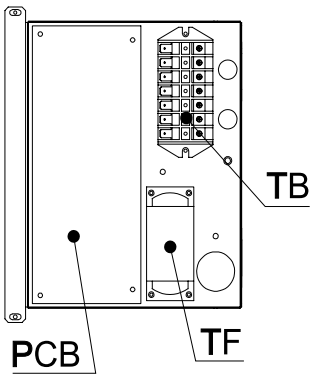

RPI-2~6

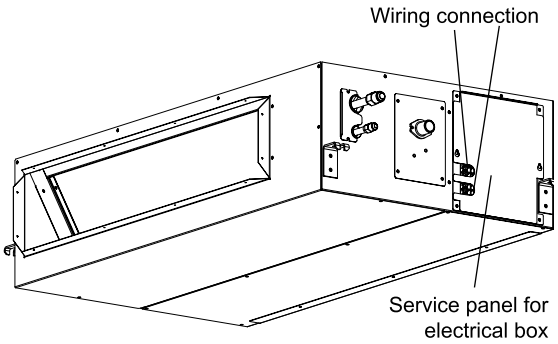

RPI-(2.0-6.0)FSN3E. Terminal board connections

Nº	Part
PCB1	Printed circuit board.
TF	Transformer.
TB	Terminal strip.

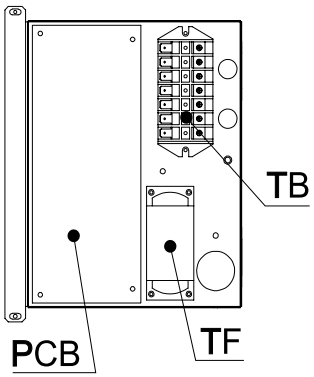

RPI-3.0FSN3E static pressure settings for very short ducts

The fan motor in RPI-3.0-FSN3E units can be configured in two different ways:

- Without the fan motor adapter (high static pressure). Factory setting.
- Connecting the fan motor adapter (CN22-CN24) (low static pressure). This configuration is only for very short ducts.

The new configuration allow an extralow speed (v5) by using a factory supplied connector which allows to work with less external static pressure and less air flow in cases of very short duct, reducing the noise.

For fan performance curve at extralow speed (v5) information see the Technical Catalogue.

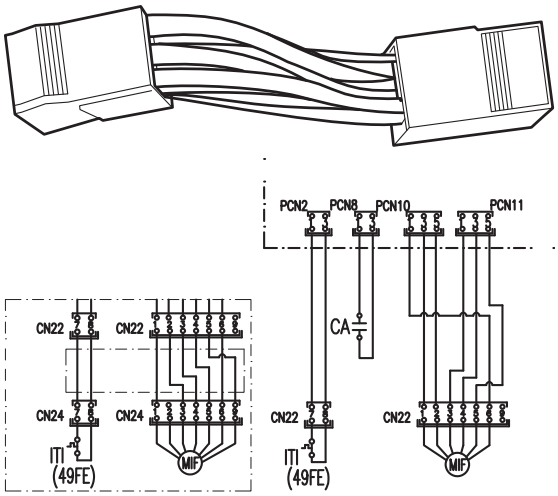

RPI-8~10

RPI-(8.0/10.0)FSN3E Terminal board connections

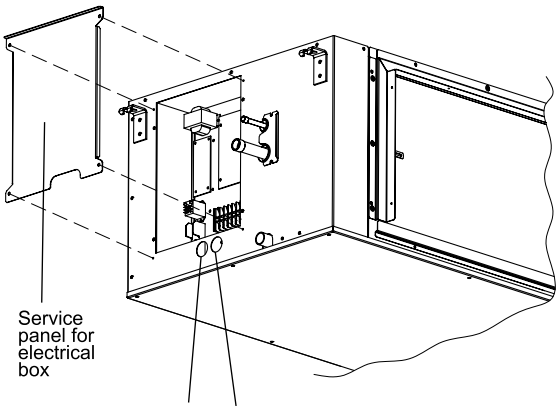

Nº	Part
PCB1	Printed circuit board.
PCB2	Printed circuit board.
TF	Transformer.
TB3	Terminal strip.
FUSE	Fuse

RPI-8~10

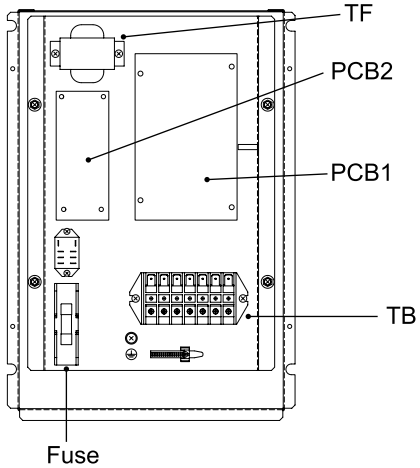

Test runs

CAUTION

- ***Be careful during the test runs, as some of the safety functions remain disabled: the units operate for two hours without switching off via the thermostat. The three-minute compressor protection is not enabled during the test.***
- ***Secure the rubber bushes to the panel using adhesive when the outdoor unit ducts are not used.***
- ***The compressor remains at a standstill during forced stoppage.***

RPI-(8.0/10.0)FSN3E static pressure setting

RPI units have been provided by two Static Pressure levels regulation depending on the installation requirements. High Static Pressure and Low Static Pressure (Std. Factory Setting) connectors are available into the Electrical Box.

Setting of Static Pressure shall be made by changing the Fan Unit connector.

- A: connector CN24 LSP (Low Static Pressure); (factory supplied).
- B: connector CN25 HSP (High Static Pressure).

To do so, simply replace the motor power connector identified as CN24 (factory-connected for operation at low static pressure, LSP) with the high-pressure connector CN25 (operation at high static pressure, HSP).

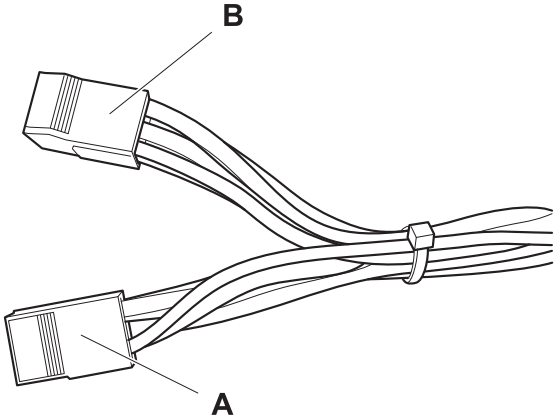

4.1.7 Electrical connection of RPIM units

Work prior to the electrical connection

1. Turn off the power supply switches before starting work and fit the appropriate locks and safety warnings.
2. Wait 5 minutes after turning off the power supply switches.
3. Check that the fans on the indoor and outdoor units are at a standstill before starting work.

NOTE

- ***The electrical power for the unit must involve a specific power line, with an exclusive power control switch and residual current breaker, installed in line with local or national safety regulations.***
- ***Check that the electrical power line has enough capacity to supply the unit. Its length, the cable diameter and their protection (sleeve or jacket) must be appropriate for the unit.***
- ***For further information, always consider the current regulations in the country where the unit is to be installed.***

CAUTION

- ***Risk of fire: cables must never touch the refrigerant pipes, printed circuit boards (PCB), sharp edges or electrical components inside the unit to avoid damaging them.***
- ***Loose connection terminals may lead to cable and terminal overheating. The unit may operate incorrectly, leading to a risk of fire. Check that the cables are firmly secured to the connection terminals.***

Electrical connection

Check that the power supply for the RPI indoor unit is 230 V. If not, replace connectors CN on the TF transformers in the electrical box.

NOTE

The service access panel for the indoor unit fan motor is at the bottom of the unit.

Remove the service access panel.

Cut the centre of the rubber bushing in the wiring connection hole.

NOTE

- ***To prevent the screws from falling from the terminal box, do not remove them completely, hold onto the terminal and check that the screw is secure through the hole in the terminal.***
- ***Use the following screws for the terminal box:***
  - ***M4 screw for the power supply.***
  - ***M3.5 screw for the operating line.***

Follow the steps below to connect the remote control cable or the optional extension wire:

1 Pass the cable through the knockout hole in the cabinet.
2 Connect the cable to terminals A and B of the terminal strip (TB1).
3 Tighten the screw on terminals A and B.
4 Check that the cables are correctly secured.

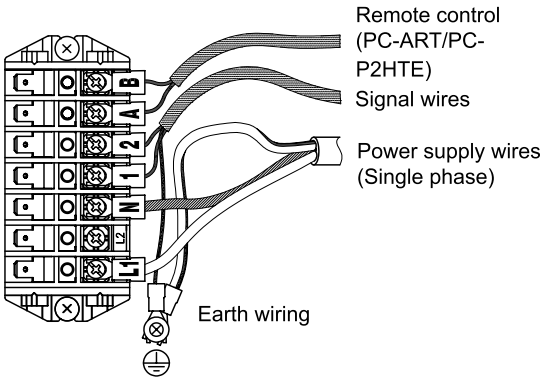

Follow the steps below to connect the power cables to the terminal strip (TB):

1 Where necessary, loosen the screws on terminals L1 and N on the terminal strip (TB).
2 Connect the power cables to terminals L1 and N.
3 Tighten the screws on terminals L1 and N.
4 Check that the cables are correctly secured.

Follow the steps below to connect the communication cables between the outdoor and indoor unit to the terminal strip (TB):

1 Where necessary, loosen the screws on terminals 1 and 2 on the terminal strip (TB).
2 Connect the communication cables to terminals 1 and 2.
3 Tighten the screw on terminals 1 and 2.
4 Check that the cables are correctly secured.

Follow the steps below to connect the earth wire to the earth connection in the electrical box:

1 Where necessary, loosen the screw on the earthing connection in the electrical box.
2 Connect the shielded part of the power supply earth wire and the signal wiring earth wire to the earth connection.
3 Tighten the screw on the earthing connection in the electrical box.
4 Check that the shielded part of the earthing cables are correctly secured.

Firmly secure the cables using a tie inside the electrical box.

Cover the cables and the hole using a sealant to protect them from condensation and insects.

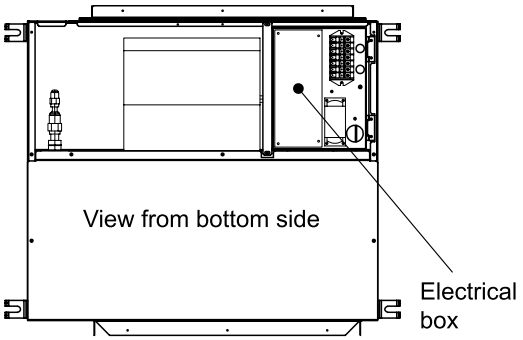

Nº	Part
PCB	Printed circuit board.
TF	Transformer.
TB	Terminal strip.

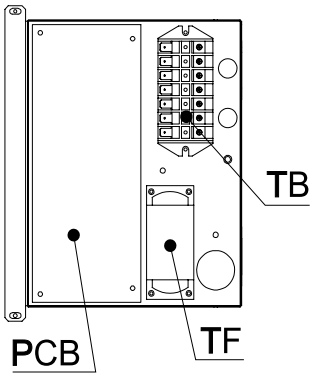

Test runs

CAUTION

- ***Be careful during the test runs, as some of the safety functions remain disabled: the units operate for two hours without switching off via the thermostat. The three-minute compressor protection is not enabled during the test.***
- ***Secure the rubber bushes to the panel using adhesive when the outdoor unit ducts are not used.***
- ***The compressor remains at a standstill during forced stoppage.***

4.1.8 Electrical connection of RPK units

Work prior to the electrical connection

1 Turn off the power supply switches before starting work and fit the appropriate locks and safety warnings.
2 Wait 5 minutes after turning off the power supply switches.
3 Check that the fans on the indoor and outdoor units are at a standstill before starting work.

NOTE

- ***The electrical power for the unit must involve a specific power line, with an exclusive power control switch and residual current breaker, installed in line with local or national safety regulations.***
- ***Check that the electrical power line has enough capacity to supply the unit. Its length, the cable diameter and their protection (sleeve or jacket) must be appropriate for the unit.***
- ***For further information, always consider the current regulations in the country where the unit is to be installed.***

CAUTION

- ***Risk of fire: cables must never touch the refrigerant pipes, printed circuit boards (PCB), sharp edges or electrical components inside the unit to avoid damaging them.***
- ***Loose connection terminals may lead to cable and terminal overheating. The unit may operate incorrectly, leading to a risk of fire. Check that the cables are firmly secured to the connection terminals.***

Electrical connection

Check that the power supply for the RPIM indoor unit is 240 V. If not, replace connectors CN27 and CN28 on the TF transformers in the electrical box.

NOTE

- ***To prevent the screws from falling from the terminal box, do not remove them completely, hold onto the terminal and check that the screw is secure through the hole in the terminal.***
- ***Use the following screws for the terminal box:***
  - ***M4 screw for the power supply.***
  - ***M3.5 screw for the operating line.***

Follow the steps below depending on the type of communication to connect the remote control:

- Connection for wireless remote controls:
  1 Turn the sliding changeover switch (SW1) to the wireless position.
- Wiring connection for remote controls or optional extension wire:

NOTE

In installations with double or triple combinations: if the H-LINK communication network wiring between indoor units is incorrect, only unit 1 will start without issuing alarms during the start-up procedure.

1 Prior wiring disconnection for correct system operations:
- If the indoor unit is RPK-(2.0)FSN2M disconnect the wiring to connector CN25.
- If the indoor unit is RPK-(2.5-4.0)FSN2M disconnect the wiring to connector CN12.

2 Wiring connection for PC-ART remote control:
- Connect the remote control cable to terminals A and B of the terminal strip (TB2).
- Tighten the screw on terminals A and B.
- Check that the cables are correctly secured.
- Turn the sliding changeover switch (SW1) to the wiring position.

Follow the steps below to connect the power cables to the terminal strip (TB1):

1 Where necessary, loosen the screws on terminals L1 and N on the terminal strip (TB1)
2 Connect the power cables to terminals L1 and N.
3 Tighten the screws on terminals L1 and N.
4 Check that the cables are correctly secured.

Follow the steps below to connect the communication cables between the outdoor and indoor unit to the terminal strip (TB2):

1 Where necessary, loosen the screws on terminals 1 and 2 on the terminal strip (TB2).
2 Connect the communication cables to terminals 1 and 2.
3 Tighten the screw on terminals 1 and 2.
4 Check that the cables are correctly secured.

Follow the steps below to connect the earth wire to the earth connection in the electrical box:

1 Where necessary, loosen the screw on the earthing connection in the electrical box.
2 Connect the shielded part of the power supply earth wire and the signal wiring earth wire to the earth connection.
3 Tighten the screw on the earthing connection in the electrical box.
4 Check that the shielded part of the earthing cables are correctly secured.

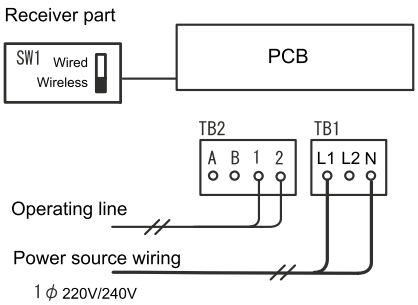

Connection with remote control:

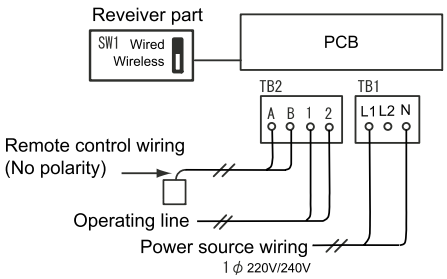

RPK-(1.0/1.5)FSN(H)2M terminal board connections

Nº	Part
1	Terminal strip (TB2)
2	Cable tie
3	Earthing screw
4	Electrical box cover
5	Printed circuit board (PCB) of the receiver
6	Terminal strip (TB1)
7	Screw on right side of the electrical box (to open and connect the power wiring and the remote control wiring between the indoor and outdoor unit).

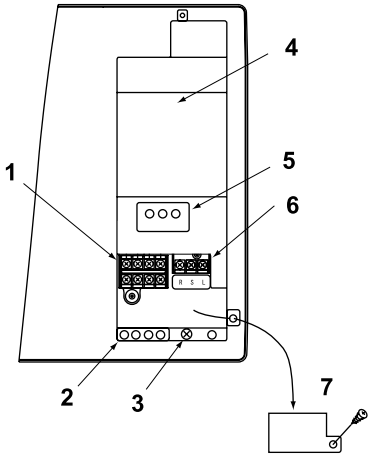

RPK-2.0FSN2M terminal board connections

Nº	Part
1	Electrical box
2	Connector (CN13)
3	Remote control wiring
4	Terminal strip (TB2)
5	Cable secured with the tie
6	Hole for the electrical box
7	Operating line
8	Hole for gas pipe and wiring installation
9	Electricity supply line
10	Terminal strip (TB1)

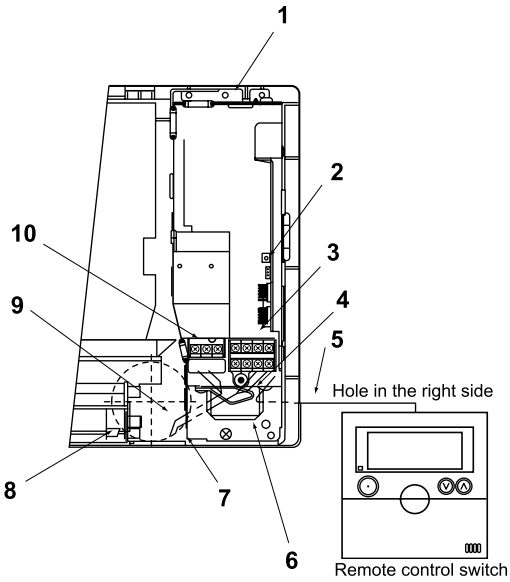

RPK-(2.5-4.0)FSN2M terminal board connections

Nº	Part
1	Terminal strip (TB1)
2	Terminal strip (TB2)
3	Cable secured with the tie
4	Earthing screw

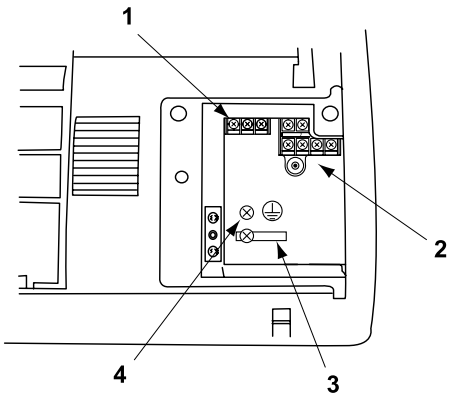

Test runs

CAUTION

- ***Be careful during the test runs, as some of the safety functions remain disabled: the units operate for two hours without switching off via the thermostat. The three-minute compressor protection is not enabled during the test.***
- ***Secure the rubber bushes to the panel using adhesive when the outdoor unit ducts are not used.***
- ***The compressor remains at a standstill during forced stoppage.***

4.1.9 Electrical connection of RPF(I) units

Work prior to the electrical connection

1 Turn off the power supply switches before starting work and fit the appropriate locks and safety warnings.
2 Wait 5 minutes after turning off the power supply switches.
3 Check that the fans on the indoor and outdoor units are at a standstill before starting work.

NOTE

- ***The electrical power for the unit must involve a specific power line, with an exclusive power control switch and residual current breaker, installed in line with local or national safety regulations.***
- ***Check that the electrical power line has enough capacity to supply the unit. Its length, the cable diameter and their protection (sleeve or jacket) must be appropriate for the unit.***
- ***For further information, always consider the current regulations in the country where the unit is to be installed.***

CAUTION

- ***Risk of fire: cables must never touch the refrigerant pipes, printed circuit boards (PCB), sharp edges or electrical components inside the unit to avoid damaging them.***
- ***Loose connection terminals may lead to cable and terminal overheating. The unit may operate incorrectly, leading to a risk of fire. Check that the cables are firmly secured to the connection terminals.***

Electrical connection

Check that the power supply for the RPF/RPFI indoor unit is 230 V. If not, replace connectors CN on the TF transformers in the electrical box.

NOTE

For RPF units, the correct wiring is connected from the rear left side.

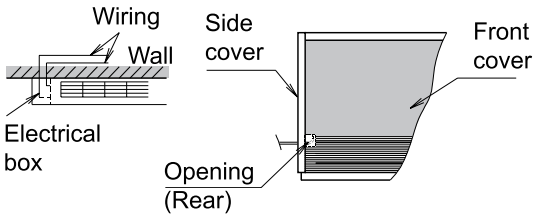

NOTE

For RPFI units, the correct wiring is connected from the rear right side.

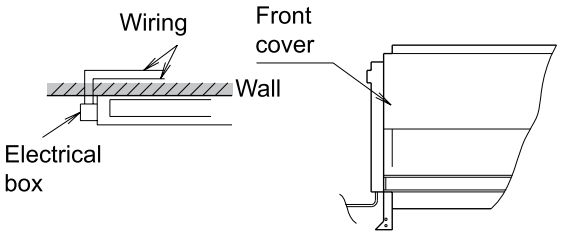

Open the front and side panels.

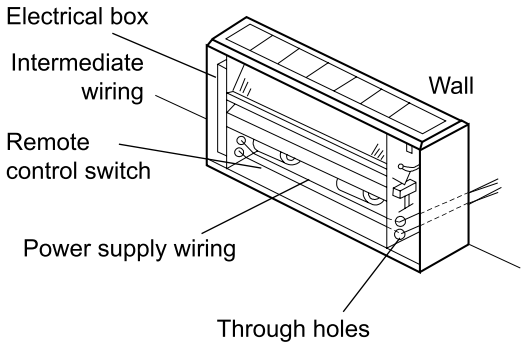

NOTE

- ***To prevent the screws from falling from the terminal box, do not remove them completely, hold onto the terminal and check that the screw is secure through the hole in the terminal.***
- ***Use the following screws for the terminal box:***
  - ***M4 screw for the power supply.***
  - ***M3.5 screw for the communication line.***

Nº	Part
PCB	Printed circuit board.
TF	Transformer.
TB	Terminal box.
CA	Capacitor.

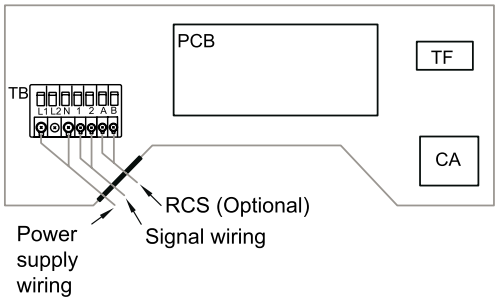

Follow the steps below to connect the cable of the remote control (PC-ART/PC-P2HTE) or the optional extension wire:

1 Pass the cable through the knockout hole in the cabinet.
2 Connect the cable to terminals A and B in the electrical box.
3 Tighten the screw on terminals A and B in the electrical box.
4 Check that the cables are correctly secured.

Follow the steps below to connect the power cables to the power terminals in the electrical box:

1 Where necessary, loosen the screws on the power terminals in the electrical box.
2 Connect power cables L1 and N to the power terminals in the electrical box.
3 Tighten the screws on the power terminals in the electrical box.
4 Check that the power cables are correctly secured.

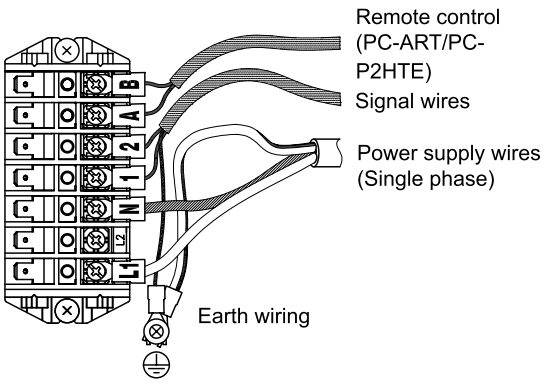

Follow the steps below to connect the communication cables between the outdoor and indoor unit to the terminals in the electrical box:

1 Where necessary, loosen the screws on the communication terminals in the electrical box.
2 Connect the communication cables to communication terminals 1 and 2 in the electrical box.
3 Tighten the screws on the communication terminals in the electrical box.
4 Check that the communication cables are correctly secured.

Follow the steps below to connect the earth wire to the earth terminal in the electrical box:

1 Where necessary, loosen the screw on the earthing terminal in the electrical box.
2 Connect the shielded part of the power supply and signal wiring earthing cables to the earthing terminal.
3 Tighten the screw on the earth terminal in the electrical box.
4 Check that the shielded part of the earthing cables are correctly secured.

Test runs

CAUTION

- ***Be careful during the test runs, as some of the safety functions remain disabled: the units operate for two hours without switching off via the thermostat. The three-minute compressor protection is not enabled during the test.***
- ***Secure the rubber bushes to the panel using adhesive when the outdoor unit ducts are not used.***
- ***The compressor remains at a standstill during forced stoppage.***

4.1.10 Electrical connection of KPI units

Work prior to the electrical connection

1 Turn off the power supply switches before starting work and fit the appropriate locks and safety warnings.
2 Wait 5 minutes after turning off the power supply switches.
3 Check that the fans on the indoor and outdoor units are at a standstill before starting work.

NOTE

- ***The electrical power for the unit must involve a specific power line, with an exclusive power control switch and residual current breaker, installed in line with local or national safety regulations.***
- ***Check that the electrical power line has enough capacity to supply the unit. Its length, the cable diameter and their protection (sleeve or jacket) must be appropriate for the unit.***
- ***For further information, always consider the current regulations in the country where the unit is to be installed.***

CAUTION

- ***Risk of fire: cables must never touch the refrigerant pipes, printed circuit boards (PCB), sharp edges or electrical components inside the unit to avoid damaging them.***
- ***Loose connection terminals may lead to cable and terminal overheating. The unit may operate incorrectly, leading to a risk of fire. Check that the cables are firmly secured to the connection terminals.***

Electrical connection

Cut the centre of the rubber bushing in the wiring connection knockout hole.

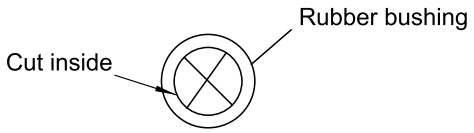

Follow the steps below to connect the remote control cable or the optional extension wire:

1 Pass the cable through the knockout hole in the cabinet.
2 Connect the cable to the terminals on the printed circuit board (PCB) located inside the electrical box.

3 Tighten the screw on terminals A and B in the electrical box.
4 Check that the cables are correctly secured.

CAUTION

If the power cables are to be connected in series, check that the current is below 50 A.

Follow the steps below to connect the power cables to the power terminals in the electrical box:
1 Where necessary, loosen the screws on the power terminals in the electrical box.
2 Connect the power cables to the power terminals in the electrical box.
3 Tighten the screws on the power terminals in the electrical box.
4 Check that the power cables are correctly secured.

Follow the steps below to connect the earth wire to the earth terminal in the electrical box:
1 Where necessary, loosen the screw on the earthing terminal in the electrical box.
2 Connect the shielded part of the earth wire to the earth terminal.
3 Tighten the screw on the earth terminal in the electrical box.
4 Check that the shielded part of the earthing cables are correctly secured.

Firmly secure the cables using a tie inside the electrical box.
Cover the cables and the hole using a sealant to protect them from condensation and insects.

Test runs

CAUTION

- ***Be careful during the test runs, as some of the safety functions remain disabled: the units operate for two hours without switching off via the thermostat. The three-minute compressor protection is not enabled during the test.***
- ***Secure the rubber bushes to the panel using adhesive when the outdoor unit ducts are not used.***
- ***The compressor remains at a standstill during forced stoppage.***

4.1.11 DX-Interface electrical wiring

- Connect the electrical wires between the indoor unit and the outdoor unit, as shown in the next diagram.
- Follow the local codes and regulations when performing the electrical wiring.
- Use shielded wires for intermediate wiring to protect the units from noise obstacle at length of less than 300 m and size in compliance with local codes.
- In the event that a conduit tube for field-wiring is not used, fix rubber bushes to the panel with adhesive.
- All the field wiring and equipment must comply with local and international codes.
- When a cable gland is not used, it must be sealed properly in order to ensure the correct control box sealing.

CAUTION

Pay attention to the connection of the operating line. Incorrect connection may cause PCB failure.

NOTE

Packing gland diameter specification: 6.0 mm (min) to 12.0 mm (max). If needed, install additional tube insulation or wind with insulation tape around the wire to make the wire thicker.

◆ Control box terminal board

DX-Interface EXV-(2.0-6.0)E

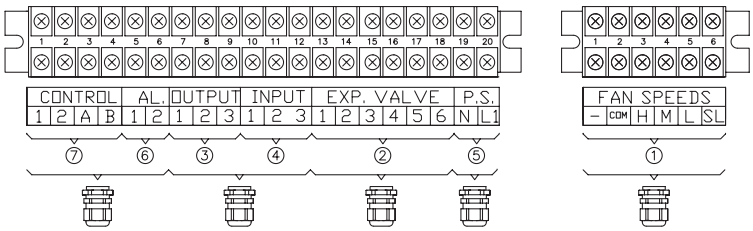

DX-Interface EXV-(8.0-10.0)E

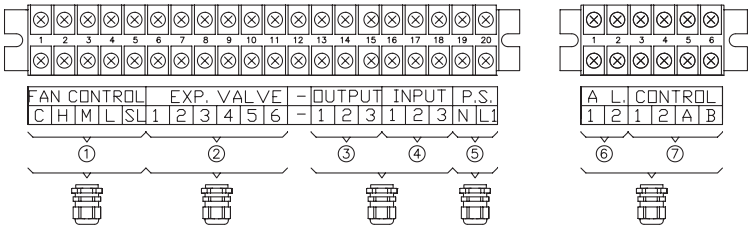

◆ Expansion valve box terminal board

DX-Interface EXV-(2.0-6.0)E / DX-Interface EXV-(8.0-10.0)E

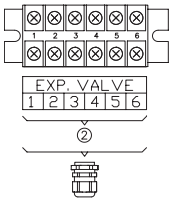

◆ Terminal board connections and remarks

Item	Description	Wire specification (EN60335-1)
1	**Fan Control (Optional: Fan speeds control by Hitachi Remote controller)** [1] • C-Common; H-High; M-Medium; L-Low; SL-Slow. • EXV-(2.0-6.0)E: 230V output signal. Maximum current allowed: 2,5 A. • EXV-(8.0/10.0)E: Free contact. Maximum current allowed: 15 A. • See “Fan tap setting” chapter 10.5.4 for fan tap setting.	EXV-(2.0-6.0)E: 5x 0,75 mm^2 EXV-(8.0/10.0)E: 5x 3,5 mm^2
2	**Expansion Valve connection (Necessary).** • Link to expansion valve assy. Number links from 1 to 6 must match in e-box terminal board and expansion valve terminal board.	6 x 0.5 mm^2
3	**Output Signals (Optional)** • Different output signals useful to embed the kit into a system. • Refer to Hitachi indoor unit Service Manual for further information about output signals setting and specifications.	3 x 0.5 mm^2
4	**Input Signals (Optional)** • Different input signals useful to embed the kit into a system. • Refer to Hitachi indoor unit Service Manual for further information about input signals setting and specifications.	3 x 0.5 mm^2
5	**Power supply (Necessary)** • Single phase supplying.	1~ 230V 50Hz Power supply cable section: 3 x 0.75 mm^2
6	**Alarm signal (Optional)** • Input signal used for alarm link between the DX-Interface and the unit connected. If the jumper is open between pins 1 and 2 in AL. terminal, the DX-Interface board detects it as an abnormality and stops the system. Alarm code 01 is showed on the remote controller. Connect again pins 1 and 2 to restart the system.	2 x 0.5 mm^2
7	**Control Signal (Necessary)** • Remote controller must be connected between pins A and B (without polarity). • Communication link with the outdoor unit is done via pins 1 and 2. Refer to Hitachi Outdoor unit Service Manual for further information about the configurations allowed.	Twisted-pair shielded cable 2 x 0.75 mm^2

[1] If the fan motor is driven by the fan control connection port (item 1),it is necessary to connect always SL fan speed. This speed is used in some special working modes as could be during defrosting time. If it is not connected the indoor unit fan motor could be stopped whatever the fan configuration was.

◆ Fan tap setting

DX-Interface EXV-(2.0-6.0)E

RC setting	C5-00 (Factory setting)	C5-01	C5-02
High	M	H	L
Medium	L	M	L
Low	SL	L	SL

DX-Interface EXV-(8.0/10.0)E

RC setting	C5-00 (Factory setting)	C5-01	C5-02
High	M	H	L
Medium	L	M	L
Low	SL	SL	SL

Please refer to HITACHI Indoor and Controllers Technical Catalogue and Service Manual for fan tap setting through the remote control.

4.1.12 Network system connection (CS-NET WEB)

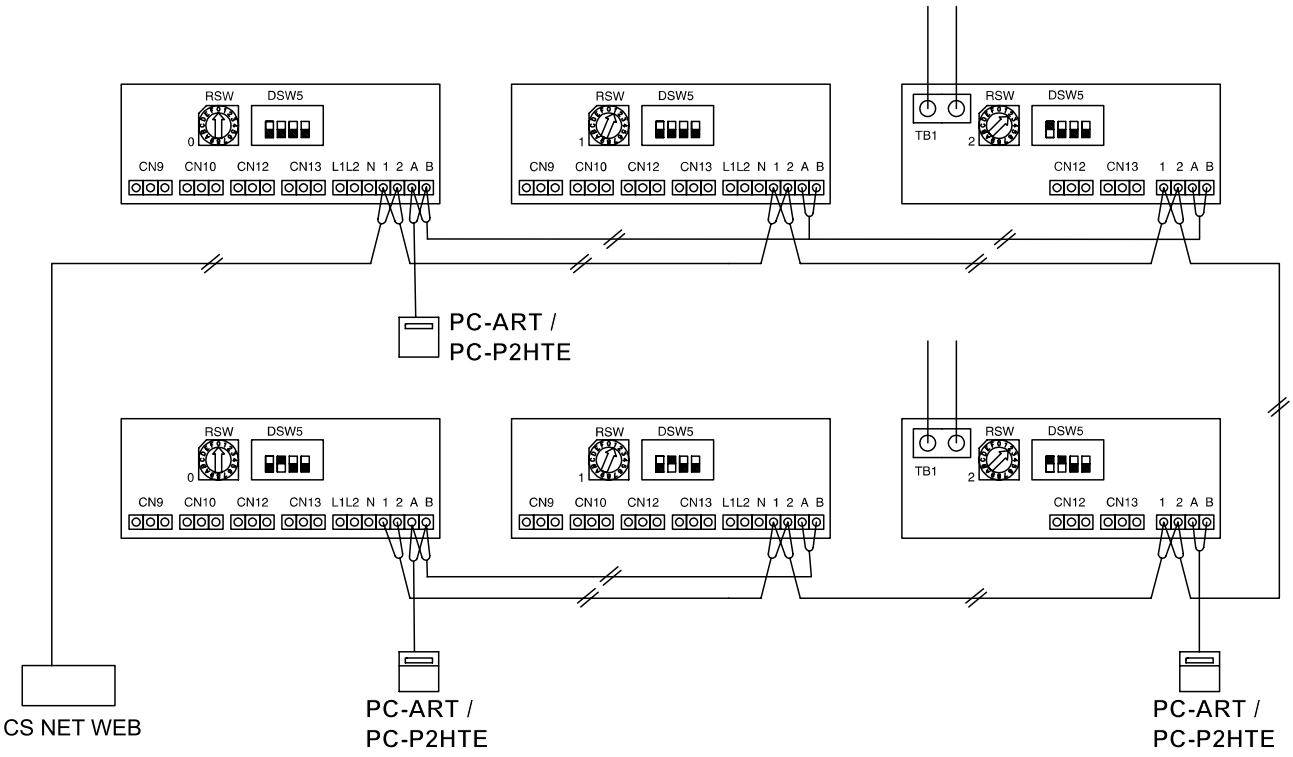

4.1.13 Connection between units H-LINK and H-LINK II

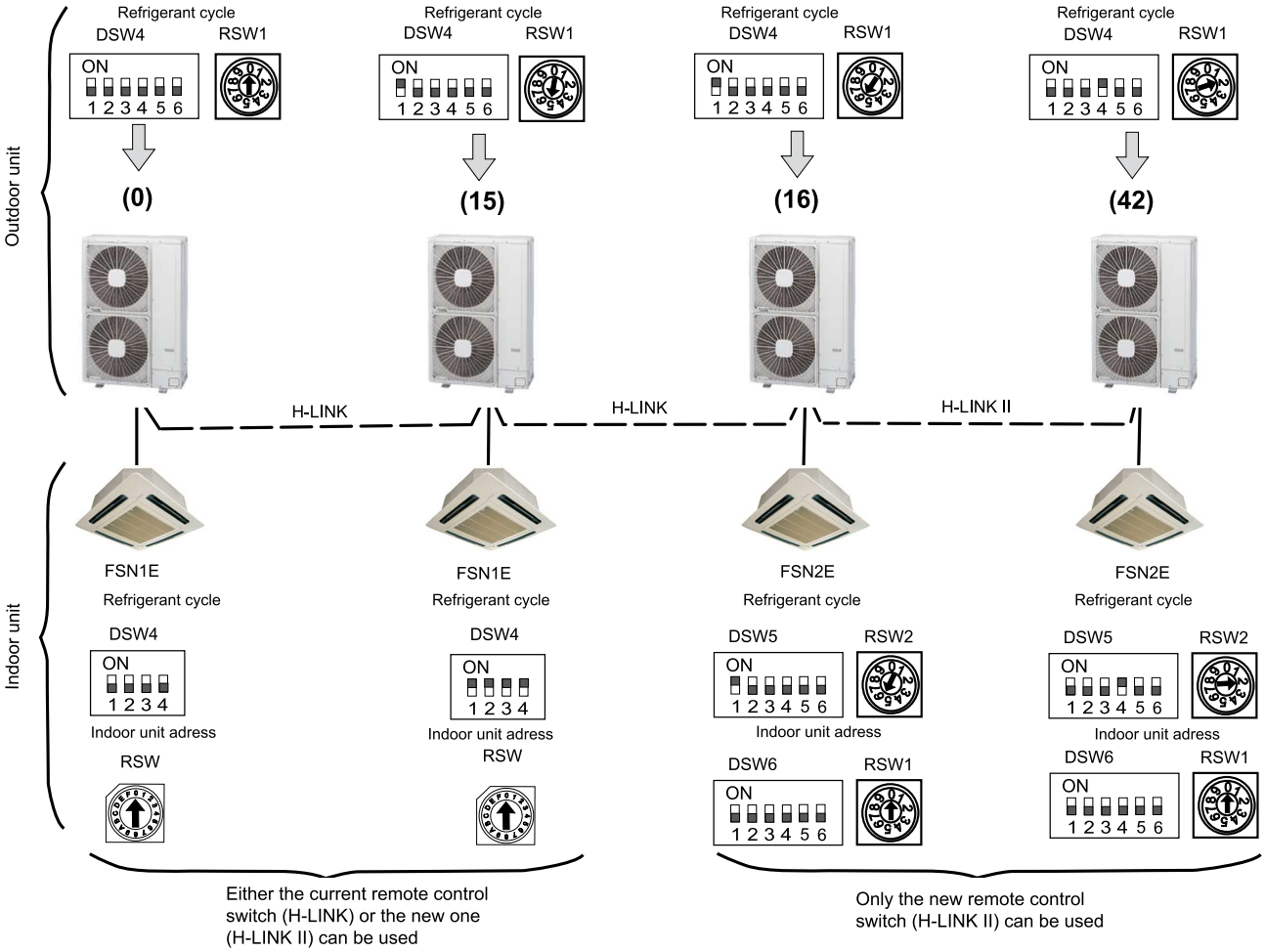

For mixed H-LINK and H-LINK II systems, set the H-LINK units in the first 16 positions of the system, as shown in the following figure. There are 26 systems with FSN(2/3)E indoor units.

NOTE

- ***H-LINK is able to manage up to 160 indoor units.***
- ***When PSC-5S and CSNET WEB 2.0 (only compatible with H-LINK), are used, remember that only 16 indoor units and 16 outdoor units can be managed.***

4.2 Setting of DIP switches and RSW switches

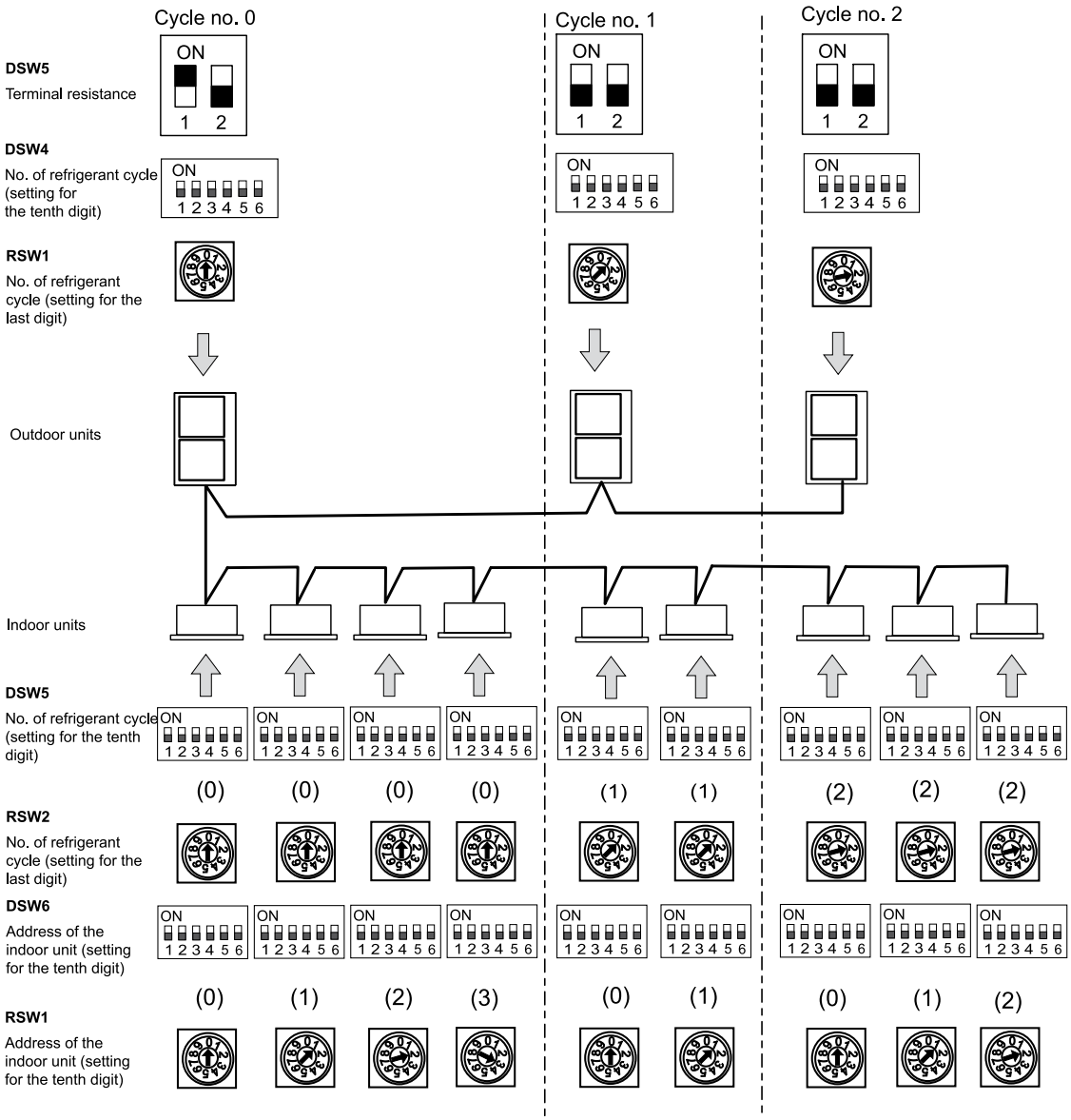

1 Turn off the power supply before setting the DIP switches. Otherwise, the switch settings are invalid.
2 To set the position of the RSW rotary switches, insert a screwdriver into the groove of the RSW.

NOTE

The DIP and RSW switches of each indoor and outdoor unit must be set, although they do not all have to be set. Read the following sections carefully for information on which ones must be set.

4.2.1 Location of DIP switches and RSW switches

Location of DIP switches and RSW rotary switches

- **RCI(M)-(1.0-6.0)FSN(2/3)(E) units**

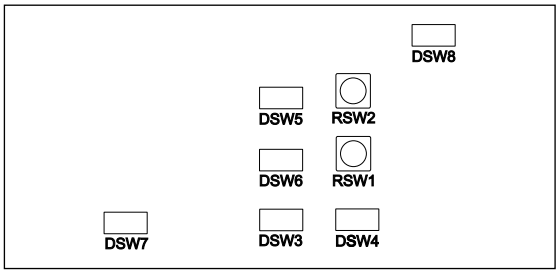

- **RCD-(1.0-3.0)FSN2 units**

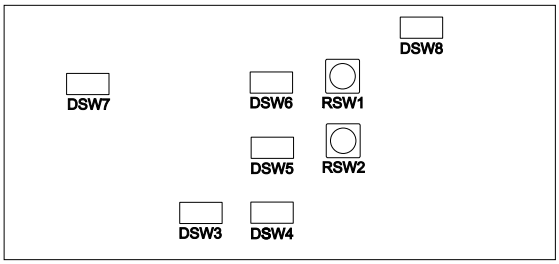

- **RPC-(2.0-6.0)FSN2E units**
- **RPF(I)-(1.0-2.5)FSN2E units**
- **RPI(M)-(0.8-6.0)FSN(2/3)E (-DU) units**

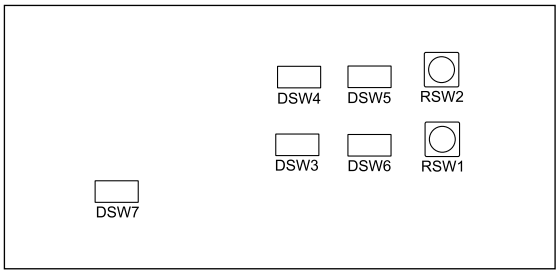

- **RPI-(8.0/10.0)FSN3E units**

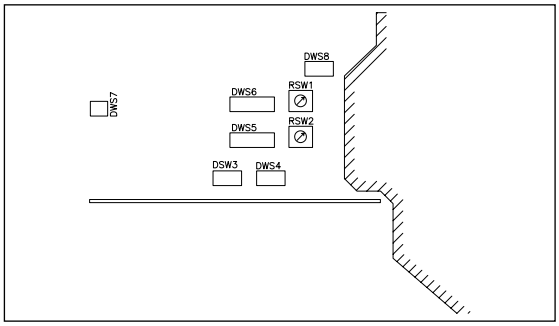

- **RPK-(1.0/1.5)FSN(H)2M units**

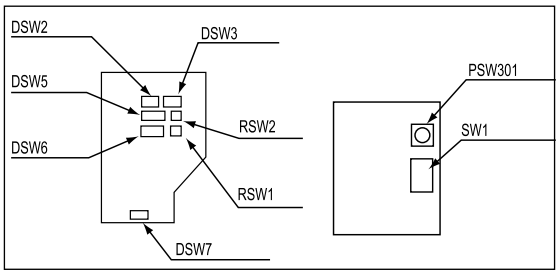

- **RPK-(2.0–4.0)FSN2M units**

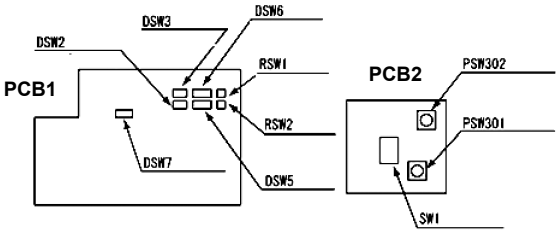

- **KPI-(252–2002)(E/H)2E units**
- **KPI-3002H2E units**

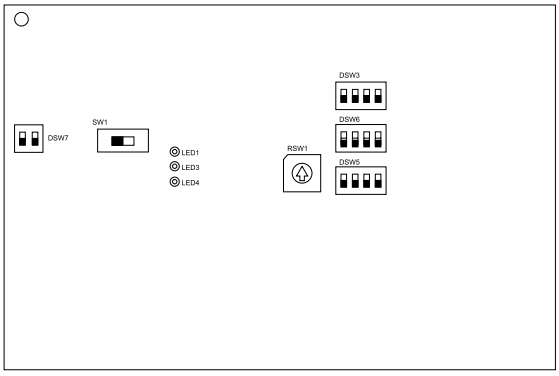

4

4.2.2 Functions of the DIP switches and RSW switches

CAUTION

Turn off the power supply before setting the DIP switches. If not, the settings will not be valid.

NOTE

- ***The symbol "■" indicates the position of the DIP switches. The figures show the setting before transmission or after selection.***
- ***If the "■" mark is not displayed, this indicates that the position of the pin is not affected.***

DSW2 switch: optional functions setting (only for RPK - FSN(H)2M)

CAUTION

Do not set the DSW2 switch, as it is factory-set prior to delivery.

RPK-(1.0/1.5)FSN(H)2M	
Factory setting	
Setting for unit no.	
RPK-(2.0-4.0)FSN(H)2M	
Factory setting	
Setting for unit no.	

DSW3 switch: capacity code setting

This is used to set the capacity code corresponding to the power of the indoor unit.

CAUTION

Do not set the DSW3 switch, as it is factory-set prior to delivery.

HP	0.8	1.0	1.3	1.5
Setting position	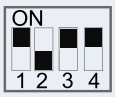	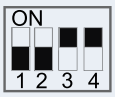		

HP	1.8	2.0	2.3	2.5
Setting position	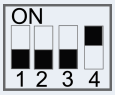	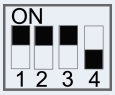	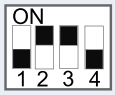	

HP	3	4	5	6
Setting position				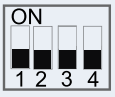

HP	8.0	10.0
Setting position	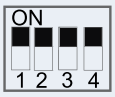	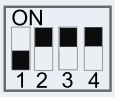

DSW4 switch: unit model code setting (except RPK-(1.0-4.0)FSN(H)2M units)

This is used to set the model code corresponding to the type of indoor unit

CAUTION

Do not set the DSW4 switch, as it is factory-set prior to delivery.

Indoor unit model code	DSW4 setting
RCI-(0.8-6.0)	
RCIM-(1.0-2.0)	
RCD-(1.0-6.0)	
RPC-(2.0-6.0)	
RPI-(0.8-6.0) RPIM-(0.8-1.5)	
RPI-(8.0/10.0)	
RPF(I)-(1.0-2.5)	

DSW5 switch / RSW2 rotary switch: refrigerant cycle number setting

This is used to set the refrigerant cycle number.

NOTE

- ***The factory setting of DSW5 switches is OFF.***
- ***The rotary switches are set by inserting a screwdriver of the appropriate size into the centre groove.***

	Setting position (DSW5)		Setting position (RSW2)
Tens setting (second digit)	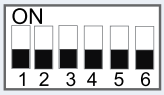	Unit setting (first digit)	
Example for number 5	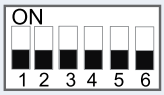	+	

DSW6 switch / RSW1 rotary switch: Unit no. setting

Set DSW6 and RSW1 to modify the indoor unit address. The setting must be made so that it does not overlap the setting of other indoor units in the same refrigerant cycle. If the setting is not made manually, the automatic address function will be enabled.

	Setting position (DSW6)		Setting position (RSW1)
Tens setting (second digit)	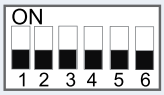	Unit setting (first digit)	
Example for number 16	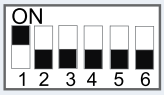	+	

DSW7 switch: Fuse recovery and remote control selection

No settings are required. All switches are factory-set to OFF. PC-ART remote control selection.	

If a high voltage is applied to TB1 terminals 1 and 2, the fuse on PCB1(M) is deactivated. Should this occur, correct the TB1 wiring and activate contact 1.

Except RPK(1.0-4.0)FSN(H)2M units	
RPK-1.5FSN(H)2M units only	

DSW8 switch: not used (RCI(M) units only)

Factory setting	

◆ **KPI**

CAUTION

Turn off the power supply before setting the DIP switches. If not, the settings will not be valid.

NOTE

- ***The symbol "■" indicates the position of the DIP switches. The figures show the setting before transmission or after selection.***
- ***If the "■" mark is not displayed, this indicates that the position of the pin is not affected.***

DSW3 switch: CO_2 sensor installation

If a CO_2 sensor is installed with the unit, setting of the dip switch is required.	Setting before shipment	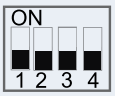
	CO_2 sensor installed	

DSW4 switch: optional settings

Setting before shipment	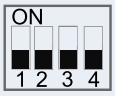
Fixed high speed	
High ventilation after switching on	
Fan stoppage delay (electrical heater)	
Air volume increasing	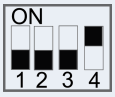

DSW6 switch / RSW1 rotary switch: Unit no. setting

Set DSW6 and RSW1 to modify the indoor unit address. The setting must be made so that it does not overlap the setting of other indoor units in the same refrigerant cycle. If the setting is not made manually, the automatic address function will be enabled.

	Setting position (DSW6)		Setting position (RSW1)
Tens setting (second digit)	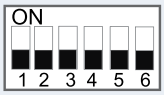	Unit setting (first digit)	
Example for number 16	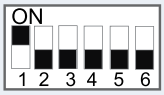	+	

DSW7 switch: Fuse recover

In case of applying high voltage to the terminal 1,2 of TB1, the fuse on the PCB1(M) is cut. In such a case, firstly correct the wiring to TB1 and then turn ON #1 (as showing beside)	

DSW5 switch / RSW2 rotary switch: refrigerant cycle number setting

This is used to set the refrigerant cycle number.

NOTE

- ***The factory setting of DSW5 switches is OFF.***
- ***The rotary switches are set by inserting a screwdriver of the appropriate size into the centre groove.***

	Setting position (DSW5)		Setting position (RSW2)
Tens setting (second digit)	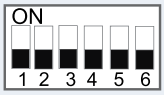	Unit setting (first digit)	
Example for number 5	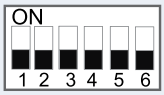	+	

DSW8 switch: not used. Not setting is required

Setting before shipment	

4

◆ **Econofresh kit**

CAUTION

Turn off the power supply before setting the DIP switches. If not, the settings will not be valid.

NOTE

- ***The symbol "■" indicates the position of the DIP switches. The figures show the setting before transmission or after selection.***
- ***If the "■" mark is not displayed, this indicates that the position of the pin is not affected.***

Functions of Econofresh mode:

- Enthalpy sensor: this is used to control the inlet of outdoor air and regulate its humidity.
- CO^2 sensor: this is used to control the inlet of outdoor air when the CO^2 concentration in the room exceeds a certain value.

NOTE

- ***The DIP switches on the PCB of the RPI indoor units must be set.***
- ***Use of the enthalpy sensor with the CO^2 detector is not compatible in the same Econofresh kit.***

DSW6 RPI-5.0FSN(1)E	
Factory setting	
RPI-5HP + Econofresh kit	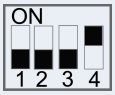

DSW4 RPI-5.0FSN(2/3)E	
Factory setting	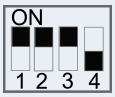
RPI-5HP + Econofresh kit	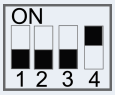

DX-Interface

DSW3: capacity code setting

No setting is required. This DIP switch is used to set the capacity code corresponding to the DX-Interface power (HP).

DSW4: Unit model code setting

No setting is required. Settings position before shipment is:

EVX-(2.0-6.0)E	
EVX-(8.0-10.0)E	

DSW5 and RSW2: Refrigerant cycle No. setting

Setting is required. This switch is used to set the refrigerant cycle number.

	Setting Position (DSW5)		Setting position (RSW2)
Tens setting (second digit)		Unit setting first digit)	
Example for number 6		+	

DSW6 and RSW1: Unit No. setting

Set DSW6 and RSW1 to modify the indoor unit address. The setting must be made so that it does not overlap the setting of other indoor units in the same refrigerant cycle. If the setting is not made manually, the automatic address function will be enable.

Factory-set to a value of up to 63.

DSW6	RSW1

Example of setting for unit no. 16

DSW6	RSW1

DSW7 switch: Fuse recovery and remote control selection

No settings are required. All switches are factory-set to OFF. PC-ART remote control selection.	

If high voltage is applied to P.S. terminal L1 and N, the fuse on PCB1 (M) is deactivated. Should this occur, correct the TB1 wiring and active contact 1.

DSW8: (Not used)

No setting is required, due to setting before shipment. Setting position before shipment is all OFF.

NOTE

The "■" mark indicates position of dips switches. Figures show setting before shipment or after selection.

HITACHI
Inspire the Next

4.3 Wiring diagrams for indoor units and complementary systems

4.3.1 Wiring diagrams for indoor units

◆ Wiring diagrams for the RCI-(1.0-6.0)FSN3E indoor units

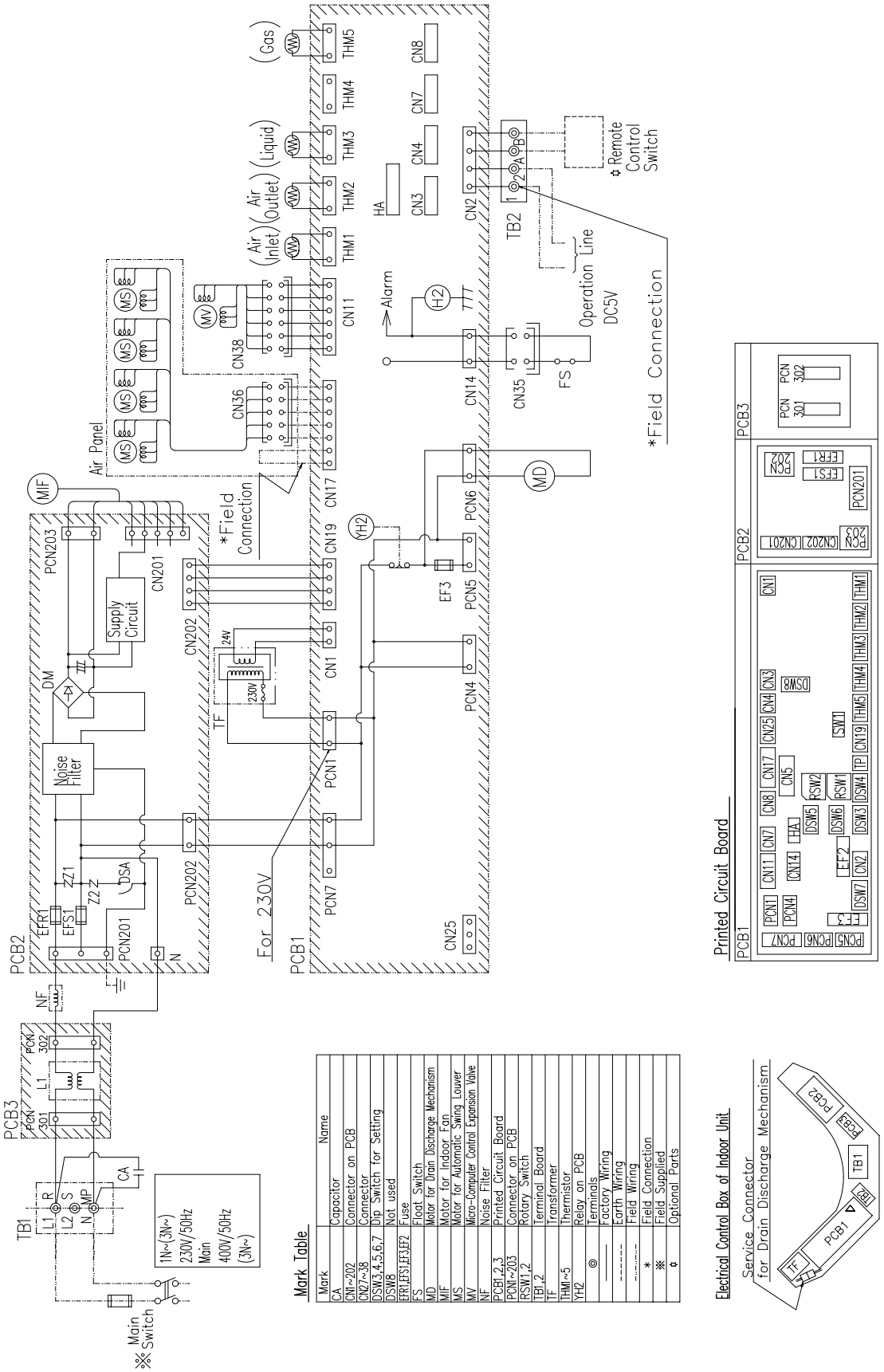

◆ Wiring diagrams for the RCIM-(1.0-2.0)FSN2 indoor units

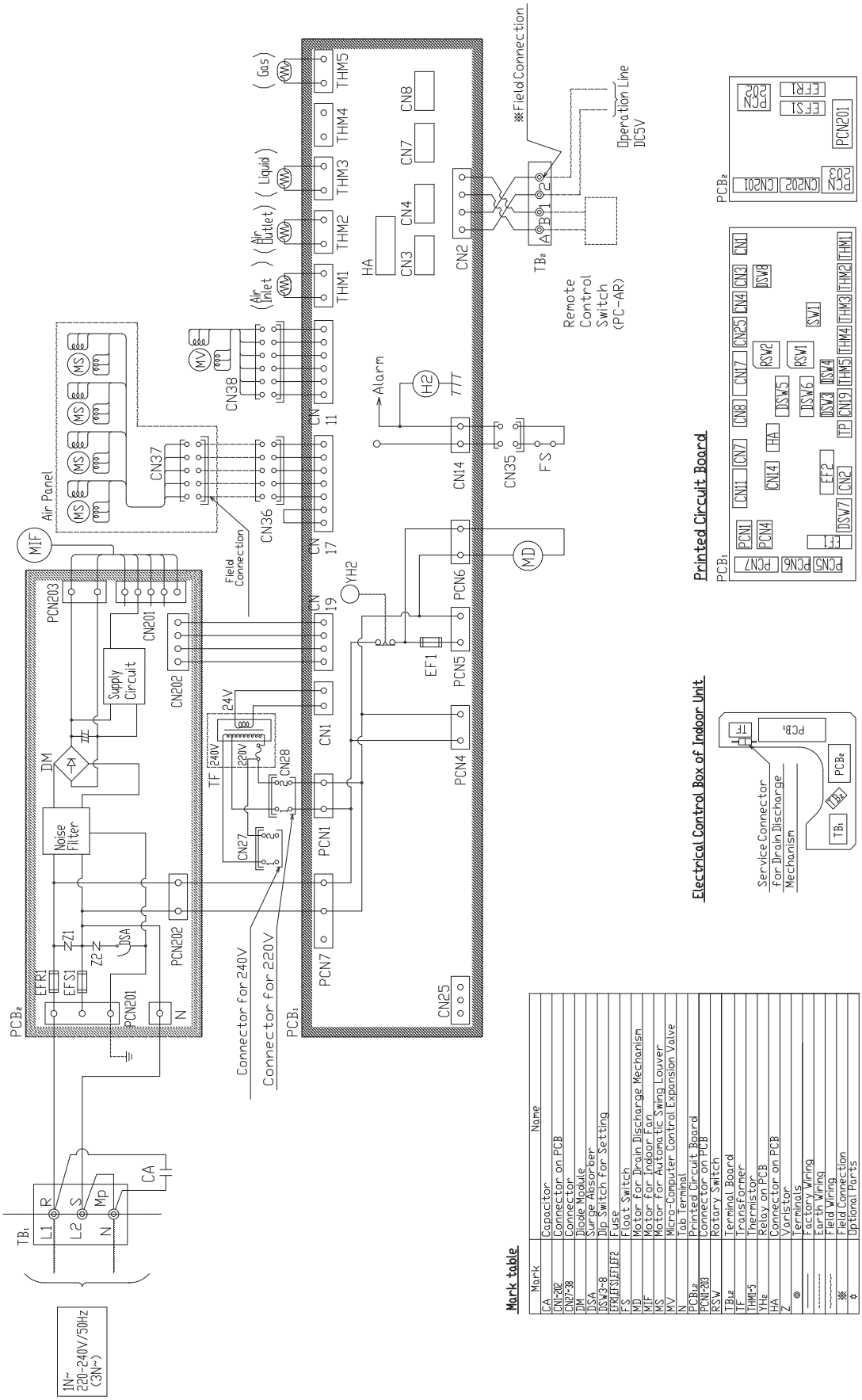

Mark table

Mark	Name
CA	Capacitor
CN1-20	Connector on PCB
CN27-38	Connector
DM	Diode Module
DSA	Surge Absorber
DSW3~8	Dip Switch for Setting
EFR1,EFS1,EF1,EF2	Fuse
FS	Float Switch
MD	Motor for Drain Discharge Mechanism
MIF	Motor for Indoor Fan
MS	Motor for Automatic Swing Louver
MV	Micro-Computer Control Expansion Valve
N	Tab Terminal
PCB1,2	Printed Circuit Board
PCN1-20	Connector on PCB
RSW	Rotary Switch
TB1,2	Terminal Board
TF	Transformer
THM1~5	Thermistor
YH2	Relay on PCB
HA	Connector on PCB
Z	Varistor
◎	Terminals
------	Factory Wiring
------	Earth Wiring
------	Field Wiring
※	Field Connection
✧	Optional Parts

HITACHI
Inspire the Next

◆ Wiring diagrams for the RCD-(1.0-5.0)FSN2 indoor units

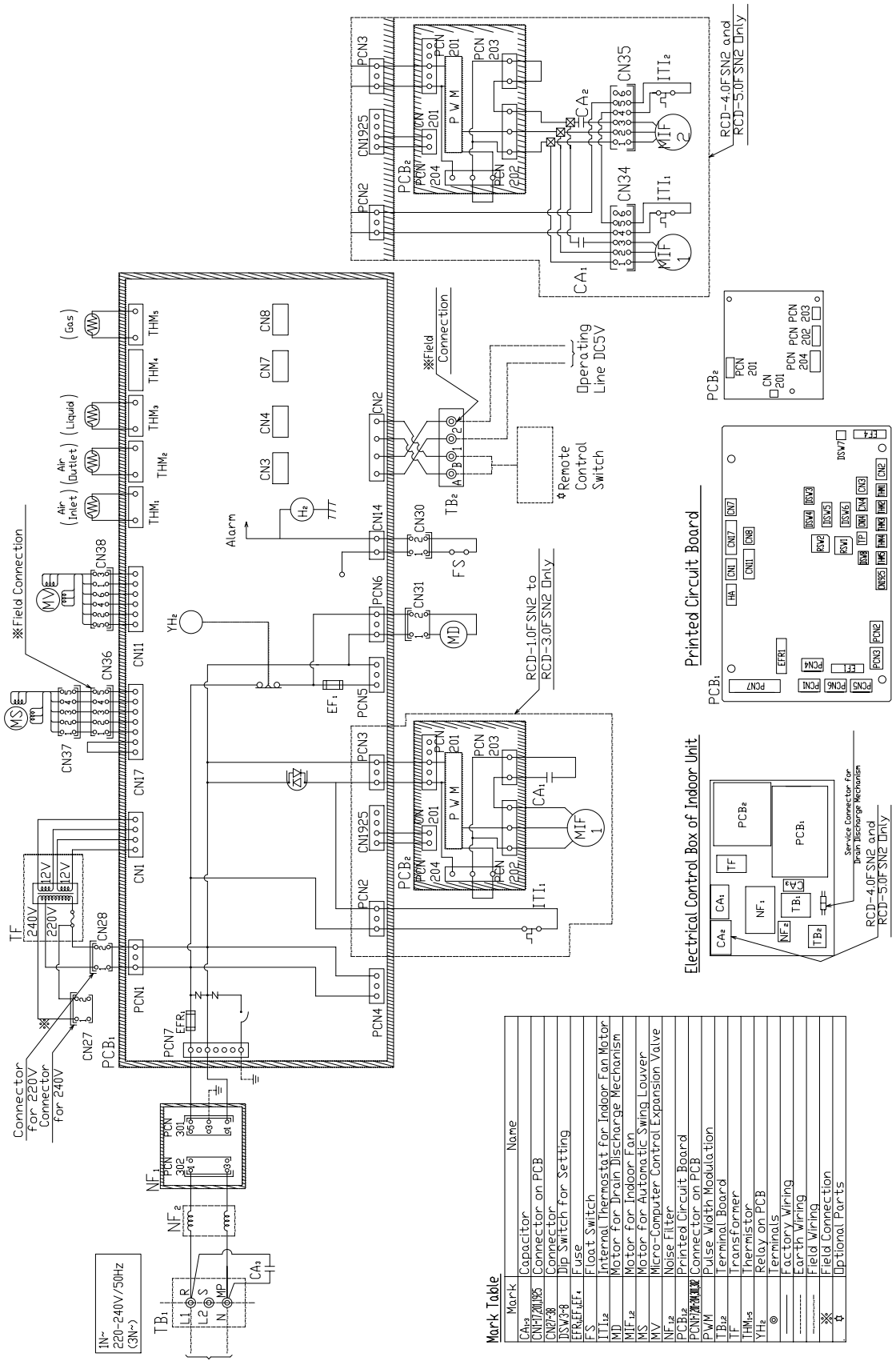

◆ Wiring diagrams for the RPC-(2.0-6.0)FSN2E indoor units

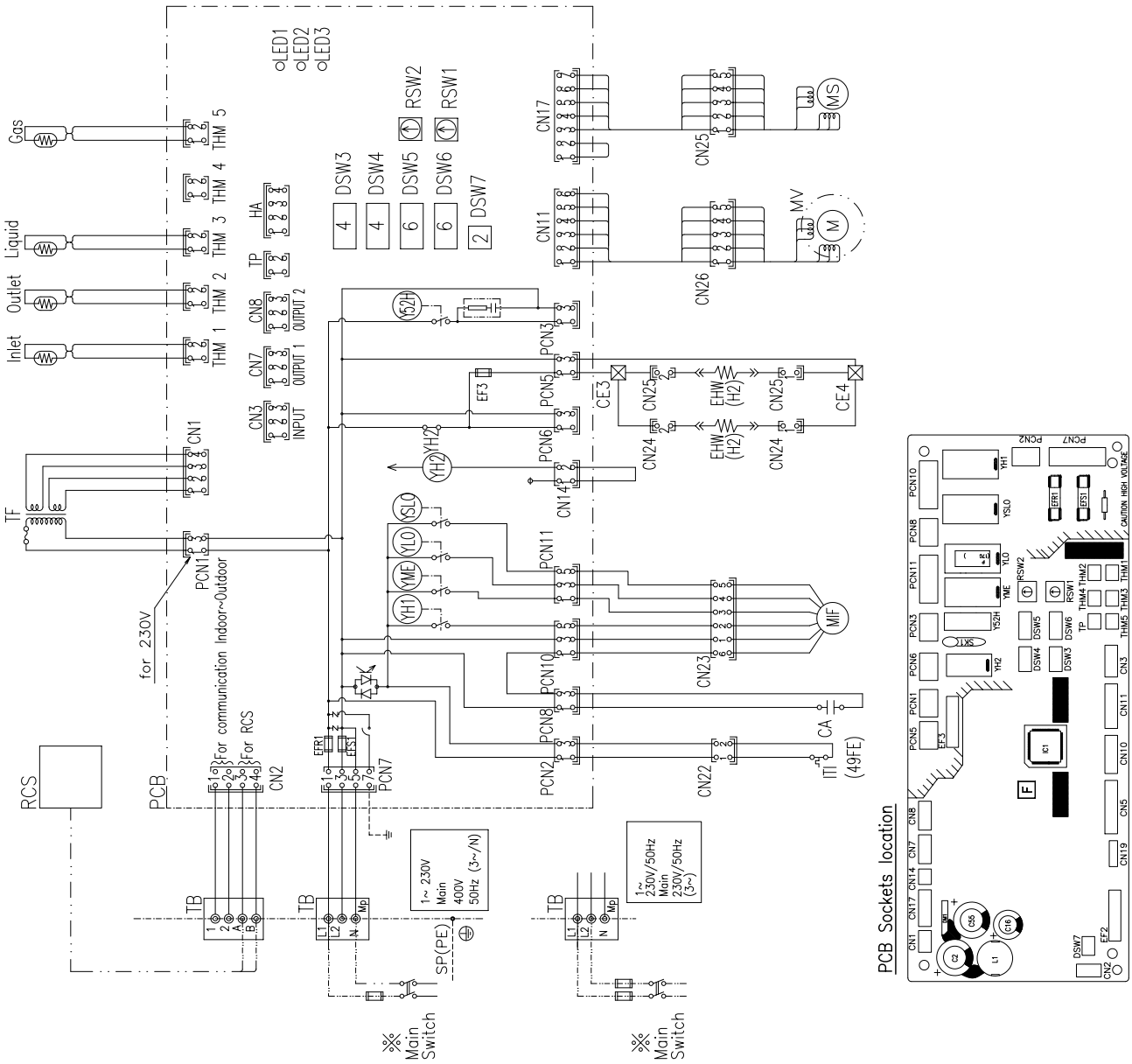

Mark Table

Mark	Part Name
CA	Capacitor for Indoor Fan
CN21~26	Connector
DSW3	Unit Capacity Code
DSW4	Model
DSW5	Refrigerant Cycle n°
DSW6	Unit Code
DSW7	Fuse Recover / Remot Controller Selector
EFR1	Fuse
EFS1	Fuse
EHW(H2)	Electric Heater for Condensate Air Protection
FS	Float Switch
ITI	Internal Thermostat for Indoor Fan Motor
MD	Motor for Drain Discharge Mechanism
MIF	Motor for Indoor Fan
MS	Motor for Automatic Swing Louver
MV	Expansion Valve
LED1~3	Alarm Code
PCB	Printed Circuit Board
RCS	Remote Control Switch
RSW1	Indoor Unit no. Settings
RSW2	Refrigerant Cycle n°
SA	Surge Absorber
TB	Terminal Board
TF	Transformer
THM1	Inlet Air Thermistor
THM2	Outlet Air Thermistor
THM3	Liquid Pipe Thermistor
THM5	Gas Pipe Thermistor
YH2	Relay for Drain Motor
YH1	Relay for HI Fan Motor Tap
YME	Relay for ME Fan Motor Tap
YLO	Relay for LO Fan Motor Tap
YSLO	Relay for SLO Fan Motor Tap
YS2H	Relay for Electric Heater
◎	Terminals
—⊠—	Close-end Connector
※	Field Supplied
------	Field Wiring
------	Earth Wiring
——	Factory Wiring

Electrical Control Box RPC-(2.0~3.0)FSN2E

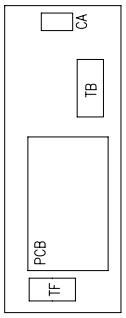

Electrical Control Box for RPC-(4.0~6.0)FSN2E

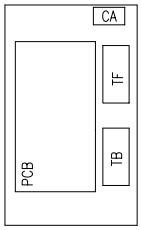

◆ Wiring diagrams for the RPI-(0.8-1.5)FSN2E indoor units

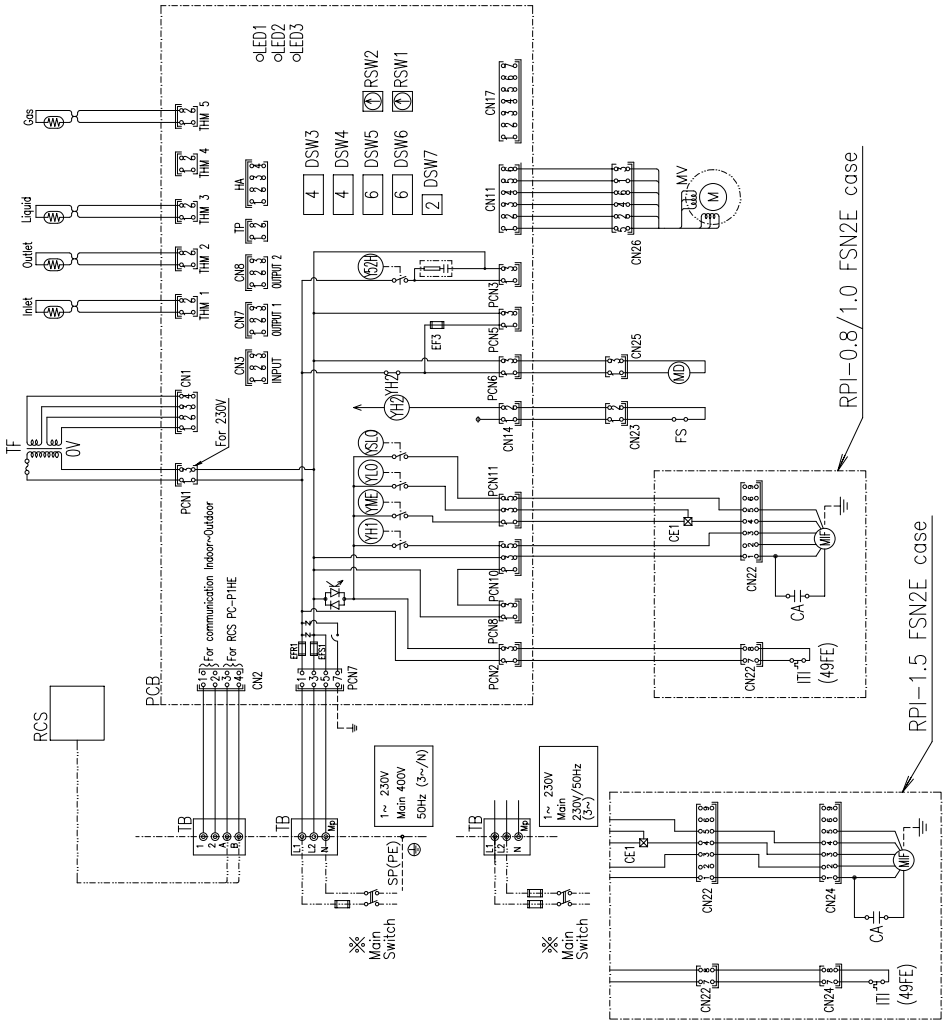

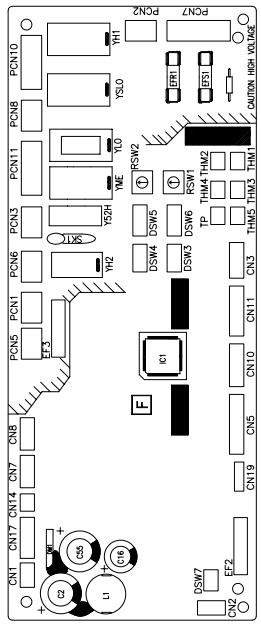

Mark Table

Mark	Part Name
CA	Capacitor for Indoor Fan
CN20~24	Connector
DSW3	Unit Capacity Code
DSW4	Model
DSW5	Refrigerant Cycle n°
DSW6	Unit Code
DSW7	Fuse Recover / Remote Controller Selector
EFR1	Fuse
EFS1	Fuse
FS	Float Switch
ITI	Internal Thermostat for Indoor Fan Motor
MD	Motor for Drain Discharge Mechanism
MIF	Motor for Indoor Fan
MV	Expansion Valve
LED1~3	Alarm Code
PCB	Printed Circuit Board
RCS	Remote Control Switch
RSW1	Indoor Unit no. Settings
RSW2	Refrigerant Cycle n°
SSW	Slide Switch
TB	Terminal Board
TF	Transformer
THM1	Inlet Air Thermistor
THM2	Outlet Air Thermistor
THM3	Liquid Pipe Thermistor
THM5	Gas Pipe Thermistor
YH2	Relay for Drain Motor
YH1	Relay for HI Fan Motor Tap
YME	Relay for ME Fan Motor Tap
YLO	Relay for LO Fan Motor Tap
YSLO	Relay for SLO Fan Motor Tap
Y52H	Relay for Electric Heater
◎	Terminals
—⊠—	Close-end Connector
※	Field Supplied
-.-.-.-	Field Wiring
----	Earth Wiring
——	Factory Wiring

Electrical Control Box for Indoor Unit

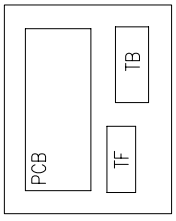

◆ Wiring diagrams for the RPI-(2.0-6.0)FSN3E indoor units

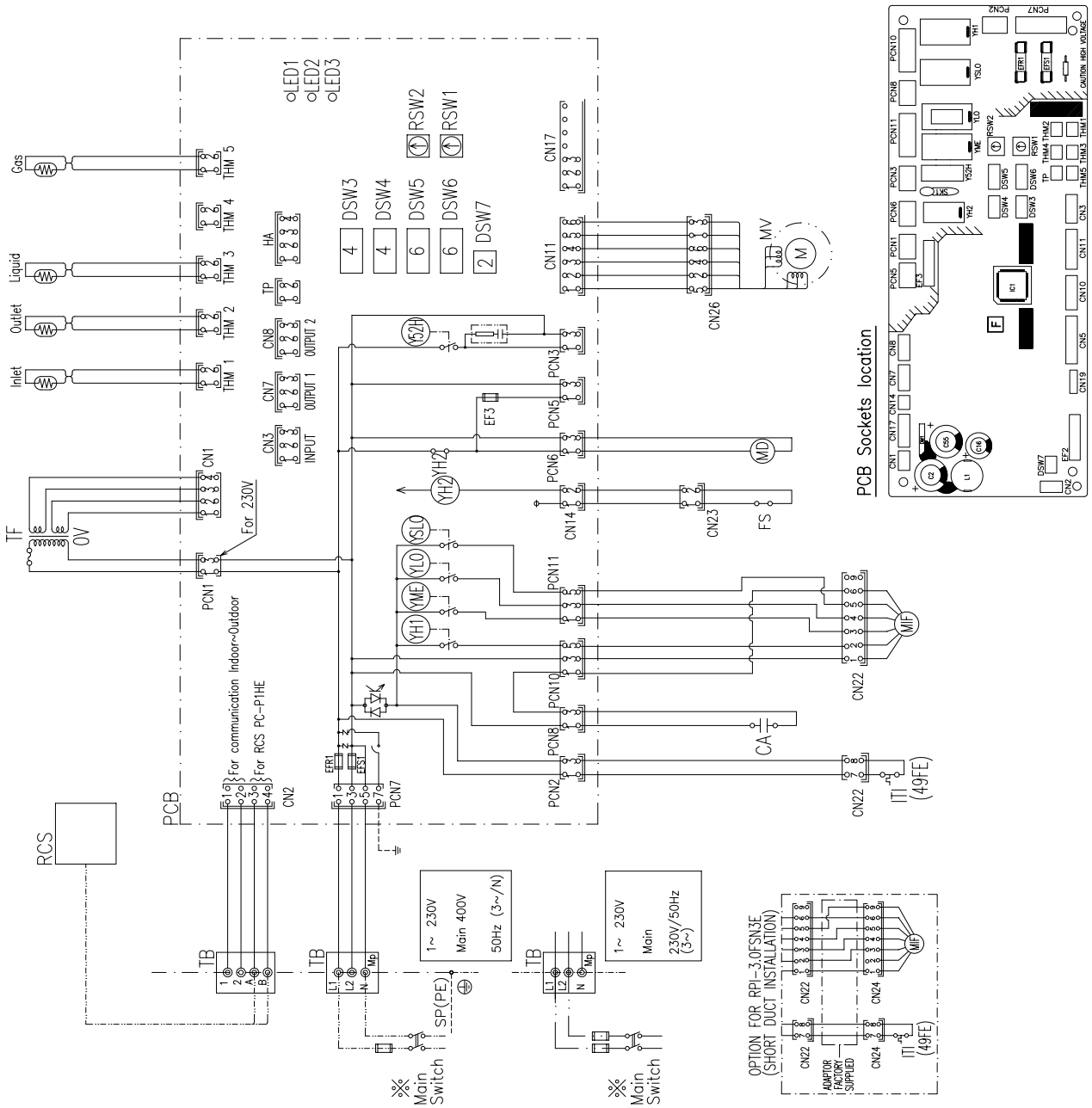

Electrical Control Box for Indoor Unit

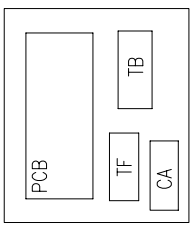

Mark Table

Mark	Part Name
CA	Capacitor for Indoor Fan
CN20~24	Connector
DSW3	Unit Capacity Code
DSW4	Model
DSW5	Refrigerant Cycle n°
DSW6	Unit Code
DSW7	Fuse Recover / Remote Controller Selector
EFR1	Fuse
EFS1	Fuse
FS	Float Switch
ITI	Internal Thermostat for Indoor Fan Motor
MD	Motor for Drain Discharge Mechanism
MIF	Motor for Indoor Fan
MV	Expansion Valve
LED1~3	Alarm Code
PCB	Printed Circuit Board
RCS	Remote Control Switch
RSW1	Indoor Unit no. Settings
RSW2	Refrigerant Cycle n°
SSW	Slide Switch
TB	Terminal Board
TF	Transformer
THM1	Inlet Air Thermistor
THM2	Outlet Air Thermistor
THM3	Liquid Pipe Thermistor
THM5	Gas Pipe Thermistor
YH2	Relay for Drain Motor
YH1	Relay for HI Fan Motor Tap
YME	Relay for ME Fan Motor Tap
YLO	Relay for LO Fan Motor Tap
YSLO	Relay for SLO Fan Motor Tap
Y52H	Relay for Electric Heater
◎	Terminals
—⊠—	Close-end Connector
※	Field Supplied
------	Field Wiring
----	Earth Wiring
——	Factory Wiring

◆ Wiring diagrams for the RPI-(8.0/10.0)FSN3E indoor units

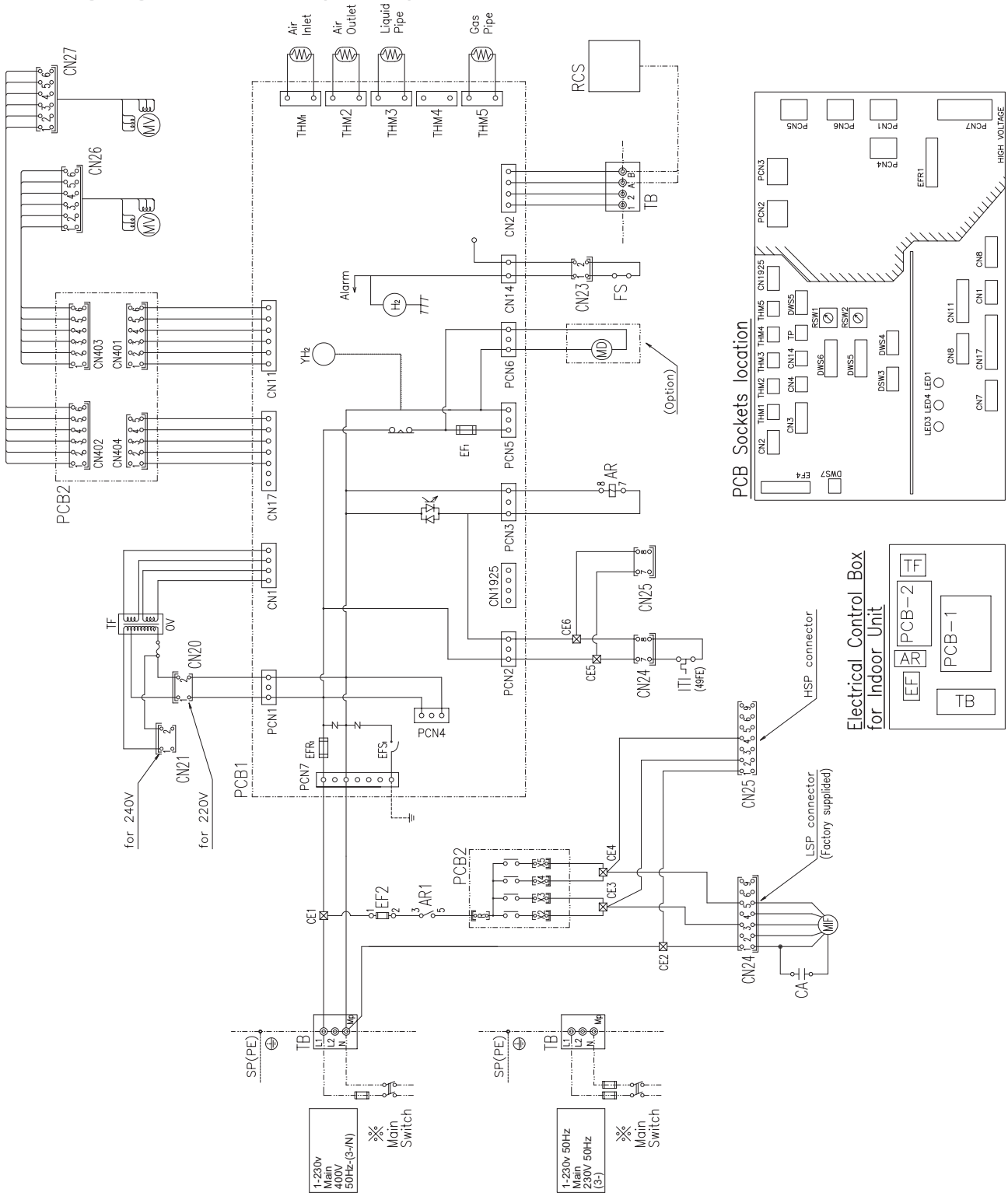

Mark Table

Mark	Part Name
AR	Auxiliary Relay
CA	Capacitor for Indoor Fan
CN20~n	Connector
DSW3	Unit Capacity Code
DSW4	Unit Model Code
DSW5	Refrigerant Cycle n°
DSW6	Indoor Unit Setting
DSW7	Fuse Recover/Remote Controller Selector
DSW8	Not Used
EF2	Fuse
EFR1	Fuse
FS	Float Switch
ITI	Internal Thermostat for Indoor Fan Motor
MD	Motor for Drain Discharge Mechanism
MIF	Motor for Indoor Fan
MV	Micro-Computer Control Exp. Valve
LED1~3	Alarm Code
PCB-1	Main Printed Circuit Board
PCB-2	Relay Printed Circuit Board
X2	High Speed Terminal
X3	Medium Speed Terminal
X4	Low Speed Terminal
X5	S-Low Speed Terminal
RCS	Remote Control Switch
RSW1	Indoor Unit no. Settings
RSW2	Refrigerant Cycle no. Settings
TB	Terminal Board
TF	Transformer
THM1	Inlet Air Thermistor
THM2	Outlet Air Thermistor
THM3	Liquid Pipe Thermistor
THM5	Gas Pipe Thermistor
◎	Terminals
⊠	Close-end Connector
※	Field Supplied
-·-·-	Field Wiring
------	Earth Wiring
——	Factory Wiring

◆ Wiring diagrams for the RPIM-(0.8-1.5)FSN2E (-DU) indoor units

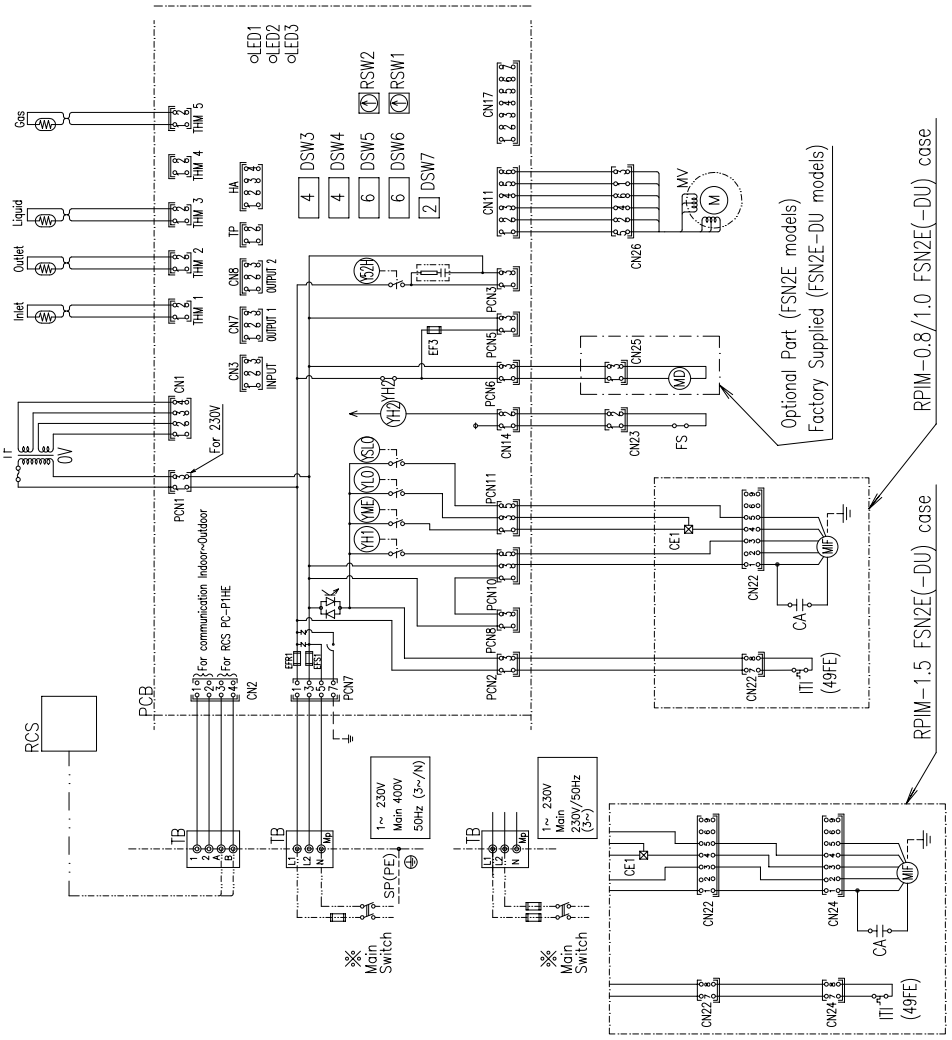

PCB Sockets location

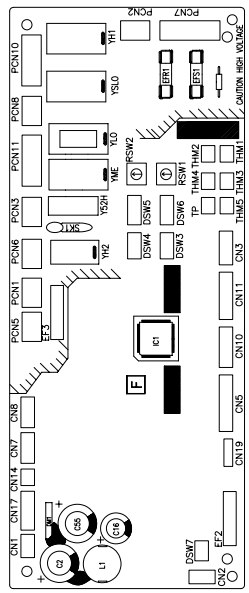

Mark Table

Mark	Part Name
CA	Capacitor for Indoor Fan
CN20~24	Connector
DSW3	Unit Capacity Code
DSW4	Model
DSW5	Refrigerant Cycle n°
DSW6	Unit Code
DSW7	Fuse Recover / Remote Controller Selector
EFR1	Fuse
EFS1	Fuse
FS	Float Switch
ITI	Internal Thermostat for Indoor Fan Motor
MD	Motor for Drain Discharge Mechanism
MIF	Motor for Indoor Fan
MV	Expansion Valve
LED1~3	Alarm Code
PCB	Printed Circuit Board
RCS	Remote Control Switch
RSW1	Indoor Unit no. Settings
RSW2	Refrigerant Cycle n°
SSW	Slide Switch
TB	Terminal Board
TF	Transformer
THM1	Inlet Air Thermistor
THM2	Outlet Air Thermistor
THM3	Liquid Pipe Thermistor
THM5	Gas Pipe Thermistor
YH2	Relay for Drain Motor
YH1	Relay for HI Fan Motor Tap
YME	Relay for ME Fan Motor Tap
YLO	Relay for LO Fan Motor Tap
YSLO	Relay for SLO Fan Motor Tap
Y52H	Relay for Electric Heater
◎	Terminals
-⊠-	Close-end Connector
※	Field Supplied
-.-.-.-	Field Wiring
-----	Earth Wiring
——	Factory Wiring

Electrical Control Box for Indoor Unit

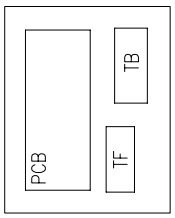

4

HITACHI
Inspire the Next

◆ Wiring diagrams for the RPK-(1.0/1.5)FSN2M indoor units

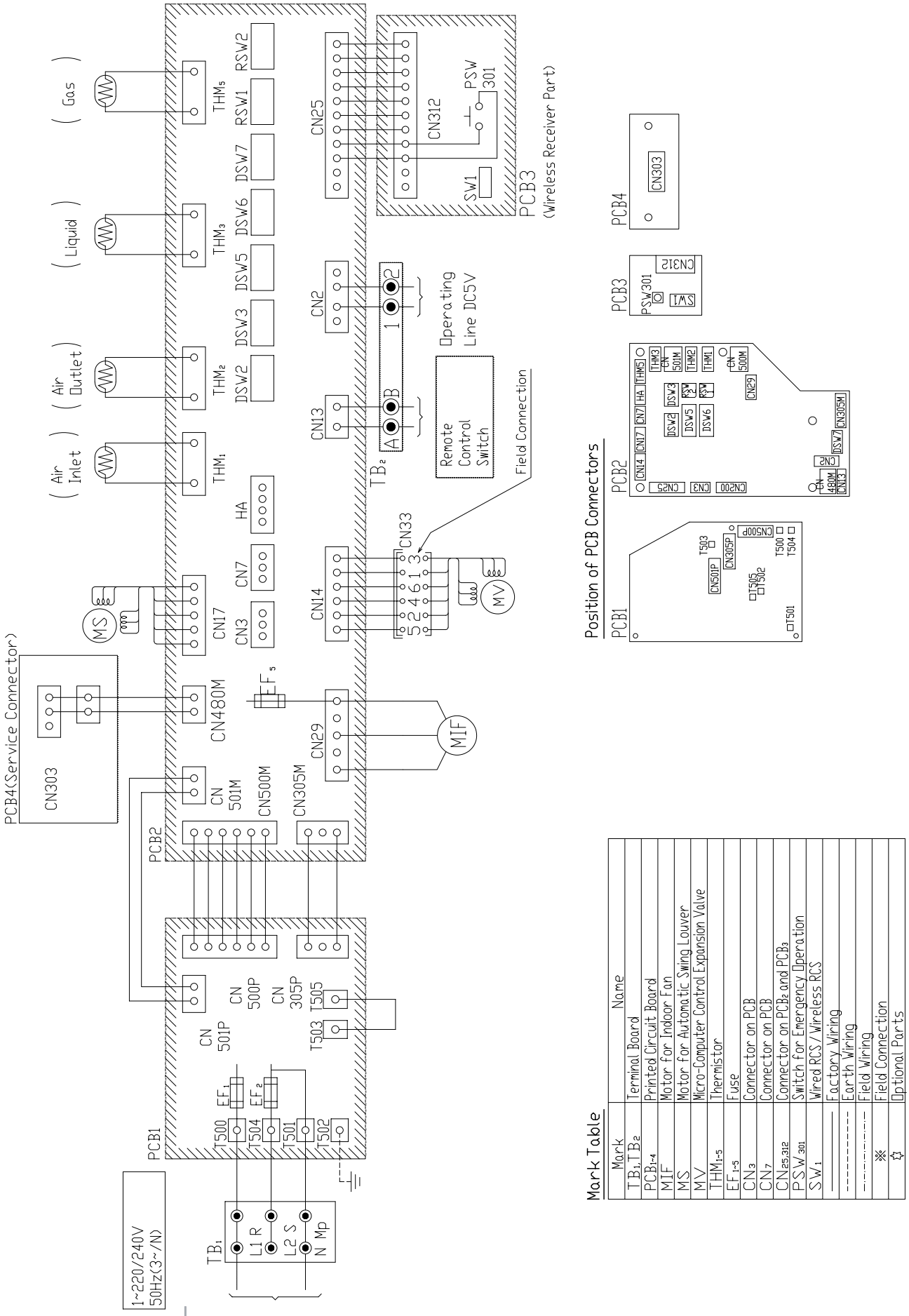

Mark Table

Mark	Name
TB_1, TB_2	Terminal Board
$PCB_{1\sim4}$	Printed Circuit Board
MIF	Motor for Indoor Fan
MS	Motor for Automatic Swing Louver
MV	Micro-Computer Control Expansion Valve
$THM_{1\sim5}$	Thermistor
$EF_{1\sim5}$	Fuse
CN_3	Connector on PCB
CN_7	Connector on PCB
$CN_{25,312}$	Connector on PCB_2 and PCB_3
PSW_{301}	Switch for Emergency Operation
SW_1	Wired RCS / Wireless RCS
———	Factory Wiring
- - - - - -	Earth Wiring
-·-·-·-·-	Field Wiring
※	Field Connection
☆	Optional Parts

◆ Wiring diagrams for the RPK-(1.0/1.5)FSNH2M indoor units

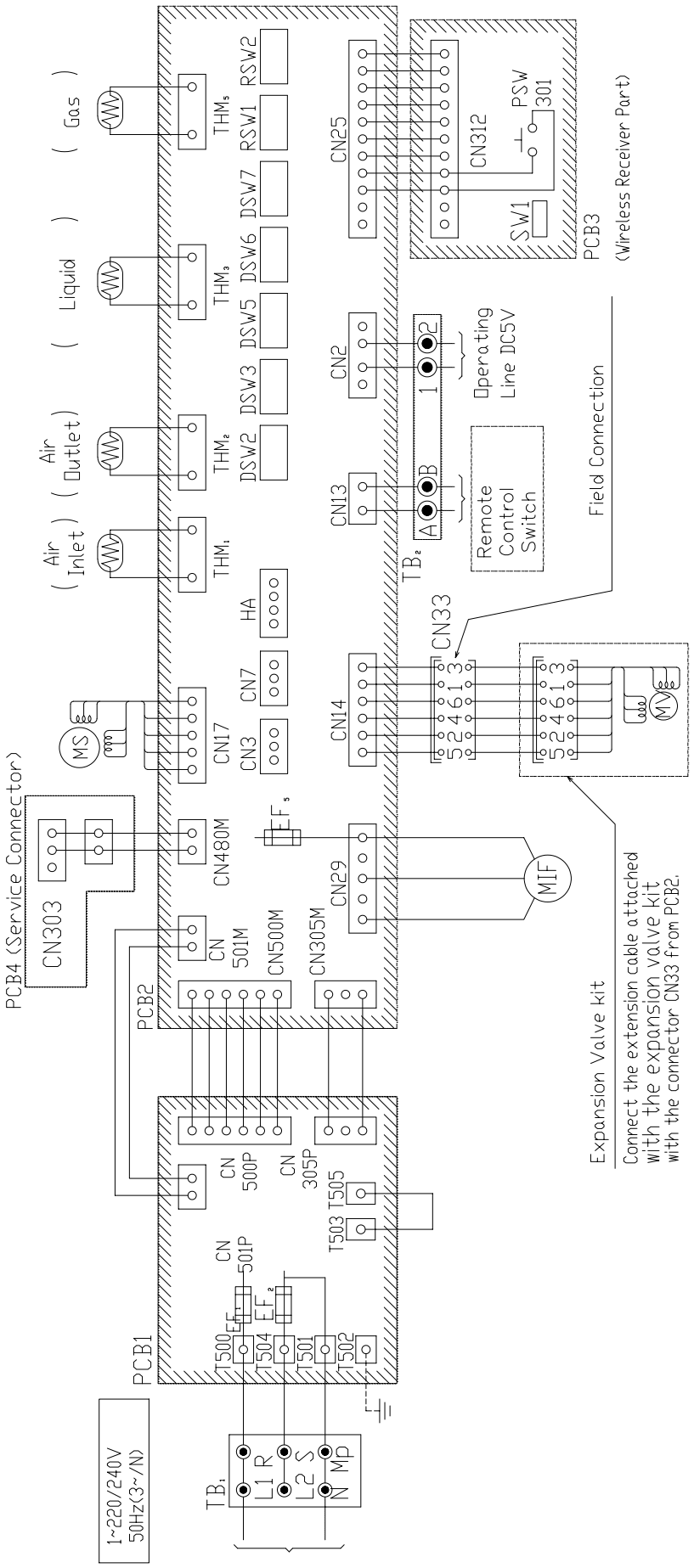

Position of PCB Connectors

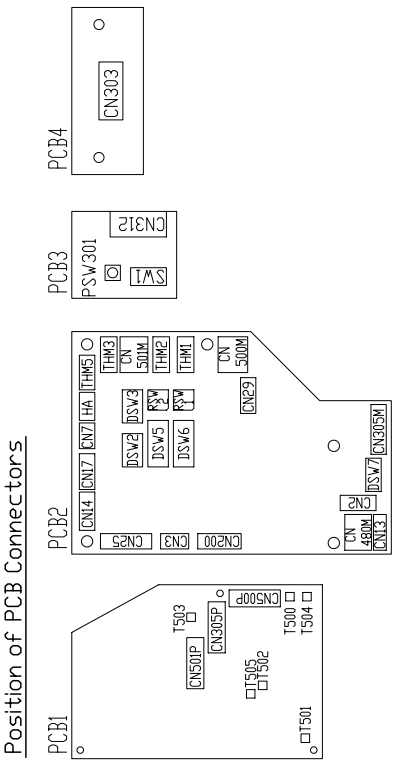

Mark Table

Mark	Name
TB_1,TB_2	Terminal Board
$PCB_{1\sim4}$	Printed Circuit Board
MIF	Motor for Indoor Fan
MS	Motor for Automatic Swing Louver
MV	Micro-Computer Control Expansion Valve
$THM_{1\sim5}$	Thermistor
$EF_{1\sim5}$	Fuse
CN_3	Connector on PCB
CN_7	Connector on PCB
$CN_{25,312}$	Connector on PCB_2 and PCB_3
PSW_{301}	Switch for Emergency Operation
SW_1	Wired RCS / Wireless RCS
———	Factori wiring
- - - - - - - -	Earth Wiring
-·-·-·-·-·-·-	Field Wiring
✳	Field Connection
☆	Optional Parts

HITACHI
Inspire the Next

◆ Wiring diagram for the RPK-2.0FSN2M indoor unit

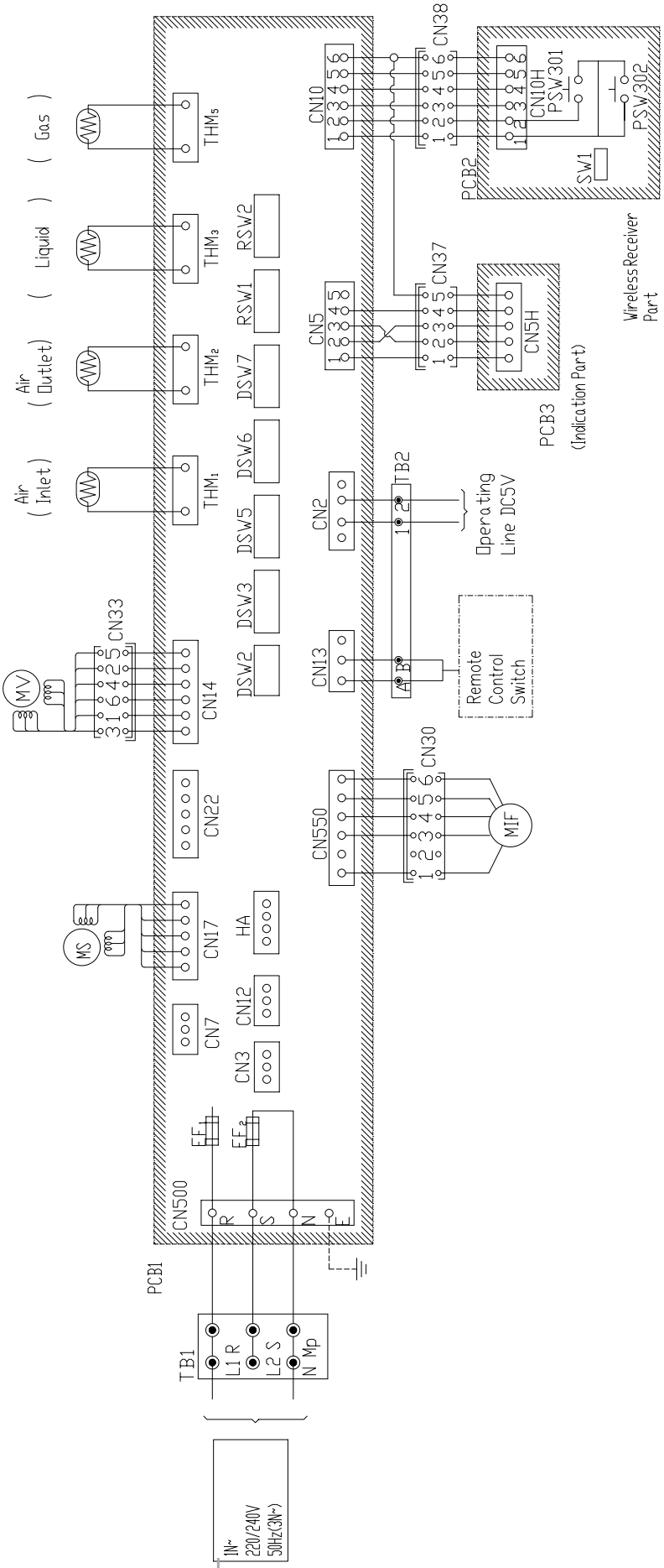

Position pf PCB connectors

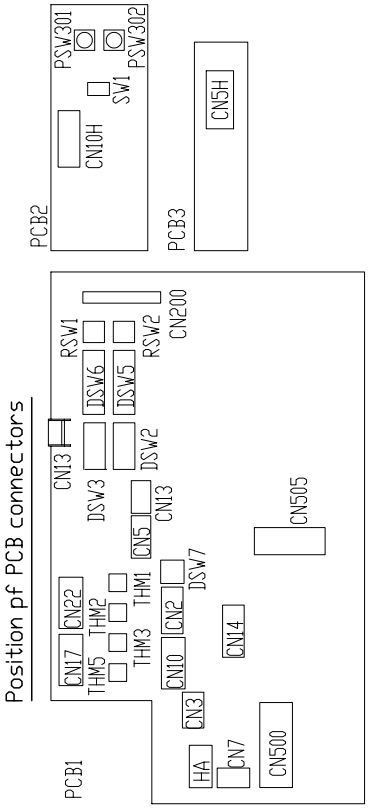

Mark Table

Mark	Name
TB1, TB2	Terminal Board
PCB1-4	Printed Circuit Board
MIF	Motor for Indoor Fan
MS	Motor for Automatic Swing Louver
MV	Micro-Computer Control Expansion Valve
THM1-5	Thermistor
EF1,2	Fuse
CN3	Connector on PCB1
CN7	Connector on PCB1
CN5(H),10(H)	Connector on PCB1,2,3
PSW301,302	Switch for Emergency Operation
SW1	Wired RCS / Wireless RCS
———	Factory wiring
- - - - - -	Earth wiring
-·-·-·-·-	Field wiring
☆	Optional Parts

◆ Wiring diagrams for the RPK-(2.5-4.0)FSN2M indoor units

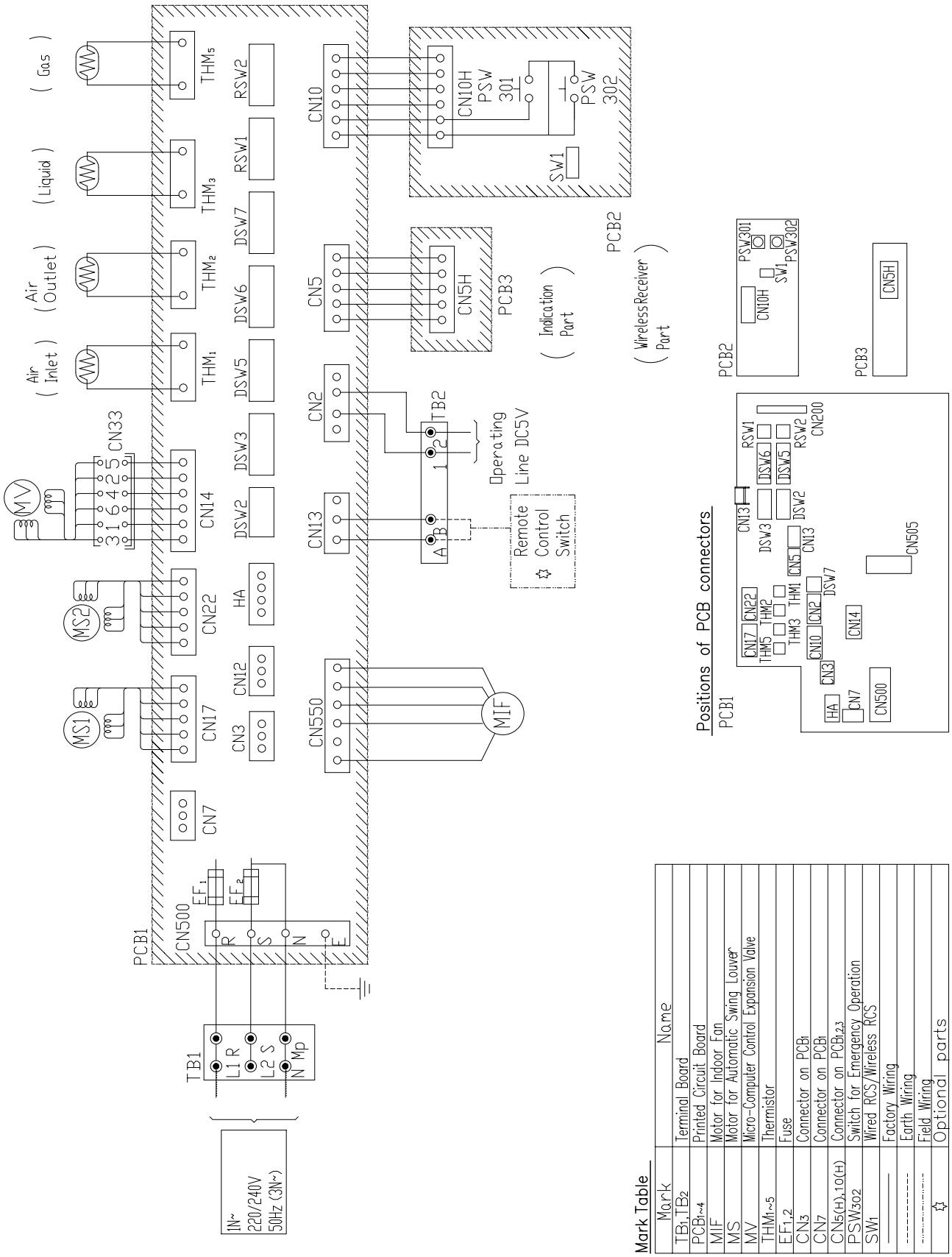

Mark Table

Mark	Name
TB_1, TB_2	Terminal Board
$PCB_{1\sim4}$	Printed Circuit Board
MIF	Motor for Indoor Fan
MS	Motor for Automatic Swing Louver
MV	Micro-Computer Control Expansion Valve
$THM_{1\sim5}$	Thermistor
$EF_{1,2}$	Fuse
CN_3	Connector on PCB_1
CN_7	Connector on PCB_1
$CN_{5(H),10(H)}$	Connector on $PCB_{1,2,3}$
PSW_{302}	Switch for Emergency Operation
SW_1	Wired RCS/Wireless RCS
———	Factory Wiring
- - - - - -	Earth Wiring
-·-·-·-·-	Field Wiring
☆	Optional parts

◆ Wiring diagrams for the RPF(I)-(1.0-2.5)FSN2E indoor units

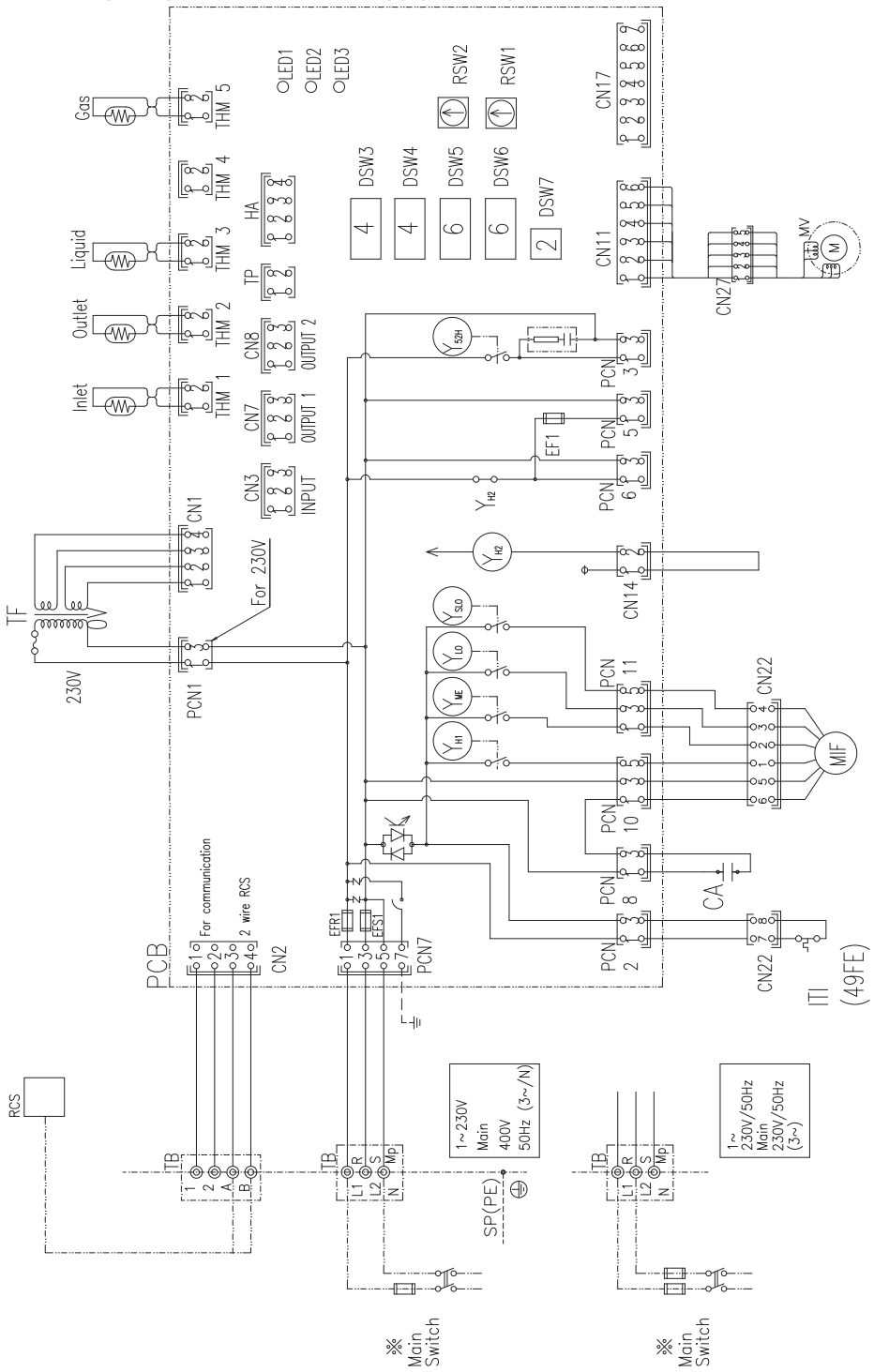

Printed Circuit Board

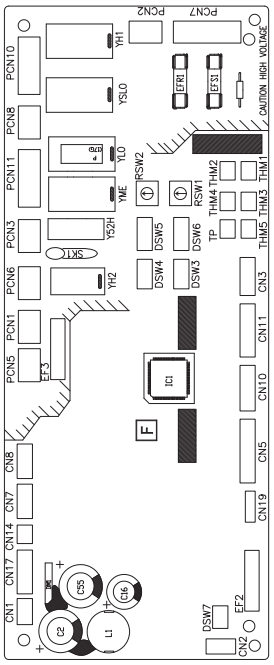

Mark Table

Mark	Part Name
CA	Capacitor for Indoor Fan
CN1~n	Connectors
DSW3	Unit Capacity Code
DSW4	Model
DSW5	Refrigerant Cycle n°
DSW6	Unit Code
DSW7	Fuse Recover/Remot Controller Selector
EFR1	Fuse
EFS1	Fuse
ITI	Internal Thermostat for Indoor Fan Motor
LD1~3	Alarm Code
MIF	Motor for Indoor Fan
MV	Expansion valve
PCB	Printed Circuit Board
RCS	Remote Control Switch
RSW1	Indoor Unit no. Settings
RSW2	Refrigerant Cycle n°
SSW	Slide Switch
TB	Terminal Board
THM1	Inlet Air Thermistor
THM2	Outlet Air Thermistor
THM3	Liquid Pipe Thermistor
THM5	Gas Pipe Thermistor
TF	Transformer
YME	Relay for ME Fan Motor Tap
YLO	Relay for LO Fan Motor Tap
YSLO	Relay for SLO Fan Motor Tap
YH1	Relay for Hi Fan Motor Tap
◎	Terminals
———	Factory Wiring
- - - - - -	Earth Wiring
—·—·—	Field Wiring
※	Field Connection

Electrical Control Box of Indoor Unit

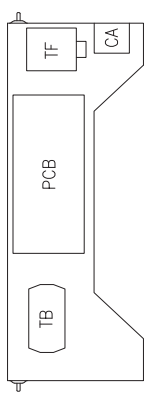

4.3.2 Wiring diagrams for complementary systems

◆ KPI-(252-802)(E/H)2E energy / heat recovery unit

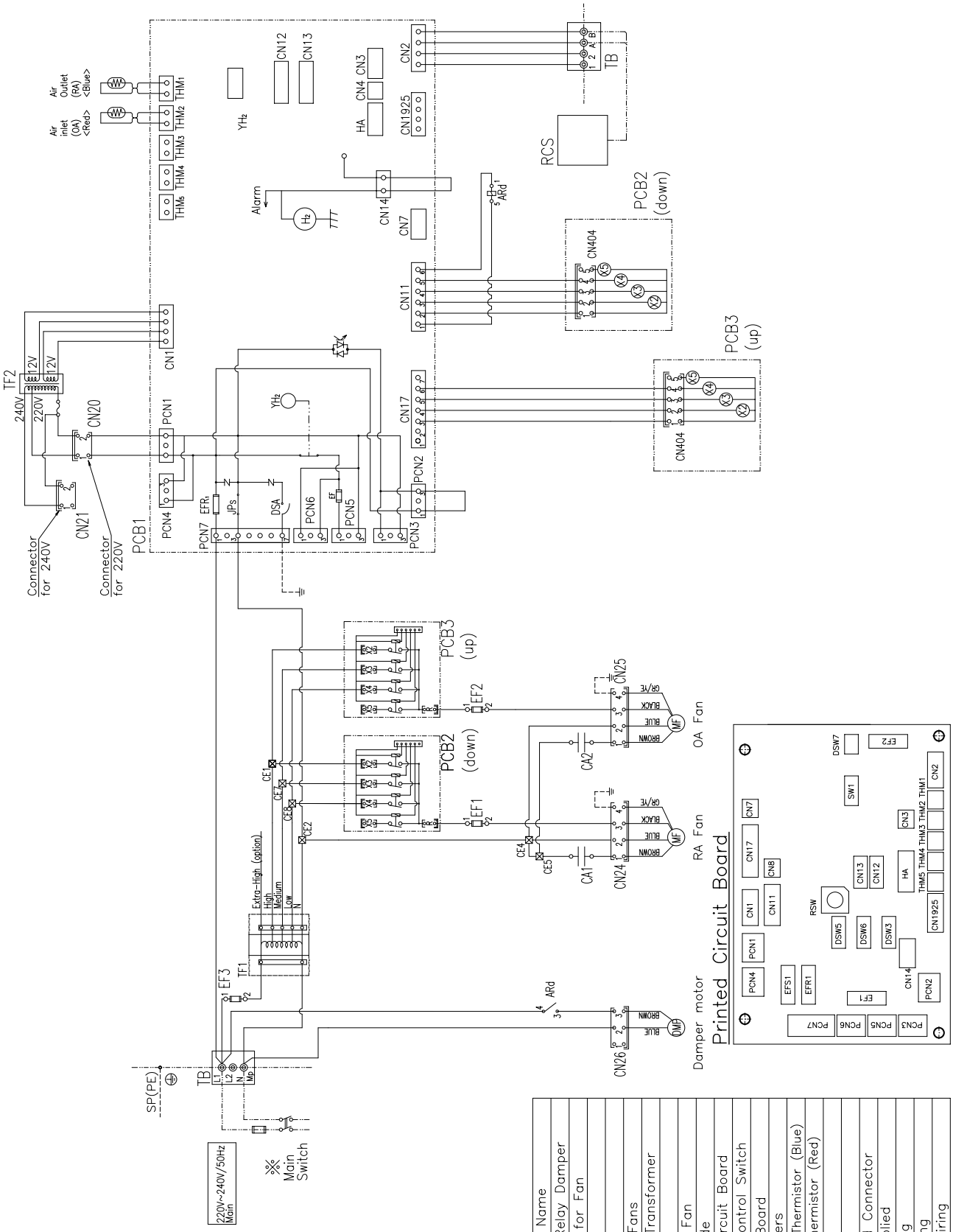

Mark Table

Mark	Part Name
ARd	Auxiliary Relay Damper
CA1,2	Capacitor for Fan
CN_n	Connector
PCN_n	Connector
EF1,2	Fuse for Fans
EF3	Fuse for Transformer
EFR_1	Fuse
MF	Motor for Fan
$LED_{1\sim n}$	Alarm Code
PCB1,2,3	Printed Circuit Board
RCS	Remote Control Switch
TB	Terminal Board
TF1,2	Transformers
THM1	Outlet Air Thermistor (Blue)
THM2	Inlet Air Thermistor (Red)
DM	Damper
◎	Terminals
⊠	Close-end Connector
※	Field Supplied
------	Field Wiring
------	Earth Wiring
——	Factory Wiring

HITACHI
Inspire the Next

◆ KPI-(1002-2002)(E/H)2E energy / heat recovery unit

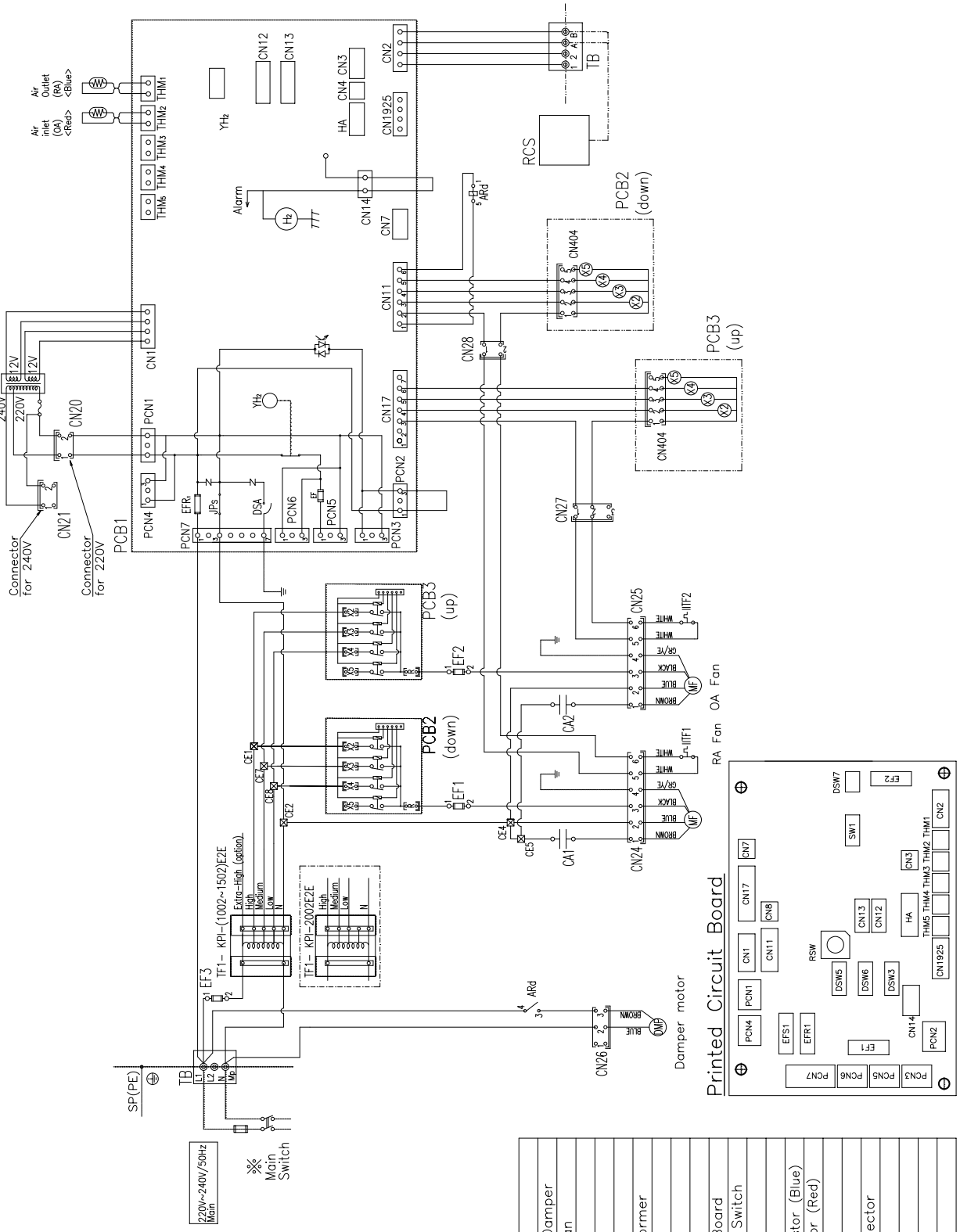

Mark Table

Mark	Part Name
ARd	Auxiliary Relay Damper
CA1,2	Capacitor for Fan
CN_n	Connector
PCN_n	Connector
EF1,2	Fuse for Fans
EF3	Fuse for Transformer
EFR_1	Fuse
MF	Motor for Fan
$LED_{1\sim n}$	Alarm Code
PCB1,2,3	Printed Circuit Board
RCS	Remote Control Switch
TB	Terminal Board
TF1,2	Transformers
THM1	Outlet Air Thermistor (Blue)
THM2	Inlet Air Thermistor (Red)
DM	Damper
◎	Terminals
—⊠—	Close-end Connector
※	Field Supplied
·····	Field Wiring
------	Earth Wiring
——	Factory Wiring

◆ KPI-3002H2E heat recovery unit

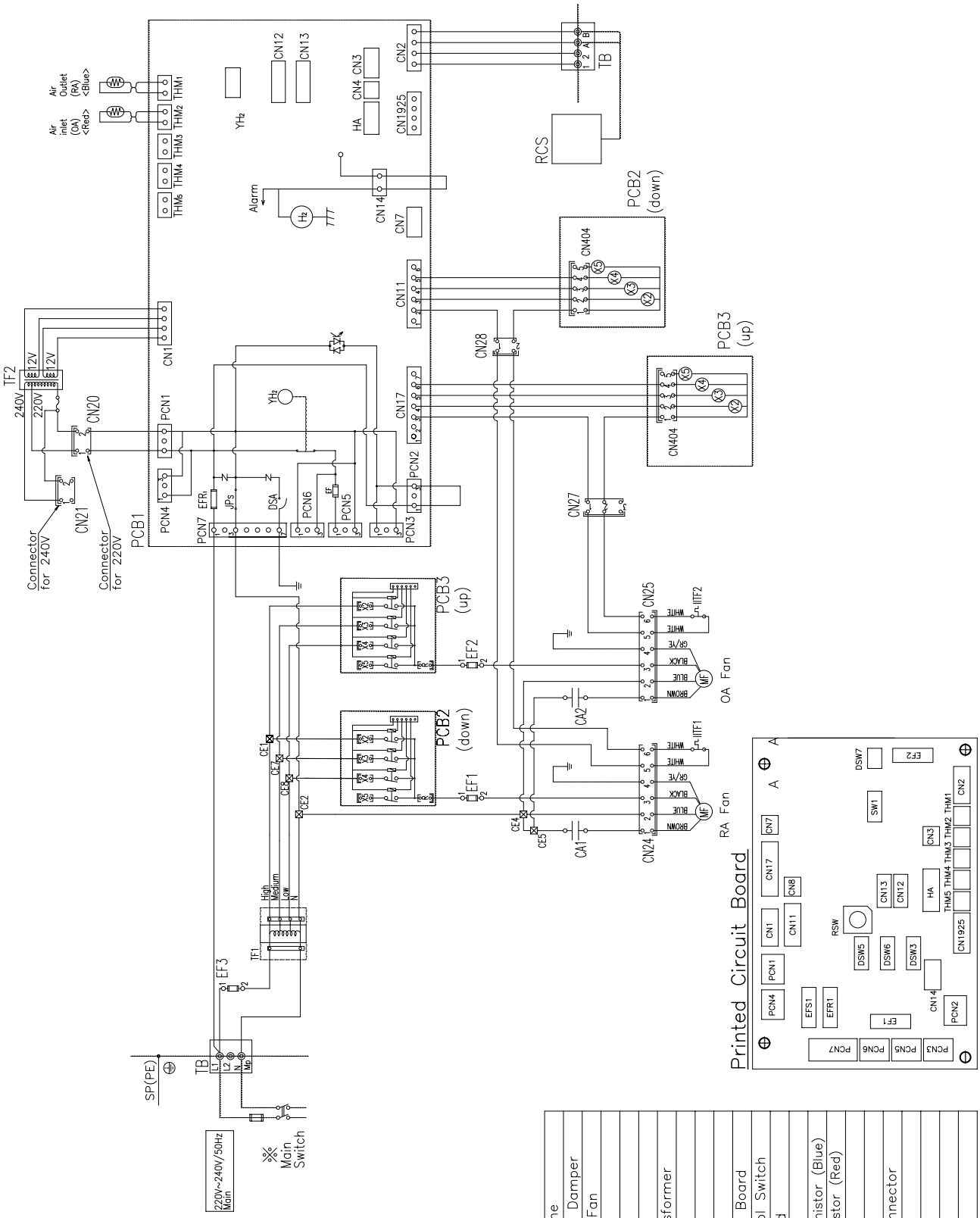

Mark Table

Mark	Part Name
ARd	Auxiliary Relay Damper
CA1,2	Capacitor for Fan
CN_n	Connector
PCN_n	Connector
EF1,2	Fuse for Fans
EF3	Fuse for Transformer
EFR_1	Fuse
MF	Motor for Fan
$LED_{1\sim n}$	Alarm Code
PCB1,2,3	Printed Circuit Board
RCS	Remote Control Switch
TB	Terminal Board
TF1,2	Transformers
THM1	Outlet Air Thermistor (Blue)
THM2	Inlet Air Thermistor (Red)
DM	Damper
◎	Terminals
⊠	Close-end Connector
※	Field Supplied
------	Field Wiring
———	Earth Wiring
———	Factory Wiring

HITACHI
Inspire the Next

◆ DX-Interface EXV-2.0E-6.0E

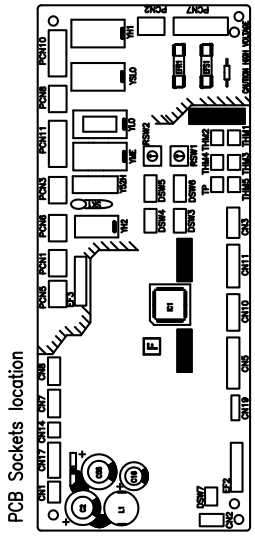

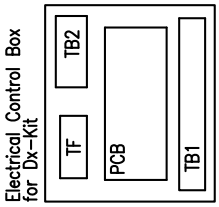

Mark Table

Mark	Part Name	Remarks
CN20~24	Connector	
DSW3	Unit Capacity Code	On PCB
DSW4	Model	On PCB
DSW5	Refrigerant Cycle n°	On PCB
DSW6	Unit Code	On PCB
DSW7	Fuse Recover / Remote Controller Selector	On PCB
EFR1	Fuse	On PCB
EFS1	Fuse	On PCB
MV	Expansion Valve	
LED1~3	Alarm Code	On PCB
PCB	Printed Circuit Board	
RCS	Remote Control Switch	Optional Part
RSW1	Indoor Unit no. Settings	On PCB
RSW2	Refrigerant Cycle n°	On PCB
SSW	Slide Switch	On PCB
TB1,2	Terminal Board	
TF	Transformer	
THM1	Inlet Air Thermistor	On PCB
THM2	Outlet Air Thermistor	On PCB
THM3	Liquid Pipe Thermistor	On PCB
THM5	Gas Pipe Thermistor	On PCB
YH1	Relay for Drain Motor	DC Coil
YH2	Relay for HI Fan Motor Tap	DC Coil
YME	Relay for ME Fan Motor Tap	DC Coil
YLO	Relay for LO Fan Motor Tap	DC Coil
YSLO	Relay for SLO Fan Motor Tap	DC Coil
YS2H	Relay for Electric Heater	DC Coil
●	Terminals	
—⊠—	Close-end Connector	
—✱—	Field Supplied	
-·-·-	Field Wiring	
----	Earth Wiring	
——	Factory Wiring	

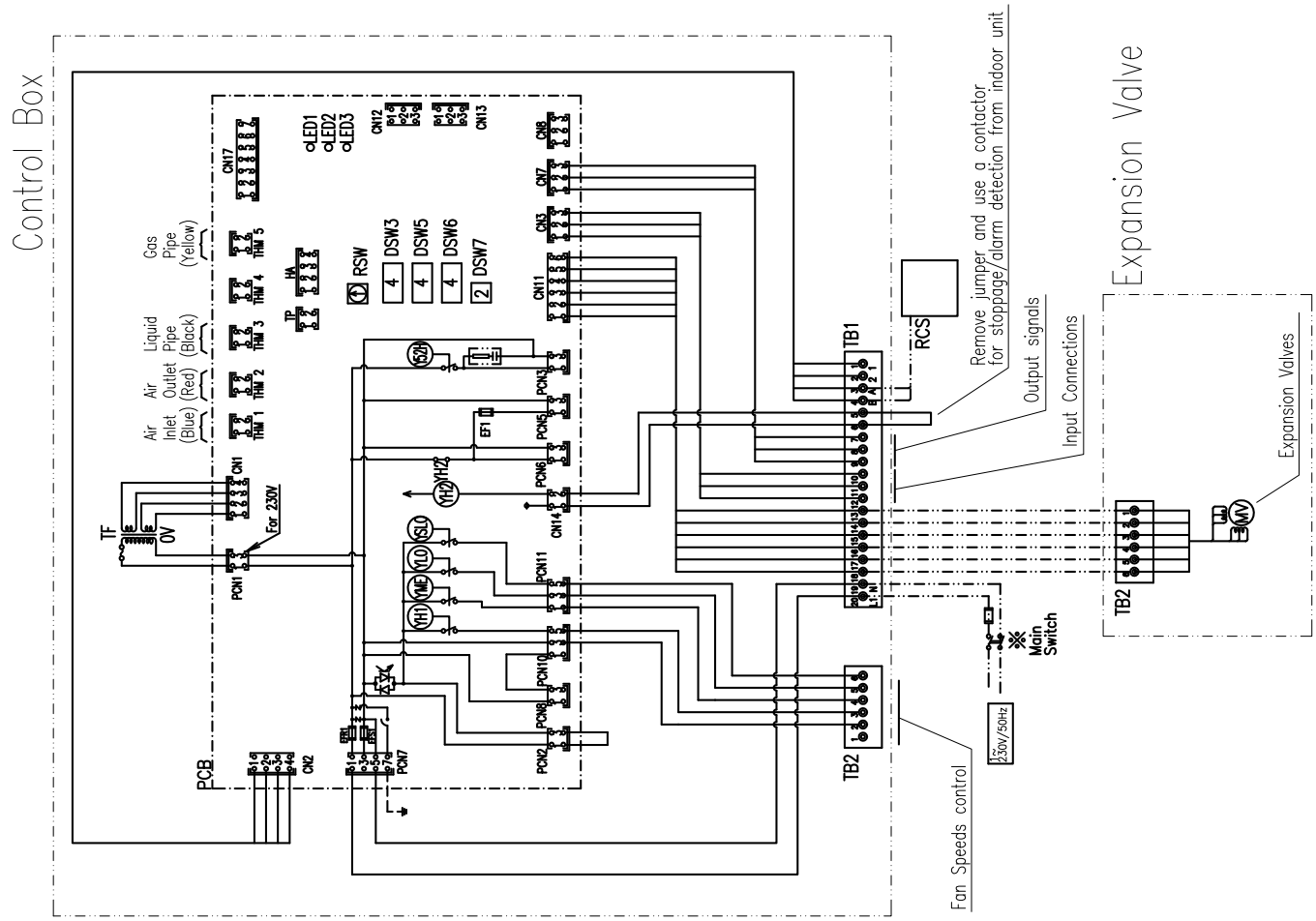

◆ DX-Interface EXV-8.0/10.0E

PCB Sockets location

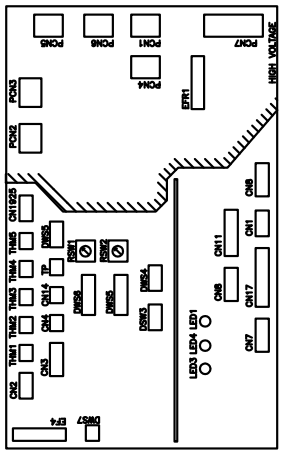

Electrical Control Box for Indoor Unit

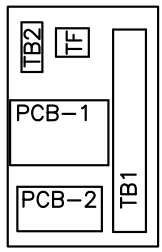

Mark Table

Mark	Part Name	Remarks
CN20~n	Connector	
DSW3	Unit Capacity Code	On PCB
DSW4	Unit Model Code	On PCB
DSW5	Refrigerant Cycle n°	On PCB
DSW6	Indoor Unit Setting	On PCB
DSW7	Fuse Recover/Remote Controller Selector	On PCB
DSW8	Not Used	On PCB
EFR1	Fuse	On PCB
FS	Float Switch	
MV	Micro-Computer Control Exp. Valve	
LED1~3	Alarm Code	On PCB
PCB−1	Main Printed Circuit Board	
PCB−2	Relay Printed Circuit Board	
X2	High Speed Terminal	On PCB2
X3	Medium Speed Terminal	On PCB2
X4	Low Speed Terminal	On PCB2
X5	S-Low Speed Terminal	On PCB2
RCS	Remote Control Switch	Optional Part
RSW1	Indoor Unit no. Settings	On PCB
RSW2	Refrigerant Cycle no. Settings	On PCB
TB1,2	Terminal Board	
TF	Transformer	
THM1	Inlet Air Thermistor	On PCB
THM2	Outlet Air Thermistor	On PCB
THM3	Liquid Pipe Thermistor	On PCB
THM5	Gas Pipe Thermistor	On PCB
●	Terminals	
—⊠—	Close-end Connector	
✱	Field Supplied	
—··—	Field Wiring	
------	Earth Wiring	
——	Factory Wiring	

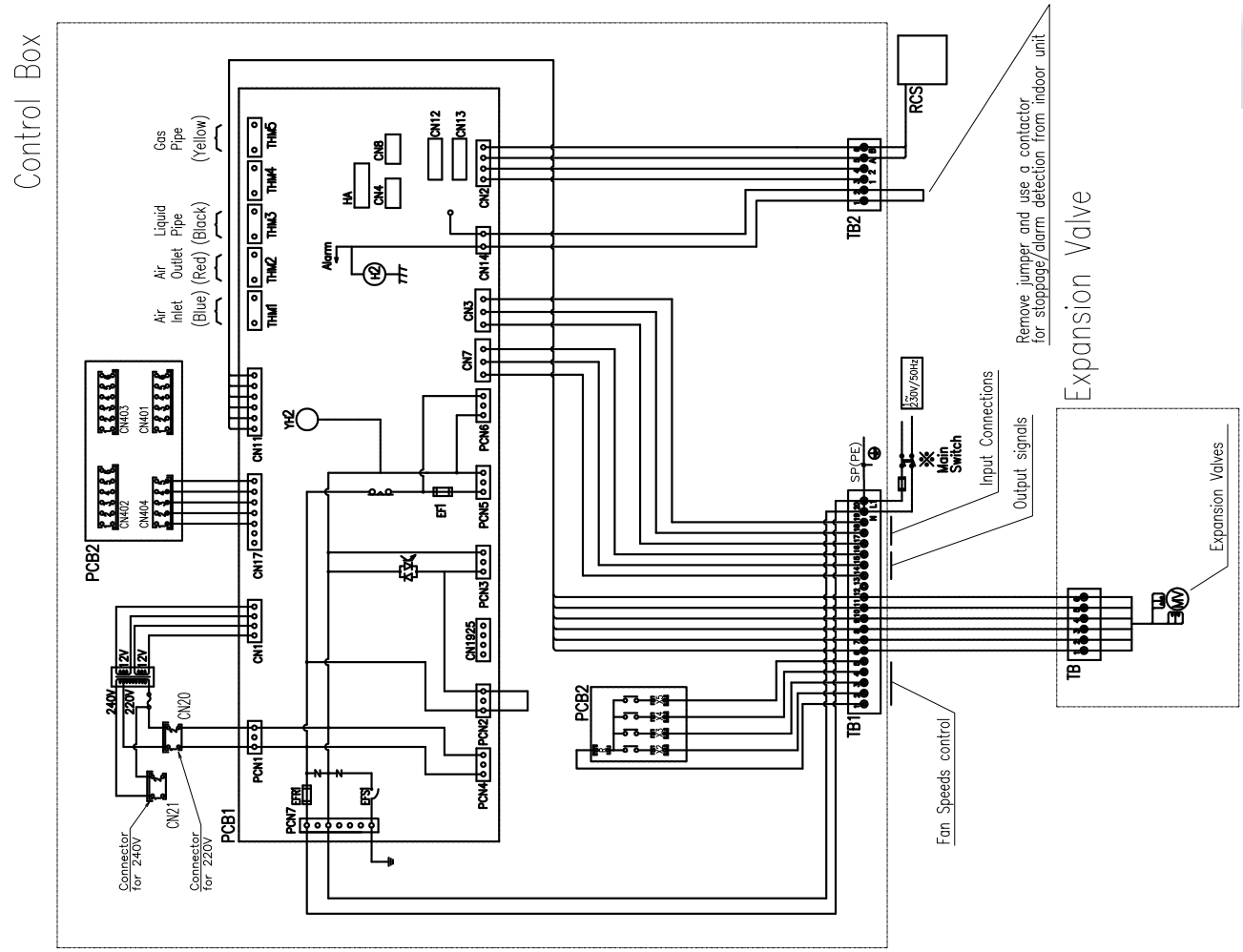

4

HITACHI
Inspire the Next

5. Control system

Index

5.1 Device control system 170

5.1.1 Printed circuit boards for RCI(M) indoor units 171
5.1.2 Printed circuit boards for RCD indoor units 173
5.1.3 Printed circuit board for RPC, RPF(I), RPI(M) units 174
5.1.4 Printed circuit board for RPI-(8.0/10.0)FSN3E units 176
5.1.5 Printed circuit board for RPK-FSN(H)2M units 177
5.1.6 Printed circuit board for KPI complementary systems 179
5.1.7 Printed circuit board for DX-Interface complementary systems 181

5.2 Safety protection and control 183

5.3 Standard control functions 184

5.3.1 Freeze protection during the cooling or dehumidification process 184
5.3.2 Indoor electronic expansion valve control 185
5.3.3 Activation of the control with protection device 186
5.3.4 Automatic cooling/heating operation control 187
5.3.5 Preventive high-pressure increase control 187

5.1 Device control system

Purpose of control	Use		
	Cooling operation	Heating operation	Defrost mode
Compressor control frequency with Inverter	Frequency control is determined with the following parameters: • Difference between the air inlet temperature and the set air temperature. • Calculate the width of the change using the amount of the change.	Frequency control is determined with the following parameters: • Difference between the air inlet temperature and the set air temperature. • Calculate the width of the change using the amount of the change.	Fixed frequency (stop the compressor for 30 s. once defrost is complete).
Degree of opening of the outdoor unit expansion valve	Fully open	The control range for the degree of opening of the expansion valve is determined to optimise the temperature at the top of the compressor.	Fully open
Degree of opening of the indoor unit expansion valve	The control range for the degree of opening of the expansion valve is determined to optimise the difference in temperature of the I.U. gas pipe (Tg) - the temperature of the I.U. liquid piping (Tl).	Degree of opening specified at the start of normal control. Then controlled to optimise the temperature of the I.U. liquid pipe (Tl).	Specified degrees of opening controlled by the temperature at the top of the compressor. (Td).
Outdoor fan	The fan speed operates to control the stabilisation of the O.U. liquid pipe temperature (Te); (Te) stabilisation control	The fan speed is controlled in line with the temperature of the O.U. liquid pipe and the temperature at the top of the compressor.	Fan stoppage.
4-way valve (RVR)	Off	On	Off
Solenoid valve (SVS) (Balanced pressure valve)	Enabled on starting (4-10)H(V)RNSE	Enabled on starting (4-10)H(V)RNSE	Enabled by defrost
High/low pressure balance	• Control by the indoor expansion valve (2-3 HVRN(1)(S) • SVA activation before the compressor is started (4-10)H(V)RNSE	• Control by the outdoor expansion valve (2-3 HVRN(1)(S) • SVA activation before the compressor is started (4-10)H(V)RNSE	

I.U.: indoor unit.

Tc/Te: condensing temperature / evaporating temperature.

Td: Discharge temperature.

Tl: liquid temperature.

Tg: gas temperature.

Cap: capacity.

Temp.: condenser temperature.

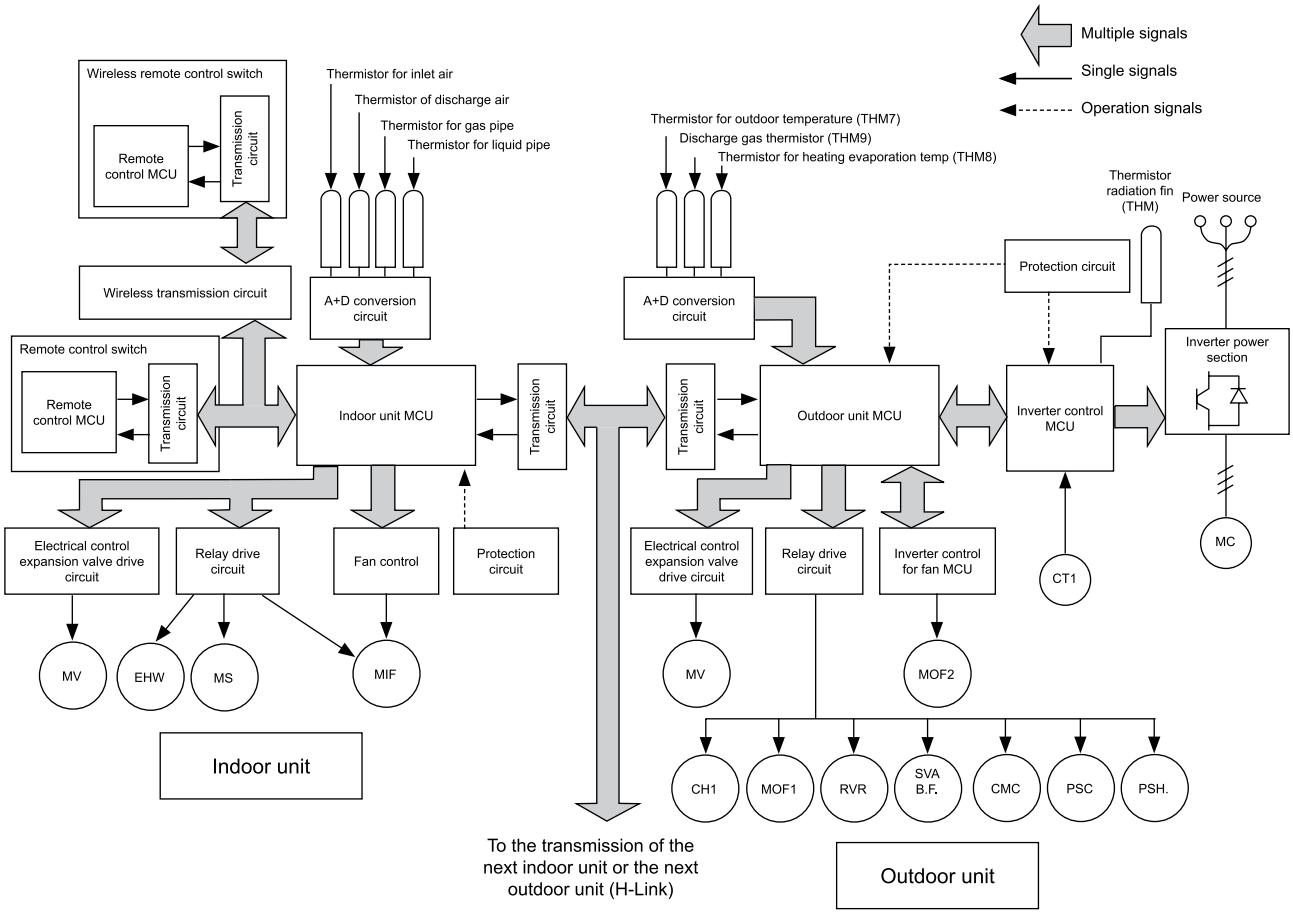

Identifier	Name
MC	Motor (for the compressor)
MIF	Motor (for the indoor fan)
MOF1, 2	Motor (for the outdoor fan)
MS	Motor (for the automatic louver)
MV	Electronic expansion valve
CMC	Magnetic compressor contactor
CH	Crankcase heater
CT1	Current transformer
PSH	High pressure switch
RVR	4-way valve
SVA, B, F	Solenoid valve
PSC	Control pressure switch
EHW	Electric heater
MCU	Microcomputer

5.1.1 Printed circuit boards for RCI(M) indoor units

CAUTION

Turn off the power supply before setting the DIP switches. If not, the settings will not be valid.

NOTE

- ***The symbol "■" indicates the position of the DIP switches. The figures show the setting before transmission or after selection.***
- ***If the "■" mark is not displayed, this indicates that the position of the pin is not affected.***

The indoor unit PCB operates with five types of DIP switches and two rotary switches. The position is as follows:

PCB1

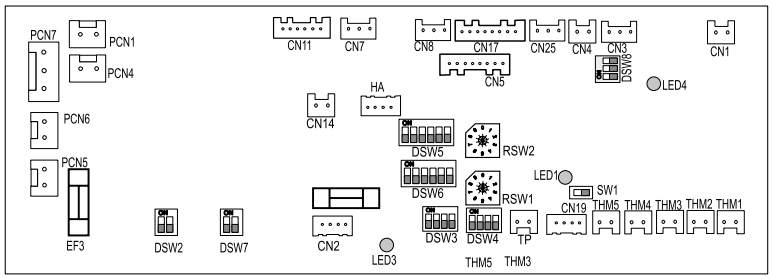

PCB2

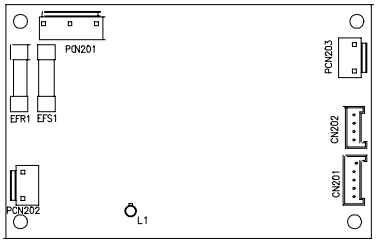

PCB3

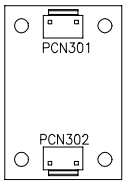

LED indicator		
LED1	Red	This LED indicates the transmission status between the indoor unit and the remote control.
LED3	Yellow	This LED indicates the transmission status between the indoor unit and the outdoor unit.
LED4	Red	PCB power supply

Connector indication	
PCN1	220 V transformer
PCN5	Electric heater for dew protection
PCN6	Drain pump motor
PCN7	Power supply (1-R, 3-S)
PCN201	Power supply (1-R, 3-S)
PCN202	Power supply (1-R, 3-S)
PCN203	DC motor control
PCN301	Terminal board connections
PCN302	PCB2 connection
THM1	Air inlet thermistor
THM2	Air outlet thermistor
THM3	Liquid pipe thermistor
THM4	Remote thermistor
THM5	Gas pipe thermistor
CN1	Transformer (pins 1-2: 17.3 V/pins 3-4: 20.8 V)
CN2	Outdoor unit H-LINK II control circuit
CN3	Optional input functions
CN4	Not used
CN7	Optional output functions

Connector indication	
CN8	Optional output functions
CN11	Expansion valve control
CN14	Float switch
CN17	Swing louver motor 4
CN19	PCB2 connection
CN25	Not used
CN201, CN202	PCB1 connection
EFS1	PCB2 fuse
EFR1	PCB2 fuse
EF3	PCB1 fuse
EF2	PCB1 fuse

Switch indication	
DSW3	Capacity code
DSW4	Unit model code
DSW5, RSW2	Refrigerant cycle number
DSW7	Fuse re-establishing
DWS6, RSW1	Indoor unit number settings

5.1.2 Printed circuit boards for RCD indoor units

5

CAUTION

Turn off the power supply before setting the DIP switches. If not, the settings will not be valid.

NOTE

- ***The symbol "■" indicates the position of the DIP switches. The figures show the setting before transmission or after selection.***
- ***If the ■ mark is not displayed, this indicates that the position of the pin is not affected.***

The indoor unit PCB operates with five types of DIP switches and two rotary switches. The position is as follows:

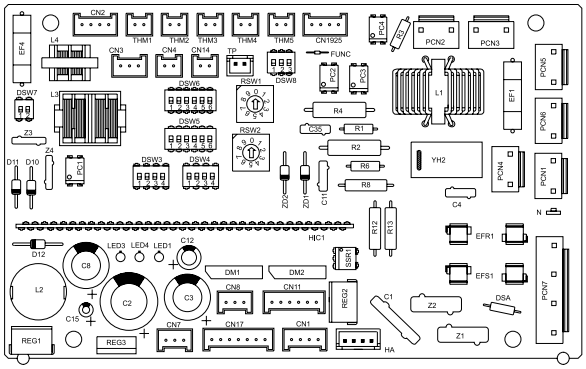

LED indicator		
LED1	Red	This LED indicates the transmission status between the indoor unit and the remote control.
LED3	Yellow	This LED indicates the transmission status between the indoor unit and the outdoor unit.
LED4	Red	PCB power supply

Connector indication	
PCN1	220 V transformer
PCN5	Electric heater for dew protection
PCN6	Drain pump motor
PCN7	Power supply (1-R, 3-S)
PCN201	Power supply (1-R, 3-S)
PCN202	Power supply (1-R, 3-S)
PCN203	DC motor control
THM1	Air inlet thermistor
THM2	Air outlet thermistor
THM3	Liquid pipe thermistor
THM4	Remote thermistor
THM5	Gas pipe thermistor
CN1	Transformer (pins 1-2: 17.3 V/pins 3-4: 20.8 V)
CN2	Outdoor unit H-LINK II control circuit
CN3	Optional input functions
CN4	Not used
CN7	Optional output functions
CN8	Optional output functions
CN11	Expansion valve control
CN14	Float switch
CN17	Swing louver motor 4
CN201	PCB1 connection
EFS1	PCB2 fuse
EFR1	PCB2 fuse
EF1	PCB1 fuse
EF4	PCB1 fuse
Switch indication	
DSW3	Capacity code
DSW4	Unit model code
DSW5, RSW2	Refrigerant cycle number
DSW7	Fuse re-establishing
DWS6, RSW1	Indoor unit number settings

5.1.3 Printed circuit board for RPC, RPF(I), RPI(M) units

CAUTION

Turn off the power supply before setting the DIP switches. If not, the settings will not be valid.

NOTE

- ***The following information is not valid for RPI-(8.0/10.0)FSN3E indoor units.***
- ***The symbol "■" indicates the position of the DIP switches. The figures show the setting before transmission or after selection.***
- ***If the "■" mark is not displayed, this indicates that the position of the pin is not affected.***

The indoor unit PCB operates with four types of DIP switches, a slide switch and a rotary switch. The position is as follows:

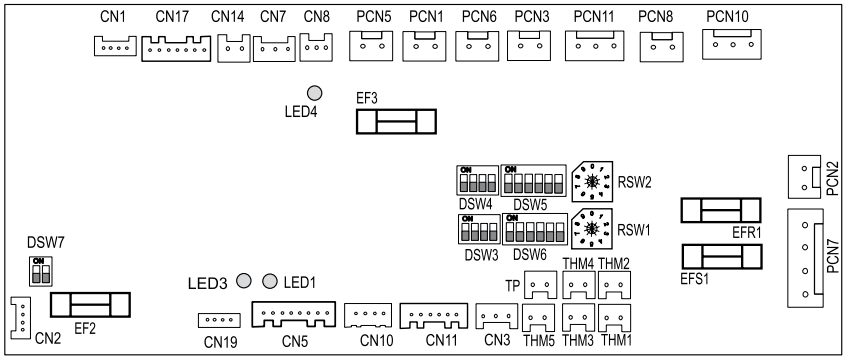

LED indicator		
LED1	Red	This LED indicates the transmission status between the indoor unit and the remote control.
LED3	Yellow	This LED indicates the transmission status between the indoor unit and the outdoor unit.
LED4	Green	PCB power supply

Connector indication	
PCN1	220 V transformer
PCN2	Indoor fan motor internal thermostat
PCN3	Not used
PCN5	Not used
PCN6	Drain pump motor (RPI)
PCN7	Power supply (1-R, 2-S, 3-N, 4-E)
PCN8	Capacitor
PCN10	Fan motor power supply
PCN11	Fan motor speed control
PCN301	Terminal board connections
PCN302	PCB2 connection
THM1	Air inlet thermistor
THM2	Air outlet thermistor
THM3	Liquid pipe thermistor
THM4	Remote thermistor (THM-R2 AE)
THM5	Gas pipe thermistor
TP	Not used
EF3	Fuse
EF2	Fuse
EFS1	Fuse
EFR2	Fuse
CN1	Transformer (pins 1-2: 17.3 V/pins 3-4: 20.8 V)
CN2	Outdoor unit H-LINK control circuit
CN3	Optional input functions (only 2)
CN7	Optional output functions (only 2)
CN8	Optional output functions (no. 1, no. 2, only 1)
CN11	Expansion valve control
CN12	Remote control jumper connection for several units
CN13	SW remote control
CN14	Float switch (RPI)
CN17	Swing louver motor

Switch indication	
DSW3	Capacity code
DSW4	Unit model code
DSW5, RSW2	Refrigerant cycle number
DSW7	Fuse recovery and remote control selector
DWS6, RSW1	Indoor unit number settings

5.1.4 Printed circuit board for RPI-(8.0/10.0)FSN3E units

CAUTION

Turn off the power supply before setting the DIP switches. If not, the settings will not be valid.

NOTE

- ***The symbol "■" indicates the position of the DIP switches. The figures show the setting before transmission or after selection.***
- ***If the "■" mark is not displayed, this indicates that the position of the pin is not affected.***

The indoor unit PCB operates with four types of DIP switches, a slide switch and a rotary switch. The position is as follows:

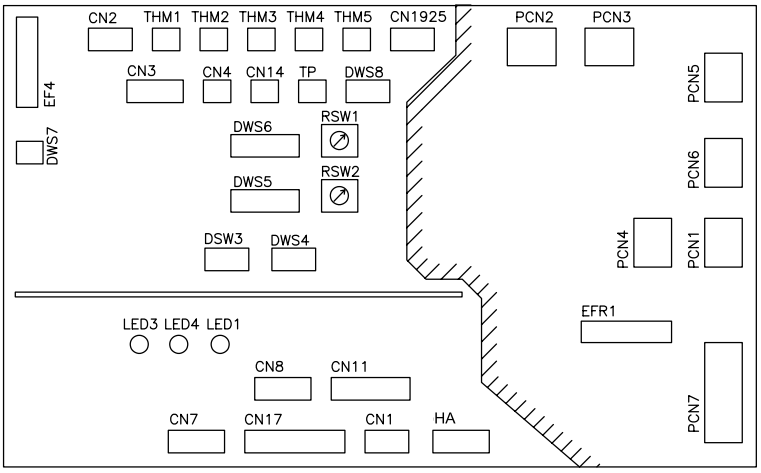

LED indicator		
LED1	Red	This LED indicates the transmission status between the indoor unit and the remote control.
LED3	Yellow	This LED indicates the transmission status between the indoor unit and the outdoor unit.
LED4	Green	PCB power supply

Connector indication	
PCN1	220 V transformer
PCN2	Indoor fan motor internal thermostat
PCN3	Fan stoppage alarm signal
PCN6	Drain pump motor (RPI)
PCN7	Power supply (1-R, 2-S, 3-N, 4-E)
THM1	Air inlet thermistor
THM2	Air outlet thermistor
THM3	Liquid pipe thermistor
THM4	Remote thermistor (THM-R2 AE)
THM5	Gas pipe thermistor
TP	Not used

Connector indication	
EFR1	Fuse
EF4	Fuse
CN1	Transformer (pins 1-2: 17.3 V/pins 3-4: 20.8 V)
CN2	Outdoor unit H-LINK control circuit
CN3	Optional input functions (only 2)
CN7	Optional output functions (only 2)
CN8	Optional output functions (no. 1, no. 2, only 1)
CN11	Expansion valve control
CN14	Float switch (RPI)
CN17	Swing louver motor

Switch indication	
DSW3	Capacity code
DSW4	Unit model code
DSW5, RSW2	Refrigerant cycle number
DSW7	Fuse recovery and remote control selector
DWS6, RSW1	Indoor unit number settings
DWS8	Not used

5.1.5 Printed circuit board for RPK-FSN(H)2M units

CAUTION

Turn off the power supply before setting the DIP switches. If not, the settings will not be valid.

NOTE

- ***The symbol "■" indicates the position of the DIP switches. The figures show the setting before transmission or after selection.***
- ***If the ■ mark is not displayed, this indicates that the position of the pin is not affected.***

RPK-(1.0/1.5)FSN(H)2M

The indoor unit PCB operates with four types of DIP switches, a slide switch, a rotary switch and a button switch. The position is as follows:

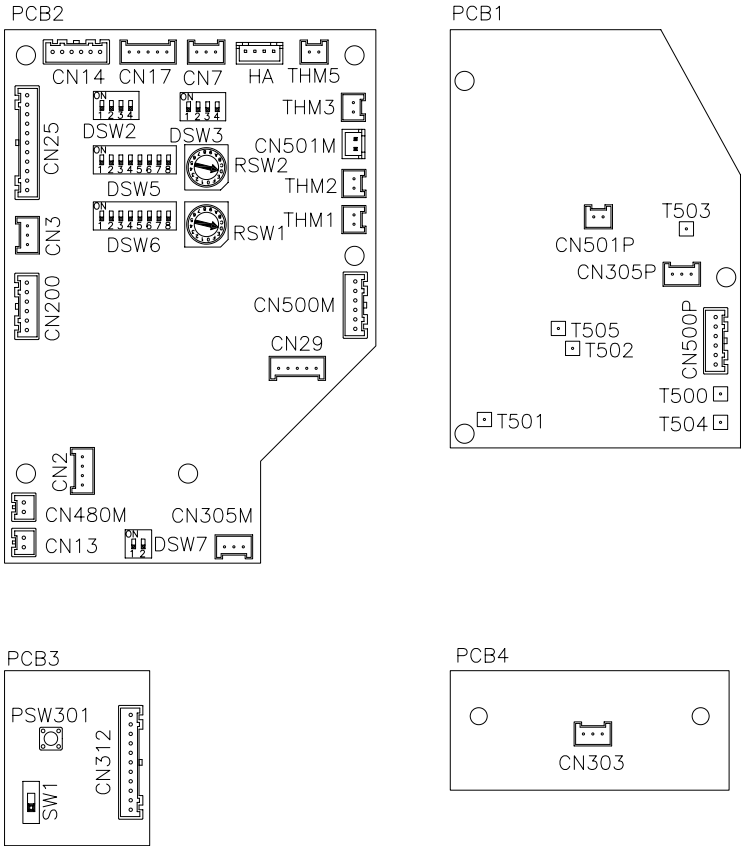

LED indicator		
LED1	Red	This LED indicates the transmission status between the indoor unit and the remote control.
LED3	Yellow	This LED indicates the transmission status between the indoor unit and the outdoor unit.
LED4	Red	PCB power supply

Connector indication	
THM1	Air inlet
THM2	Air outlet
THM3	Freeze protection
THM5	Gas pipe
CN2	Outdoor unit H-LINK control circuit
CN3	Optional input functions
CN7	Optional output functions
CN13	SW remote control
CN14	Expansion valve control
CN17	Swing louver motor
CN25	Connection of the PCB3 wireless receiver part
CN29	Fan motor

Switch indication	
PSW301	Changeover switch for emergency operation
DSW6, RSW1	Indoor unit setting
DSW5, RSW2	Refrigerant cycle number
DSW2	Optional functions

Switch indication	
DSW3	Capacity code
DSW7	Fuse re-establishing

RPK-(2.0/4.0)FSN(H)2M

The indoor unit PCB operates with four types of DIP switches, a slide switch, a rotary switch and a button switch. The position is as follows:

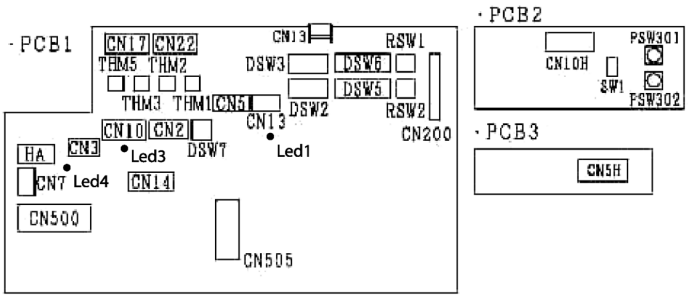

LED indicator		
LED1	Red	This LED indicates the transmission status between the indoor unit and the remote control.
LED3	Yellow	This LED indicates the transmission status between the indoor unit and the outdoor unit.
LED4	Red	PCB power supply

Connector indication	
THM1	Air inlet
THM2	Air outlet
THM3	Freeze protection
THM5	Gas pipe
CN2	Outdoor unit H-LINK control circuit
CN3	Optional input functions
CN5	PCB3 connection
CN7	Optional output functions
CN13	SW remote control
CN14	Expansion valve control
CN17	Swing louver motor
CN10	Connection of the PCB3 wireless receiver part
CN550	Fan motor

Switch indication	
PSW301, PSW302	Changeover switch for emergency operation
DSW6, RSW1	Indoor unit setting
DSW5, RSW2	Refrigerant cycle number
DSW2	Optional functions
DSW3	Capacity code
DSW7	Fuse re-establishing

5.1.6 Printed circuit board for KPI complementary systems

CAUTION

Turn off the power supply before setting the DIP switches. If not, the settings will not be valid.

NOTE

- ***The symbol "■" indicates the position of the DIP switches. The figures show the setting before transmission or after selection.***
- ***If the "■" mark is not displayed, this indicates that the position of the pin is not affected.***

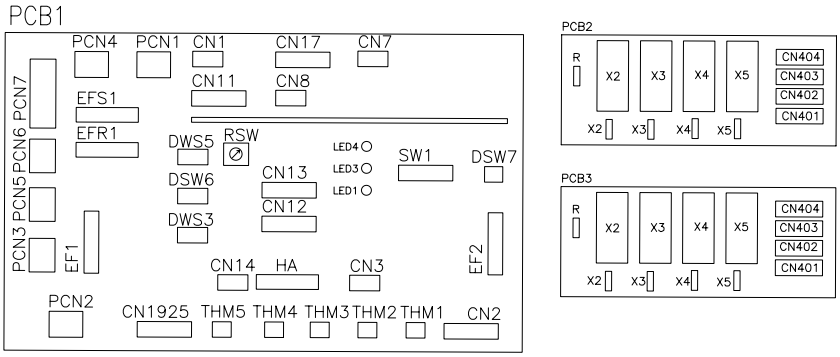

LED indicator		
LED1	Green	PCB power supply
LED3	Yellow	This LED indicates the transmission status between the indoor unit and the remote control.
LED4	Red	This LED indicates the transmission status between the indoor unit and the outdoor unit.

Connector indication	
PCN1	220 V transformer
PCN5	PCB1 relay
PCN7	Power supply (1-R, 2-S, 3-N, 4-E)
THM1	Air inlet
THM2	Air outlet
EF1	Fuse
EF2	Fuse
EFS1	Fuse
EFR1	Fuse
CN1	Transformer (pins 1-2: 17.3 V/pins 3-4: 20.8 V)
CN2	Outdoor unit H-LINK control circuit
CN3	Optional input functions (only 2)
CN4	Optional input functions
CN7	Optional output functions (only 2)
CN8	Optional output functions (no. 1, no. 2, only 1)
CN11	PCB3 connection
CN12	Remote control jumper connection for several units
CN13	SW remote control
CN17	PCB2 connection
CN401	Fan motor relay
CN402	Fan motor relay
CN403	Fan motor relay
CN404	Fan motor relay

Switch indication	
DSW3	Capacity code
DSW5	Refrigerant cycle number
DSW6	Unit model code
DSW7	Fuse recovery and remote control selector
RSW	Indoor unit number settings
SW1	Switch (PC-ART or PC-P2HTE)

5.1.7 Printed circuit board for DX-Interface complementary systems

Dips switches location is the following:

DX-Interface EXV-(2.0-6.0)E

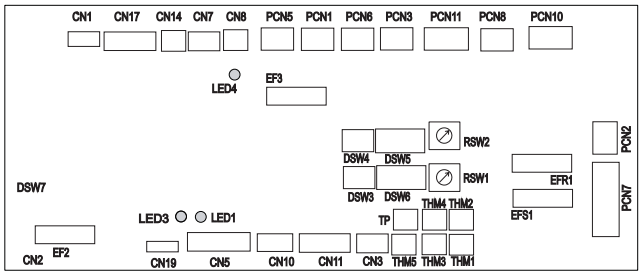

DX-Interface EXV-(8.0/10.0)E

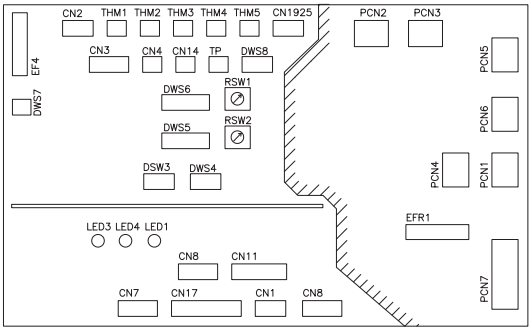

5

CAUTION

Before setting DIP switches, firstly turn off power source and set the position of the dips switches. If the switches are set without turning off the power source, the contents of the setting are invalid.

LED indicator		
LED1	Green	PCB power supply
LED3	Yellow	This LED indicates the transmission status between the indoor unit and the remote control.
LED4	Red	This LED indicates the transmission status between the indoor unit and the outdoor unit.

Connector indication		
	DX-Interface EXV-(2.0-6.0)E	DX-Interface EXV-(8.0/10.0)E
PCN1	220 V transformer	220 V transformer
PCN2	Indoor fan motor internal thermostat	Indoor fan motor internal thermostat
PCN3	Not used	Fan stoppage alarm signal
PCN5	Not used	-
PCN6	Drain pump motor (RPI)	Drain pump motor (RPI)
PCN7	Power supply (1-R, 2-S, 3-N, 4-E)	Power supply (1-R, 2-S, 3-N, 4-E)
PCN8	Capacitor	-
PCN10	Fan motor power supply	-
PCN11	Fan motor speed control	-
PCN301	Terminal board connections	-
PCN302	PCB2 connection	-
THM1	Air inlet thermistor	Air inlet thermistor
THM2	Air outlet thermistor	Air outlet thermistor
THM3	Liquid pipe thermistor	Liquid pipe thermistor
THM4	Remote thermistor (THM-R2 AE)	Remote thermistor (THM-R2 AE)
THM5	Gas pipe thermistor	Gas pipe thermistor
TP	Not used	Not used

Connector indication		
	DX-Interface EXV-(2.0-6.0)E	DX-Interface EXV-(8.0/10.0)E
EF2	Fuse	-
EF3	Fuse	-
EF4	-	Fuse
EFS1	Fuse	
EFR1	-	Fuse
EFR2	Fuse	-
CN1	Transformer (pins 1-2: 17.3 V/pins 3-4: 20.8 V)	Transformer (pins 1-2: 17.3 V/pins 3-4: 20.8 V)
CN2	Outdoor unit H-LINK control circuit	Outdoor unit H-LINK control circuit
CN3	Optional input functions (only 2)	Optional input functions (only 2)
CN7	Optional output functions (only 2)	Optional output functions (only 2)
CN8	Optional output functions (no. 1, no. 2, only 1)	Optional output functions (no. 1, no. 2, only 1)
CN11	Expansion valve control	Expansion valve control
CN12	Remote control jumper connection for several units	-
CN13	SW remote control	-
CN14	Float switch (RPI)	Float switch (RPI)
CN17	Swing louver motor	Swing louver motor

Switch indication		
	DX-Interface EXV-(2.0-6.0)E	DX-Interface EXV-(8.0/10.0)E
DSW3	Capacity code	Capacity code
DSW4	Unit model code	Unit model code
DSW5, RSW2	Refrigerant cycle number	Refrigerant cycle number
DSW7	Fuse recovery and remote control selector	Fuse recovery and remote control selector
DWS6, RSW1	Indoor unit number settings	Indoor unit number settings
DSW8	-	Not used

5.2 Safety protection and control

Compressor protection

The compressor is protected by the following devices:

- **High pressure switch:** this stops the compressor when the discharge pressure exceeds the set value.
- **Oil heater:** this prevents oil from being lost during cold starts, as it is enabled while the compressor is at a standstill.
- **Fan motor protection:** internal thermostat located in the fan motor winding. This stops the fan motor when the winding temperature exceeds the set value.

Setting control and safety devices for indoor units

Model			RCI(M)	RCD	RPC	RPIM	RPI	RPK	RPF(I)	Remarks
For the evaporator fan motor: Internal thermostat	Switch off	°C	145±5	130±5	135±5	135±5	140±5	130±5	130±5	Automatic reset, non-adjustable (one per motor)
	Switch on	°C	90±15	83±15	90±15	90±15	90±15	83±15	83±15	
For the control circuit: Fuse capacity	–	A	5							
Freeze protection thermostat:	Switch off	°C	0							
	Switch on	°C	14							
Differential thermostat	–	°C	2							

5.3 Standard control functions

5.3.1 Freeze protection during the cooling or dehumidification process

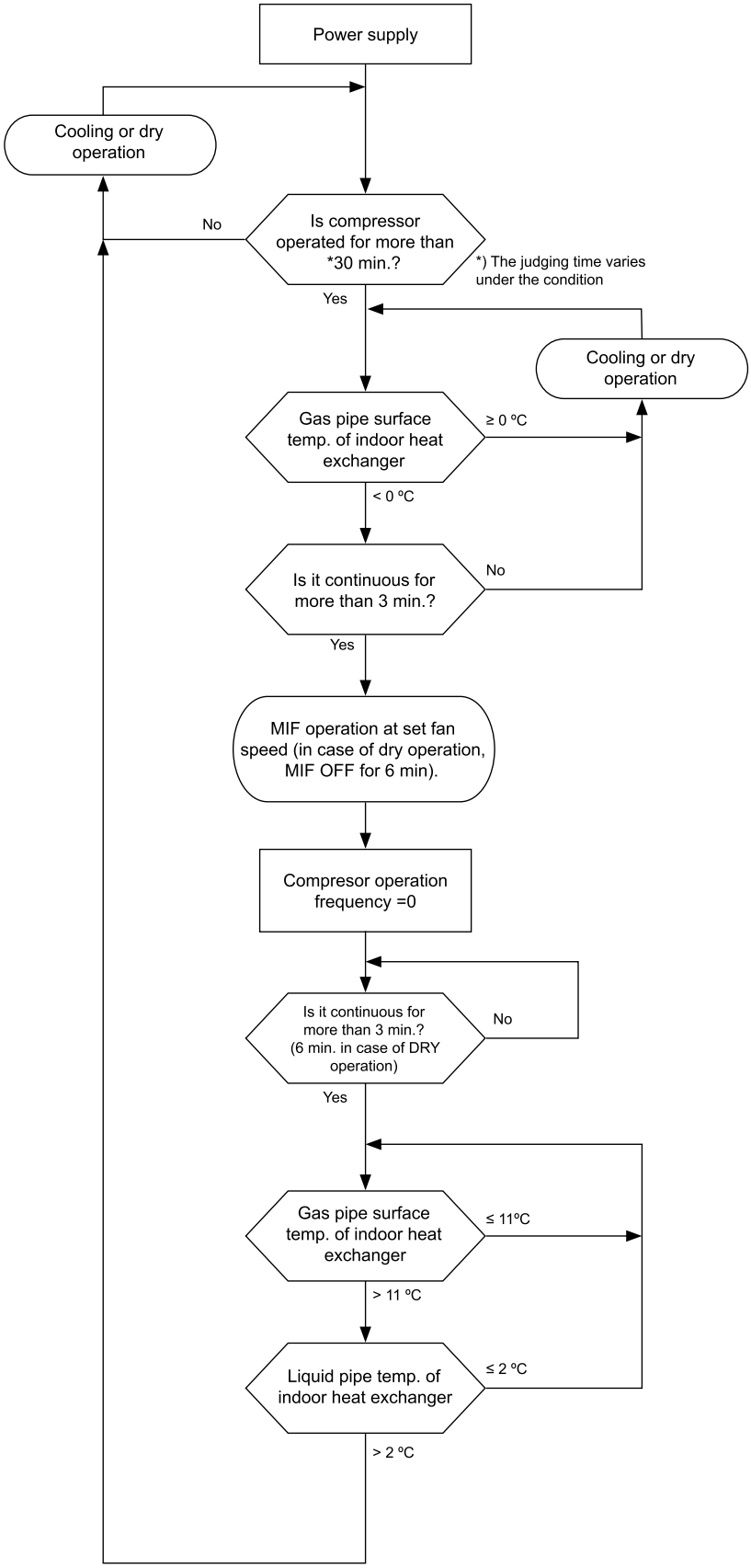

5.3.2 Indoor electronic expansion valve control

1 After supplying power, the electronic expansion valve closes fully before starting to open.
2 When the compressor stops, the electronic expansion valve closes fully to set its opening.
3 When it starts (the compressor is activated), the electronic expansion valve opens to a specific degree during cooling operation, 1 minute.
4 During heating operation, the electronic expansion valve opens to a specific degree.
5 During defrost, the electronic expansion valve opens to a specific degree, as indicated in the graph.
6 Normal opening of the electronic expansion valve.

Time Chart

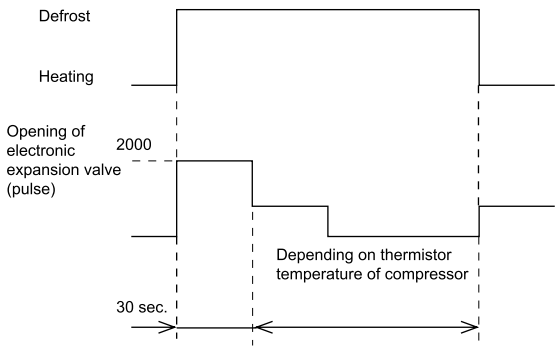

Cooling operation

1 Superheat temperature setting required:
   a Heat exchanger SH:
      • 3 HP => SH = 0 °C
      • 4 HP=> SH = -4 °C
   b Heat exchanger SH = Tg - TL

      Tg: Indoor gas pipe temperature.

      TL: Indoor liquid pipe temperature.

      SH: Superheat.
2 Simulated PI control for the electronic expansion valve. The opening of this valve is controlled so that the SH temperature of the heat exchanger can reach the set temperature.

Heating operation

1 Definition of the set temperature:
   a Heat exchanger SH:

      Ti < TL < 45 + 0.5 x Ta

      TL: Indoor liquid pipe temperature.

      Ti: Indoor air inlet temperature.

      Ta: Outdoor temperature.
2 Simulated PI control for the electronic expansion valve. the opening of the electronic expansion valve is controlled so that the temperature of the indoor liquid pipe can reach the set temperature.

5.3.3 Activation of the control with protection device

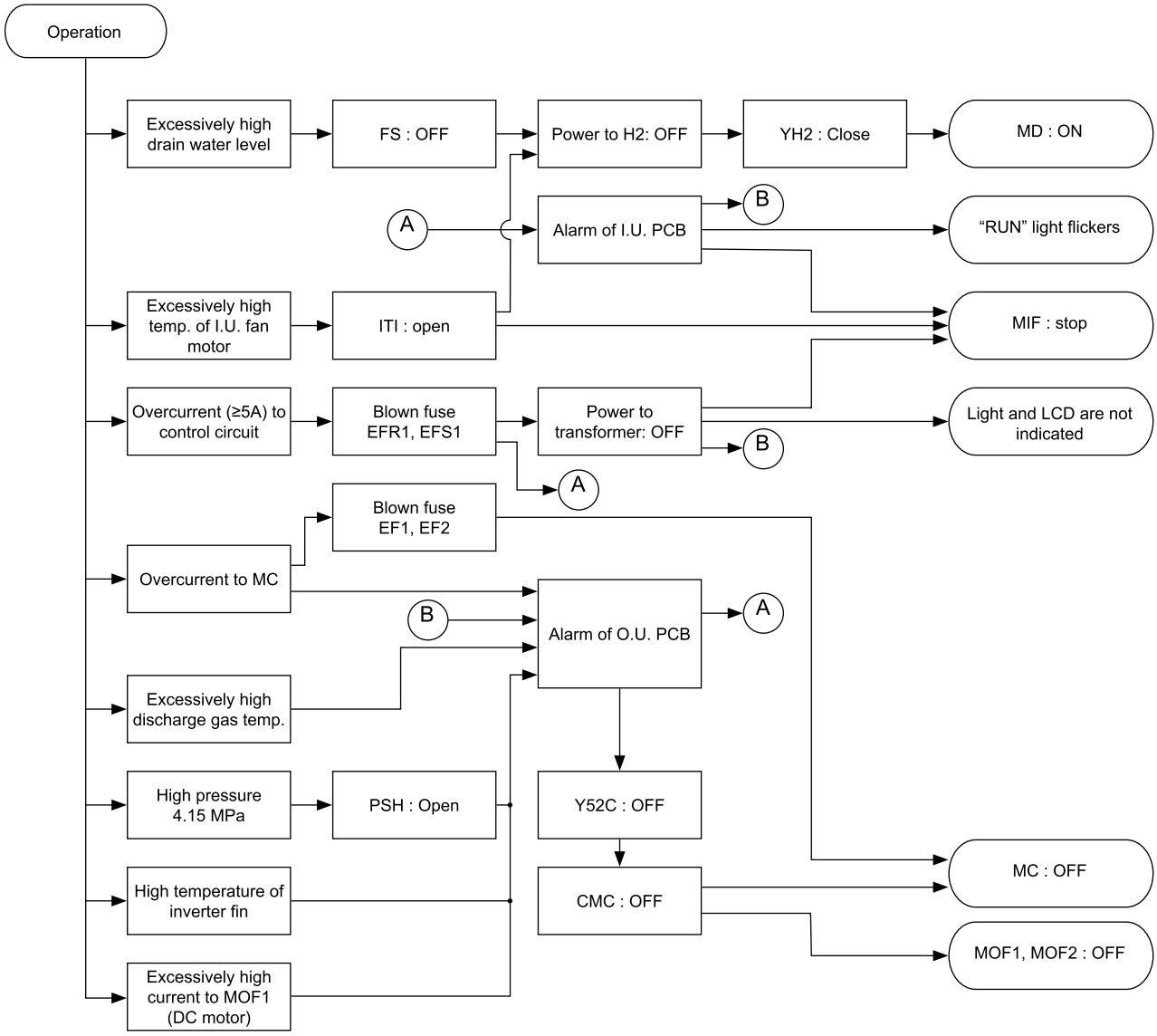

5.3.4 Automatic cooling/heating operation control

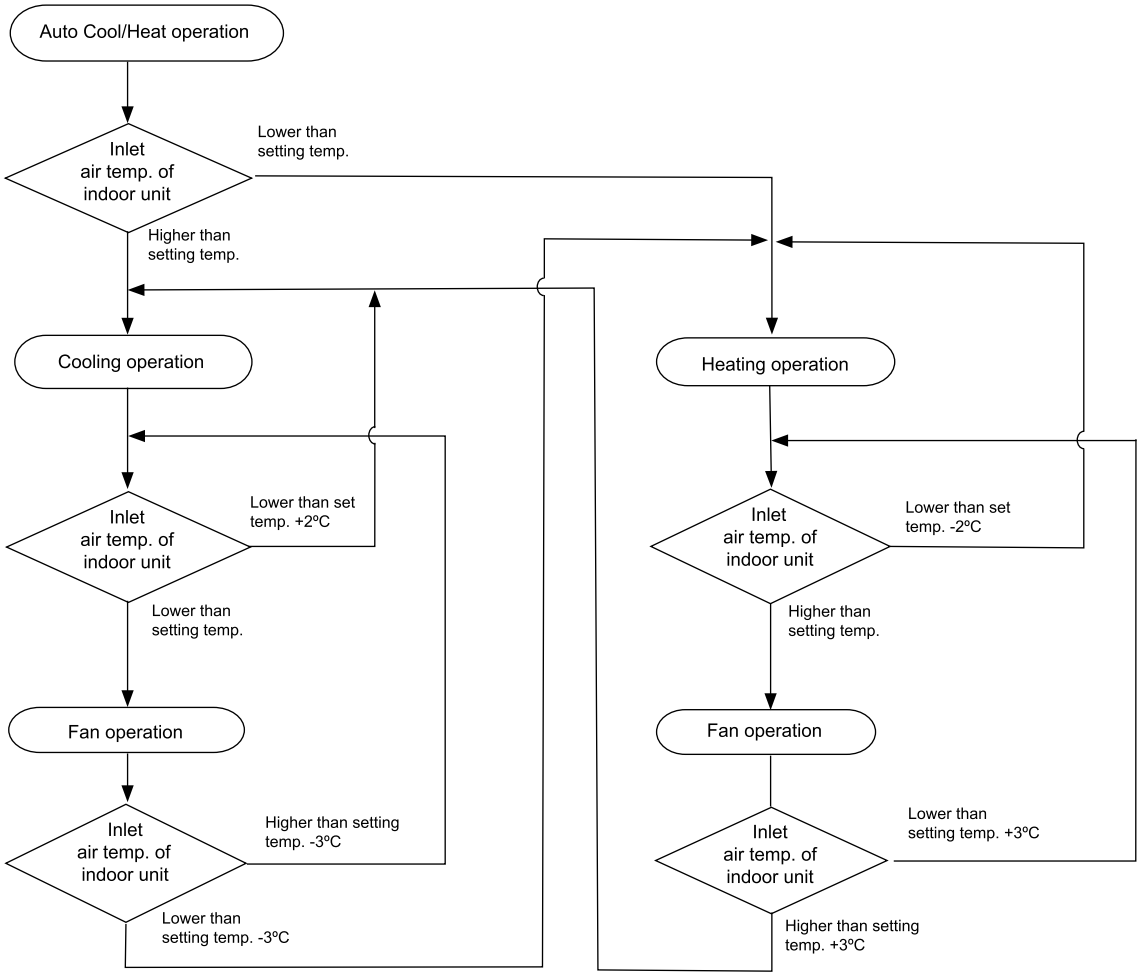

5.3.5 Preventive high-pressure increase control

This function is used to avoid an abnormal condition (alarm: 02) when the outdoor air flow drops due to seasonal winds blowing against the air outlet. When CMC is enabled in cooling operation, PSC is enabled and Tc is greater than Tc1+4 °C, operations with forced thermostat disabling are started.

Tc: Outdoor pipe temperature.

Tc1: Outdoor pipe temperature when the PSC is enabled.

PSC enabled: 3.60 MPa.

However, if this occurs more than 6 times during operations, thermostat stoppage is not forced. The cause of the stoppage will be 13.

HITACHI
Inspire the Next

6. Optional functions

Index

6.1 Indoor units 190
- 6.1.1 Available ports 190
- 6.1.2 Optional signal configuration 191
- 6.1.3 Programming with PC-ART 195
- 6.1.4 Description of optional input signals 196
- 6.1.5 Description of optional output signals 199

6.2 Complementary systems 201
- 6.2.1 KPI 201
- 6.2.2 Econofresh Kit 203
- 6.2.3 DX-Interface 205

6.3 Remote controls 206
- 6.3.1 Optional remote control functions 206
- 6.3.2 List of optional remote control functions 208
- 6.3.3 Description of the optional remote control functions 214
- 6.3.4 Optional functions for PC-ARH remote controls 227
- 6.3.5 Optional functions on wireless remote controls 229

6.1 Indoor units

6.1.1 Available ports

The system has eight optional input signals and six output signals. Both types of signal are programmed into the indoor unit PCB: connector CN3 for input signals and connectors CN7 and CN8 for output signals.

Output connector CN7 has two ports and output connector CN8 has one port, which are used to configure three output options of the eight available in the system.

NOTE

The output signal connection is a mere example.

The system has the following input and output ports:

Indication		Port setting on the indoor unit PCB	Remarks	Outlet
Inlet	i1	CN3 1-2	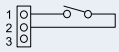	Contact
	i2	CN3 2-3	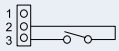	Contact
Outlet	o1	CN7 1-2	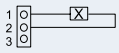	12 Vdc
	o2	CN7 1-3	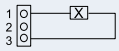	12 Vdc
	o3	CN8 1-2	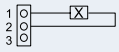	12 Vdc

The system has the following input connections:

Indication	Connections
i1	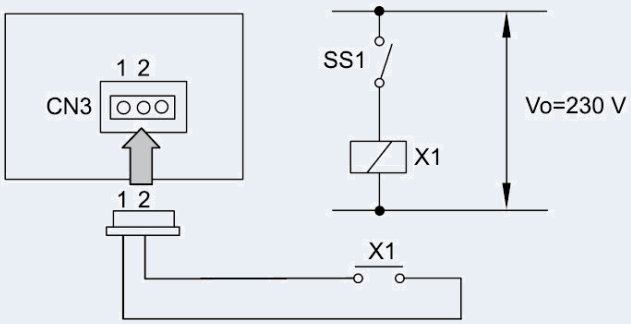
i2	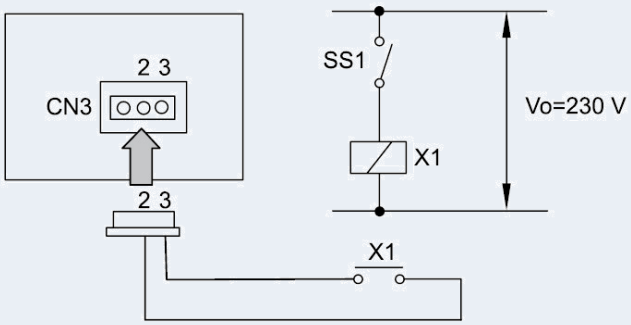

Indication	Connections
o1	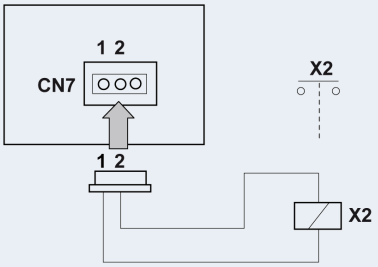
o2	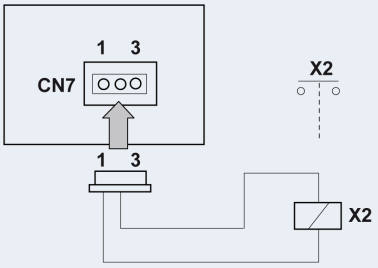
o3	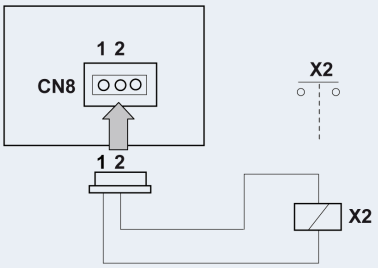

Component		Manufacturer or specifications	Remarks
Auxiliary relay (X2)		Reduced power relay model OMRON: MY1F or equivalent	Voltage between the relay terminals 12 Vdc, 75 mA
Contact (SS1) (x1) (example)		Manual type	Voltage between the contactor terminals 230 V, 5 mA
3-pin connector cable		Optional part PCC-1A (capable of connecting the connector (JST XHP-3)	Five cables with connectors in one group
Cable (control)	Voltage: 12 Vdc	0.5 mm^2	
Cable (power)	Voltage: 230 V	2.0 mm^2	

Recommendations for wiring installation

- Keep the CN3 connector cables as short as possible.
- Try not to pull on the cable along the power line. The cables should be laid separately at a distance of over 30 cm. Cable crossing is feasible.
- Where the cable along the power line is pulled, insert the cables through a metal pipe, earth one end of the pipe and install a safety device such as an earth leakage breaker or smoke detector.

6.1.2 Optional signal configuration

The following tables describe the optional signals available on indoor units. Optional signals are configured using the remote control, except for RPK-(1.0-4.0)FSN2M units in which they are configured using the DIP switches.

Optional input signals

NOTE

If an input signal is set, the on-screen display on the remote control automatically changes to the following.

Indication	Input signal	Application	Remote control screen (input signal)	Port
00	Not set	Not set	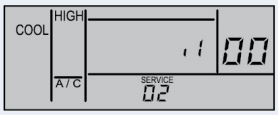	CN3
01	Control by field-supplied room thermostat (cooling)	This signal controls the unit through an external thermostat. **NOTE** ***It can reduce summer cooling problems in certain applications***	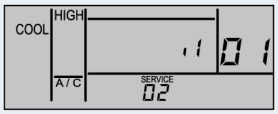	CN3
02	Control by field-supplied room thermostat (heating)	This signal controls the unit through an external thermostat. **NOTE** ***It can reduce problems caused by indoor air stratification.***	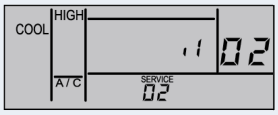	CN3
03	Function 1: remote on/off of the unit (by contact)	This signal controls the starting and stopping of the system from a remote location. **NOTE** ***It is extremely practical in hotels and offices to control the indoor units from the building management system.***	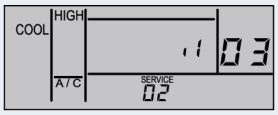	CN3

Indication	Input signal	Application	Remote control screen (input signal)	Port
04	Function 2: unit on (by pulse)	This signal controls the starting of the system from a remote location. **NOTE** ***It is extremely practical in hotels and offices to control the indoor units from the building management system.***	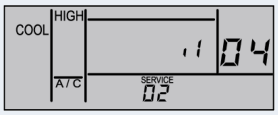	CN3
05	Function 2: unit stoppage (by pulse)	This signal controls the stoppage of the system from a remote location. **NOTE** ***It is extremely practical in hotels and offices to control the indoor units from the building management system.***	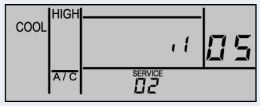	CN3
06	Cancellation of commands from the remote control after a forced stoppage	This signal stops the indoor unit and cancels the commands from the remote control while it is enabled.	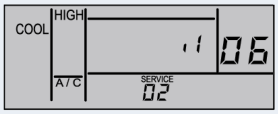	CN3
07	Cooling or heating mode setting	This function controls operating mode changes from a remote location.	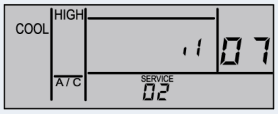	CN3
08	Up/down input signal for grille (not available)	Not available	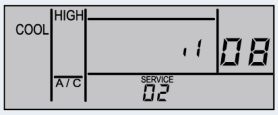	CN3

6

Optional output signals

NOTE

If an output signal is set, the on-screen display on the remote control automatically changes to the following

Indication	Output signal	Application	Remote control screen (input signal)	Port
00	Not set	Not set	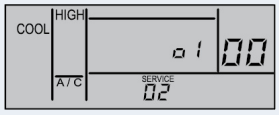	• CN7 or CN8 • Only CN7 for RPK units
01	Operation signal	This signal permanently controls the status of the unit. **NOTE** ***It is extremely useful for centralised applications.***	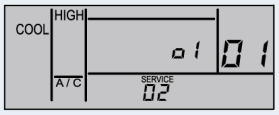	• CN7 or CN8 • Only CN7 for RPK units
02	Alarm signal	This signal enables devices that protect and indicate any faults in the unit. **NOTE** ***It is extremely useful for rooms in which air conditioning must remain on at all times.***	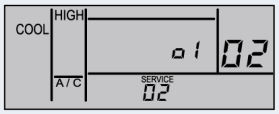	• CN7 or CN8 • Only CN7 for RPK units
03	Cooling signal	This signal controls the status of the compressor. **NOTE** ***It is extremely useful for controlling the thermostat switched off on indoor units.***	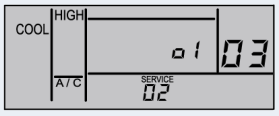	• CN7 or CN8 • Only CN7 for RPK units
04	Thermo-ON signal during cooling	It is extremely useful for controlling requests by the indoor unit to enable the compressor.	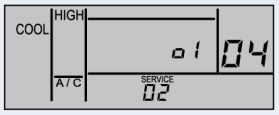	• CN7 or CN8 • Only CN7 for RPK units

Indication	Output signal	Application	Remote control screen (input signal)	Port
05	Heating signal	This signal controls the status of the compressor. It is extremely useful for controlling the thermostat switched off on indoor units.	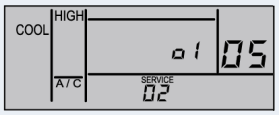	• CN7 or CN8 • Only CN7 for RPK units
06	Thermo-ON signal during heating	It is extremely useful for controlling requests by the indoor unit to enable the compressor.	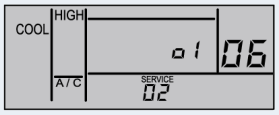	• CN7 or CN8 • Only CN7 for RPK units

6.1.3 Programming with PC-ART

Programming and setting mode

Check that the unit is stopped, if not switch it off. Press the OK and RESET buttons on the remote control at the same time for more than 3 seconds. The screen will display SERVICE and the following indication will flicker: 01.	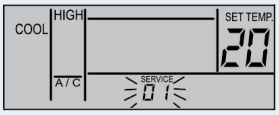

Selection of SERVICE 02

Press TEMP▲ or TEMP▼ to change the value of the number flickering below the SERVICE display.

Select 02 and press the OK button, or maintain the indication for 7 seconds for the remote control to change to the optional setting mode.

Indoor unit selection

a.	In SERVICE 02 mode, the indication changes as shown in the figure. **1** Indication 02 enabled. **2** Indication of the indoor unit on which the optional function is to be set (displayed in the time indication segments for the timer setting and the ADDS indication is displayed below). **3** Indication of the refrigerant cycle number of the outdoor unit on which the optional function is to be set (displayed in the time indication segments for the timer setting and the RN indication is displayed below). **4** The temperature setting display disappears.	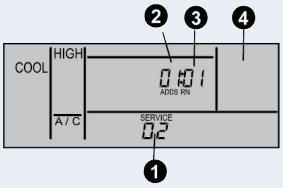
b.	In the previous step (a), press TEMP ▲ or TEMP ▼ on the remote control to select the indoor unit on which the optional function is to be set. **NOTE** • ***The indoor unit can be selected from the indoor units connected to the remote control.*** • ***If the direction and refrigerant cycle number indication is AA, the settings of all the indoor units are the same.***	
c.	After selecting the indoor unit, press the OK button, or maintain the indication for 7 seconds for the remote control to change to the optional setting mode.	

6

Changing the optional signals and setting conditions

a.	In optional setting mode, the remote control indication changes as shown below: **1** The assigned port for the input signal and the output signal are displayed in the time indication segments for the timer setting. See the following table for the indicated port and the PCB connector of the indoor unit. **2** The input and output signal codes are indicated in the temperature setting segments.	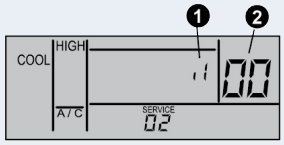
b.	Press the TIME▲ or TIME▼ button on the remote control to select the port to which the input and output signals are to be assigned.	When pressing “Time ▲” 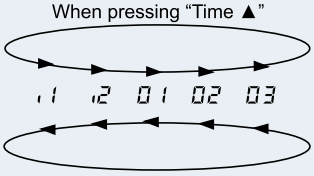 When pressing “Time ▼”
c.	Press the OK button. The port indication in the timer setting time indication segments changes as shown in the figure below.	When pressing the “OK” switch.

Returning from optional function setting mode

Press RESET to store the optional function settings and return to normal mode.

Indoor unit selection

In optional function setting mode, press TEMP ▲ or TEMP ▼ to select the indoor unit on which the optional function is to be set.

Connectors CN3, CN7 and CN8 are factory-set with the following optional functions.

	Connector no.	Connector terminal	Function	Factory settings
Inlet	CN3	1–2	03	Function 1. Remote unit On/Off
		2–3	06	Cancellation of commands from the remote control after a forced stoppage
Outlet	CN7	1–2	01	Operation signal
		1–3	02	Alarm signal
	CN8 (Not for RPK)	1–2	06	Thermostat enabled signal during heating

(*) If the Econofresh kit is connected, CN3 terminals 1 and 2 are locked for the enthalpy sensor or the CO_2 sensor.

6.1.4 Description of optional input signals

Control by field-supplied room thermostat

On-screen display: 01 or 02.

When a field-supplied room thermostat is used instead of the inlet thermistor on the indoor unit, connect the wiring and use the materials as indicated in *Available ports, see on page 203*.

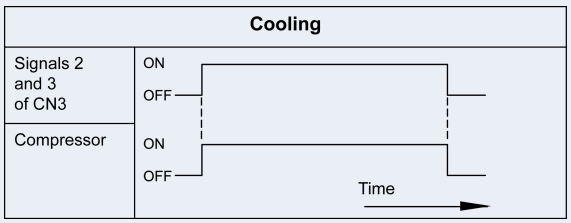

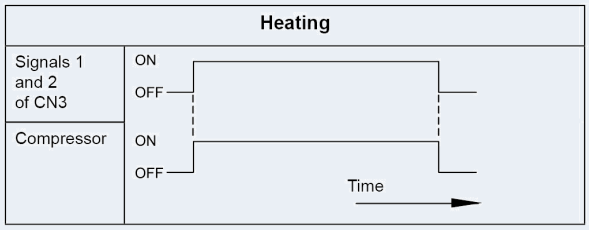

Specifications for field-supplied room thermostat:

- Manufacturer or type: equivalent to YAMAKATE R7031P005, R7031Q005.
- Contactor charge: 12 Vdc

- Difference of over 1.5 degrees.
- Do not use a mercury thermostat.
- The remote control must remain connected to the unit. When the power supply is reconnected, start the unit by pressing the on button. The compressor will then run under the control of the field-supplied thermostat. All other functions are controlled in the normal manner via the remote control.

Function 1: remote on/off of the unit

On-screen display: 03.

This is an optional on/off signal that uses the signal levels ON and OFF. Connect the wiring and use the materials as indicated in *Available ports, see on page 203*.

NOTE

When the unit is started using the remote ON/OFF switch, the fan speed depends on the mode stored in the remote control.

NOTE

- ***The collection of signals during the first 10 seconds after connecting the power supply is not available due to component initialisation.***
- ***Operation priority is given to the remote on/off signal or to the remote control, whichever is transmitted last.***

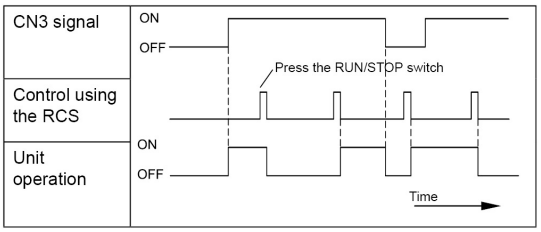

Function 2: remote switching on of the unit (pulse signal input)

On-screen display: 04.

This is an optional remote on/off signal that uses the pulse signal.

Connect the wiring and use the materials as indicated in *Available ports, see on page 203*.

Function 2: remote switching off of the unit (pulse signal input)

On-screen display: 05.

This is an optional remote off signal that uses the pulse signal.

Connect the wiring and use the materials as indicated in *Available ports, see on page 203*.

A time chart with the uses of functions 04/05 is shown below.

NOTE

The collection of signals during the first 10 seconds after connecting the power supply is not available due to component initialisation.

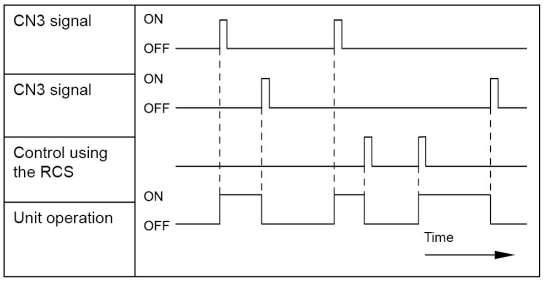

Cancellation of commands from the remote control after a forced stoppage

On-screen display: 06.

It is possible to stop the air conditioning systems using the signal from a building management system. In this case, the individual commands transmitted from the remote control are cancelled.

Connect the wiring and use the materials as indicated in *Available ports, see on page 203*.

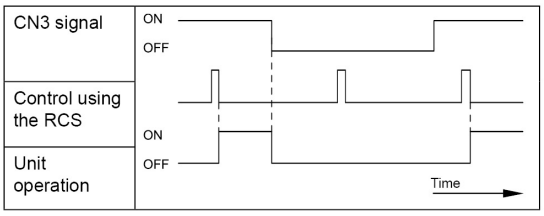

A time chart with the uses of the function is shown below.

NOTE

The collection of signals during the first 10 seconds after connecting the power supply is not available due to component initialisation.

With this optional function, contact B can be used through the optional setting of the remote control. The time chart is shown below, which provides information on when contact B can be used. See *Optional remote control functions, see on page 206* for further details on contacts A and B.

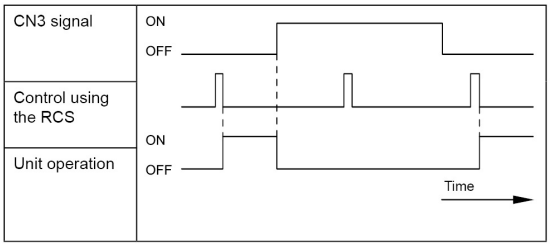

Cooling or heating mode setting

On-screen display: 07.

This optional signal can be used to change the heating or cooling operating mode by sending a contact signal from outside the unit. The operating mode is controlled by the field-supplied switch or by the remote control, whichever is used last.

Connect the wiring and use the materials as indicated in *Available ports, see on page 203*.

A time chart with the uses of the functions is shown below

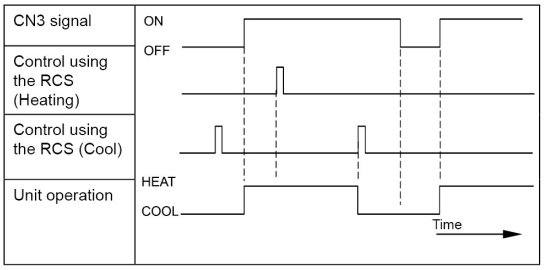

NOTE

The collection of signals during the first 10 seconds after connecting the power supply is not available due to component initialisation.

Control by use of a remote temperature sensor

On-screen display: 08.
The following functions are available when an optional remote temperature sensor is used:

- The unit is controlled by the average temperature of the air inlet thermistor and the remote temperature sensor.
- When the discharge air temperature exceeds 60 °C, the fan speed increases from medium to high or from low to medium.

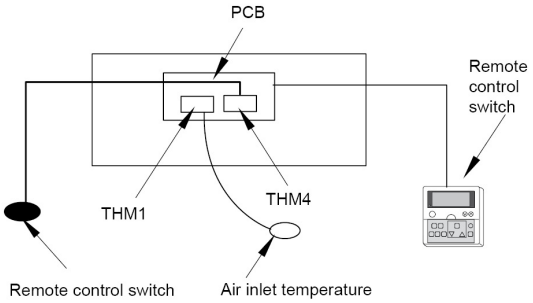

NOTE

- ***The remote control thermistor cannot be used if a remote temperature sensor is used.***
- ***The heating temperature calibration function is automatically cancelled in heating operation.***
- ***If a remote temperature sensor is used, it must be positioned according to the following requirements:***
  - ***It must be in a position where the average room temperature can be detected and where the outdoor air generated when doors are opened and closed does not affect the room temperature.***
  - ***It must be in a position where the thermistor is not directly exposed to sunlight or where there are no heat sources nearby.***

6.1.5 Description of optional output signals

Picking up of the operation signal

On-screen display: 01.

This optional signal is used to pick up the operation signal. Thanks to this function, the operation signal can be checked from a remote location and the outdoor air intake fan operation can be locked.

Connect the wiring and use the materials as indicated in *Available ports, see on page 203*.

NOTE

The auxiliary relay contact X2 closes when an operation signal is transmitted.

Alarm signal

On-screen display: 02.

This optional signal is used to pick up the activation of safety devices. The signal is normally displayed on the remote control. This function is not available under abnormal transmission conditions.

Connect the wiring and use the materials as indicated in *Available ports, see on page 203*.

NOTE

The auxiliary relay contact X2 closes when an operation signal is transmitted.

Cooling operation signal

On-screen display: 03.

This optional signal is used to pick up the cooling operation signal.

Connect the wiring and use the materials as indicated in *Available ports, see on page 203*.

NOTE

The X2 auxiliary relay contact closes when the cooling operation signal is enabled, regardless of whether the thermostat signal is enabled or disabled.

Thermostat enabled signal during the cooling process

On-screen display: 04.

This optional signal is used to pick up the thermostat enabled signal for the compressor operating during the cooling process.

Connect the wiring and use the materials as indicated in *Available ports, see on page 203*.

NOTE

The X1 auxiliary relay contact closes when the thermostat signal is enabled during cooling mode.

Heating operation signal

On-screen display: 05.

This optional signal is used to pick up the heating operation signal. The X2 auxiliary relay contact closes when the heating operation signal is enabled, regardless of whether the thermostat signal is enabled or disabled.

Connect the wiring and use the materials as indicated in *Available ports, see on page 203*.

NOTE

The X2 auxiliary relay contact closes when the cooling operation signal is enabled, regardless of whether the thermostat signal is enabled or disabled.

Thermostat enabled signal during the heating process

On-screen display: 06.

This optional signal is used to pick up the thermostat enabled signal for the compressor operating during the heating process and to control a circulation pump or humidifier.

Connect the wiring and use the materials as indicated in *Available ports, see on page 203*.

NOTE

The X2 auxiliary relay contact closes when the thermostat signal is enabled during heating mode.

6.2 Complementary systems

6.2.1 KPI

Optional functions

The following optional functions as shown in next table are available by setting of PC-ART. Contact your distributor or dealer of HITACHI for the detailed information.

Optional functions	RSC setting		DSW setting		Content	Indication content
Ventilation mode	E1	00	Not necessary		Automatic ventilation	This function is used to set the ventilation mode of the KPI unit
		01			Heat exchange ventilation	
		02			Bypass ventilation	
Air Volume Increasing	E2	00	Not necessary		Not activated	This function is used to make the room pressure higher than the surrounded room. One of the fans increases its speed while the other runs according the remote controller Hi/Me/Lo-->Hi/Hi/Me on the fan applied
		01	DSW4#4	OFF	Activated in supply fan	
				ON	Activated in exhaust fan	
Precooling/ Preheating period	E4	00	Not necessary		0 minutes	The starting of the unit is delayed a certain time while A/C system starts working
		01			30 minutes	
		02			60 minutes	
CO_2 sensor operation	Not necessary		DSW3#1	OFF	Not activated	When the CO_2 sensor (field supplied) is activated, the unit works automatically at high speed till CO_2 sensor gets deactivated *
				ON	Activated	
Fan stoppage delay (electrical heater)	Not necessary		DSW4#3	OFF	Not activated	This option delays the stoppage of the fans three minutes once the remote control is switched off. It cools down the electrical heater (field supplied) avoiding the damage
				ON	Activated	
High ventilation after switching ON	Not necessary		DSW4#2	OFF	Not activated	The unit runs in high speed during 30 minutes after switching on the unit. After that time the set fan speed is used
				ON	Activated	
Fixed high speed	Not necessary		DSW4#1	OFF	Not activated	The unit runs in high speed under any condition
				ON	Activated	

NOTE

**** CO_2 sensor signal must be an ON/OFF signal.***

CO_2 sensor must be connected to CN3, pins 1-2, for I1 input signal (refer to outdoor unit technical catalogue for further information about the connection specs).

When using this option. I1 std. functions become deactivated. I2 input signal is not affected.

Standard connection system and central station

	Standard connection		Central station PCS-5S
Example of systems	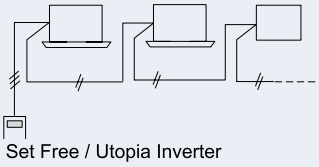	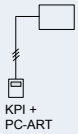	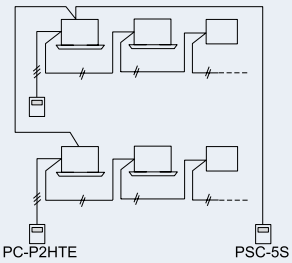
Outlook of systems	Able to control up to 16 Indoor Units and KPI Units	Able to control with PC-ART directory	Able to control up to 160 indoor units consist of 64 refrigeration series
System components	Remote control switch PC-ART	PC-ART remote control	Central station (PSC-A64S) PC-ART remote control

			Standard connection				Central station PCS-5S			
Switch remote control setting			PC-ART			PC-ART	Central station		PC-ART	
Switch remote control settings			A/C+VENTI	A/C	VENTI	VENTI	A/C +VENTI	A/C	A/C +VENTI	VENTI
Functions	RUN/ STOP	A/C	O(3*)	O	X	X	O(3*)	O	O(3*)	O
		KPI		X	O	O		X		X
	FAN SPEED	A/C	O(3*)	O	X	X	C (3*)	O	O(3*)	O
		KPI		X	O	O		X		X
	VENTI MODE	Auto	O(1*)	X	O(1*)	O(1*)	C (2*)	X	O(1*)	X
		Heat exchanger ventilation								
		Bypass ventilation								
	Pre-cooling Pre-heating		O(1*)	X	O(1*)	O(1*)	O(1*)	X	O(1*)	X
	Air volume up		O(1*)	X	O(1*)	O(1*)	O(1*)	X	O(1*)	X
	Filter signal		O	O	O	O	O	O	O(1*)	O

NOTE

O: available

X: not available

–: not used

- ***(1*): It is possible to set by function selection of PC-ART.***
- ***(2*): Set table by Remote Control Switch.***
- ***(3*): Indoor unit and KPI operate simultaneously.***
- ***If H-LINK is used, assign a refrigeration number to each total heat exchanger.***
- ***In the case of CSNET WEB, it is not possible to use AUTO COOL/HEAT.***
- ***If the ON/OFF function of the remote control (optional function) is used, the total heat exchanger cannot be used.***

Controlled network system

	Computer-controlled Hitachi network system CS–NET		
Example of systems	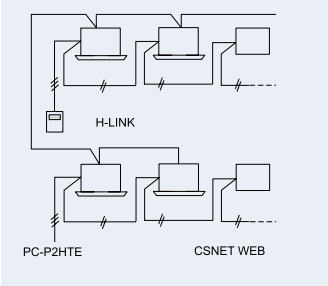	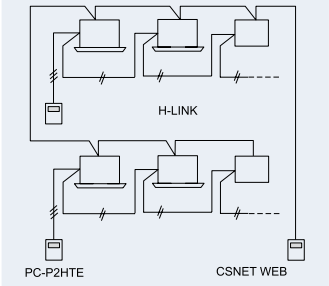	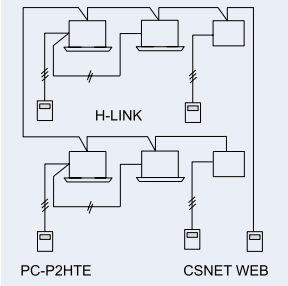
Description of the systems	Capable of controlling up to 128 indoor units formed by 16 refrigeration series		

			Computer-controlled Hitachi network system CS–NET													
System components			CSNET WEB Remote control PC-ART													
Location of the remote control			CSNET-WEB			PC-ART			CSNET-WEB			PC-ART			CSNET-WEB	PC-ART
Remote control setting			A/C +VENTI	A/C	VENTI	A/C +VENTI	A/C	VENTI	A/C +VENTI	A/C	VENTI	A/C +VENTI	VENTI	VENTI	VENTI	VENTI
Functions	RUN/ STOP	A/C	O(3*)	O	X	O(3*)	O	X	O(3*)	O	X	O(3*)	O	X	X	X
		KPI		X	X		X	O		X	O		X	O	O	O
	FAN SPEED	A/C	O(3*)	O	X	O(3*)	O	X	O(3*)	O	X	O(3*)	O	X	X	X
		KPI		X	X		X	O		X	O		X	O	O	O
	VENTI MODE	Automatic KPI Bypass ventilation	X (2*)	X	X (2*)	O	X	O	X (2*)	X	X (2*)	O	X	O	X (2*)	O
	Pre-cooling Pre-heating		X (2*)	X	X (2*)	O	X	O	X (2*)	X	X (2*)	O	X	O	X (2*)	O
	Air volume increase		X (2*)	X	X (2*)	O	X	O	X (2*)	X	X (2*)	O	X	O	X (2*)	O
	Filter signal		X	X	X	O	O	O	X	X	X	O	O	O	X	O

NOTE

O: available

X: not available

–: not used

- ***(1*): It is possible to set by function selection of PC-ART.***
- ***(2*): Set table by Remote Control Switch.***
- ***(3*): Indoor unit and KPI operate simultaneously.***
- ***If H-LINK is used, assign a refrigeration number to each total heat exchanger.***
- ***In the case of CSNET WEB, it is not possible to use AUTO COOL/HEAT.***
- ***If the ON/OFF function of the remote control (optional function) is used, the total heat exchanger cannot be used.***

6.2.2 Econofresh Kit

◆ Available ports

The system has three optional input signals programmed into the PCB using connector CN3 on the RPI unit and using the remote control. Connector CN3 has two ports for configuring the optional input signals of the Econofresh kit.

The outdoor cooling function E1 requires no CN3 connector setting.

NOTE

When the RPI unit DSW6 is set for use of the Econofresh kit, CN3 connectors 1 and 2 are locked on the RPI unit PCB.

Description of optional input signals

Enthalpy sensor

On-screen display: E2.

The signal opens and closes the air inlet valves and the outlet damper, mixing the outdoor air and the return air of the Econofresh kit. This function is based on the air quality parameters that provide precise control of the air quality.

Connect the cables as indicated in point *Available ports, see on page 203*. Only CN3 contacts 1 and 2 can be connected.

The signal has the following control logic:

Connector	Contact number	X1	Damper valve
CN3	1, 2	ON	—
		OFF	Enabled

CO_2 sensor

On-screen display: E4.

This signal controls the inlet of outdoor air according to the concentration of CO_2 inside the room.

Connect the cables as indicated in point *Available ports, see on page 203*. Only CN3 contacts 1 and 2 can be connected.

The signal has the following control logic:

Connector	Contact number	X1	Damper valve
CN3	1, 2	ON	—
		OFF	Enabled

◆ Compatibilities between optional signals

The following table shows the compatibility between the different optional signals:

	PC-ART optional functions	Room thermostat	Remote control thermistor	Remote thermistor	Wireless remote control	Outdoor cooling mode	Enthalpy sensor	CO_2 sensor
Room thermostat	–	–	–	–	–	–	–	–
Remote control thermistor	C8	–	–	–	–	O	O	O
Remote thermistor	–	–	–	–	–	–	–	–
Wireless remote control	–	–	–	–	–	O	O	O
Outdoor cooling mode	E1	–	O	–	O	–	–	–
Enthalpy sensor	E2	–	O	–	O	–	–	–
CO_2 sensor	E4	–	O	–	O	–	–	–

- Not available: –
- Available: O

6.2.3 DX-Interface

DX-Interface has the same optional functions described for the RPI Indoor Units.

Please, refer to *Description of optional input signals, see on page 196* and *Description of optional output signals, see on page 199* for detailed information about the optional functions information.

6.3 Remote controls

6.3.1 Optional remote control functions

Programming and setting mode

Check that the unit is stopped, if not switch it off. Press the OK and RESET buttons on the remote control at the same time for more than 3 seconds. The screen will display SERVICE and the following indication will flicker: 01.	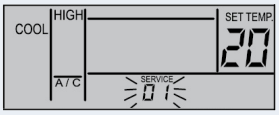

Selection of SERVICE 01

Press TEMP▲ or TEMP▼ to change the value of the number flickering below the SERVICE display. Select 01 and press the OK button, or maintain the indication for 7 seconds for the remote control to change to the optional setting mode.

Indoor unit selection

a.	In SERVICE 01 mode, the indication changes as shown in the figure. **1** Indication 01 enabled. **2** Indication of the indoor unit on which the optional function is to be set (displayed in the time indication segments for the timer setting and the ADDS indication is displayed below). **3** Indication of the refrigerant cycle number of the outdoor unit on which the optional function is to be set (displayed in the time indication segments for the timer setting and the RN indication is displayed below). **4** The temperature setting display disappears.
b.	In the previous step (a), press TEMP ▲ or TEMP ▼ on the remote control to select the indoor unit on which the optional function is to be set. **NOTE** • ***The indoor unit can be selected from the indoor units connected to the remote control.*** • ***If the direction and refrigerant cycle number indication is AA, the settings of all the indoor units are the same.***
c.	After selecting the indoor unit, press the OK button, or maintain the indication for 7 seconds for the remote control to change to the optional setting mode.

Changing the optional signals and setting conditions

a.	In optional setting mode, the remote control indication changes as shown below: **1** The ADDS and RN indications are off. **2** The optional function setting condition is displayed in the time indication segments for the timer setting. **3** The optional function number is indicated in the temperature setting segments.	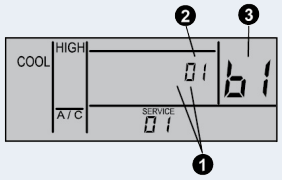
b.	Press the DAY▲ or SCHEDULE▼ button on the remote control to select the port to which the input and output signals are to be assigned.	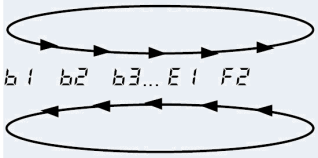
c.	Press the OK button. The port indication in the temperature indication segments change as shown in the figure below.	

Returning to normal mode from optional function setting mode

Press RESET to store the optional function settings and return to normal mode.

Selection of another indoor unit

In optional function setting mode, press TEMP ▲ or TEMP ▼ on the remote control to select the indoor unit on which the optional function is to be set.

6.3.2 List of optional remote control functions

Part	Optional function	Individual setting	Settings	Condition setting	Description
b1	Elimination of the heating temperature offset	O	00	Standard setting. Selected temperature +4 °C increase	This function is used when the temperature setting displayed on the remote control and the inlet air temperature of the indoor unit are to be the same.
			01	Offset elimination	
			02	Selected temperature +2 °C increase[1]	
b2	Forced air circulation function on reaching the set temperature	O	00	Not available	This function prevents air stratification in the room after stopping the air conditioning system.
			01	Available	
b3	Forced compressor operation for at least three minutes	O	00	Not available	This function is used to protect the compressor, preventing it from being started or stopped for periods of less than three minutes.
			01	Available	
b4	Pre-determined filter cleaning period change	O	00	Standard	This function is used to modify the period during which the remote control indicates that the air filter must be replaced.
			01	100 hours	
			02	1200 hours	
			03	2500 hours	
			04	Not indicated	
b5	Operation mode interlock	X	00	Not available	Once the unit operating mode has been selected, this function prevents it from being modified from the remote control.
			01	Available	
b6	Set temperature interlock	X	00	Not available	Once the temperature on the unit has been selected, this function prevents it from being modified from the remote control.
			01	Available	
b7	Cooling operation interlock	X	00	Not available	This function is available to use refrigeration mode only and to prevent heating mode from being enabled.
			01	Available	
b8	Automatic cooling/ heating operation	X	00	Not available	This function allows for cooling mode to be changed automatically to heating mode (for all units of the same refrigerant cycle).
			01	Available	
b9	Fan speed interlock	X	00	Not available	Once the fan speed on the unit has been selected, this function prevents it from being modified from the remote control.
			01	Available	
bA	Not used	X	- - permanent	Not used	–
bb	Cooling temperature offset	O	00	Standard setting. No offset	This function is used to obtain longer cooling periods.
			01	Selected temperature -1 °C	
			02	Selected temperature -2 °C	
bC	Not used	–	00	Not used	–
			01	Used as setting for conditions 00	–

Part	Optional function	Individual setting	Settings	Condition setting	Description
bd	Not used	–	00	Not used	–
			01	Used as setting for conditions 00	–
bE	Not used	–	00	Not used	–
			01	Used as setting for conditions 00	–
C1	Not used	–	00	Not used	–
			01	Used as setting for conditions 00	–
C2	Not used	–	- - permanent	Not used	–
C3	Not used	O	00	Not used	–
			01	Used as setting for conditions 00	–
C4	Not used	O	00	Not used	–
			01	Used as setting for conditions 00	–
C5	Static pressure selection	O	00	Average static pressure (factory set)	This function is used to increase the fan speed on the indoor ducted units.
			01	High static pressure	
			02	Low static pressure	
C6	Fan speed increase	O	00	Not available	This function is used to increase the fan speed when the thermostat reaches the set temperature in heating with function C5.
			01	Available	
C7	Cancellation of the forced compressor operation for at least three minutes	O	00	Not available	Cancels function b3.
			01	Available	
C8	Remote control thermistor	O	00	Air temperature control using the unit air inlet thermistor	This function determines the thermistor to control the air temperature.
			01	Air temperature control using the remote control thermistor	
			02	Air temperature control using the average value of the air inlet thermistor and the remote control thermistor	
C9	Not used	–	- - permanent	Not used	–
CA	Not used	–	- - permanent	Not used	–
Cb	Forced stoppage logic selection	X	00	Forced stoppage inlet: contact A	This function determines the operating logic for the forced stoppage contacts.
			01	Forced stoppage inlet: contact B	

Part	Optional function	Individual setting	Settings	Condition setting	Description
CC	Not used	X	00	Not used	–
			01	Used as setting for conditions 00	–
Cd	Not used	O	00	Not used	–
			01	Used as setting for conditions 00	–
CE	Not used	O	00	Not used	–
			01	Used as setting for conditions 00	–
CF	Change in the air outlet louver angle	O	00	Standard (7 positions)	This function adjusts the angle of the air outlet louver.
			01	Draught prevention (5 positions)	
			02	High ceilings (5 positions)[3]	
d1	Power on/off 1	O	00	Not available	This function stores the settings of the unit in the event of a cut in the electric power supply. The unit is restarted when the power is re-established.
			01	Available	
d2	Not used	X	- - permanent	Not used	–
d3	Power on/off 2	O	00	Not available	This function is used to restart the unit after a cut in the power supply lasting for more than 2 seconds.
			01	Available	
d4	Cooling air temperature drop prevention.	O	00	Not available	This function changes the cooling operating conditions to avoid cold draughts.
			01	Available	
d5	Heating air temperature drop prevention.	O	00	Not available	This function prevents a drop in the air temperature by decreasing the fan speed, apart from the settings on the remote control.
			01	Available	
d6	Room temperature control for energy saving	O	00	Not available	This function saves energy when the outdoor temperature is lower than the air conditioning charge.
			01	Available	
d7	Not used	O	00-07	Not used. Used as setting for conditions 00	–
E1	Econofresh: Outdoor cooling mode	O	KPI:		This function is used to set the ventilation mode of the ventilation unit with energy / heat recovery
			00	Automatic ventilation	
			01	Ventilation with total heat exchanger	
			02	Ventilation with bypass (no total heat exchange)	
	KPI: ventilation mode		Econofresh kit		
			00	Not available	
			01/02	Outdoor cooling mode (All-Fresh)	
E2	Increased air supply volume	O	00	Not available	This function is used to increase the air supply volume in the room.
			01	Available	

Part	Optional function	Individual setting	Settings	Condition setting	Description
E3	Not used	O	00	Not used	–
			01	Used as setting for conditions 00	
E4	Pre-cooling / pre-heating period	O	KPI:		This function delays start-up of the ventilation unit with energy / heat recovery
			00	Standard	
			01	30 minutes	
			02	60 minutes	
			Econofresh kit		
			00	Standard	
			02	CO_2 sensor	
E5	Not used	O	00	Not used	–
			01	Used as setting for conditions 00	
E6	Fan operating time after stoppage of the indoor unit in cooling mode	O	00	Not available	This prevents condensation from accumulating in the unit by keeping the fan running after it is switched off.
			01	60 minutes	
			02	120 minutes	
E7	Not used	O	00	Not used	–
			01	Used as setting for conditions 00	
E8	Fan operating control after stoppage of the indoor unit in heating mode	O	00	Not available	This function reduces the unit fan speed to prevent cold draughts.
			01	Available	
E9	Not used	O	00	Not used	–
			01	Used as setting for conditions 00	
EA	Not used	O	00	Not used	–
			01	Used as setting for conditions 00	
Eb	Fan operating control after stoppage of the indoor unit in cooling mode	O	00	Not available	This function reduces the unit fan speed to reduce the spreading of smells and humidity.
			01	Low	
			02	Slow	
EC	Forced stoppage in cooling mode	O	00	Not available	This function is used to force stoppage when cooling is complete.
			01	Available	
Ed	Not used	O	00	Not used	–
			01	Used as setting for conditions 00	
EE	Automatic fan speed control	O	00	Not available	This function limits the operating of the unit by automatically controlling the fan speed when the room temperature is close to the set temperature.
			01	Available	

Part	Optional function	Individual setting	Settings	Condition setting	Description
F1	Automatic timer off setting	X	00	Function not valid	This function is used to switch off the timer automatically when the unit has been started by remote control.
			01	1 h	
			02	2 h	
			03	3 h	
			04-24	(04-24) h	
			0A	0.5 h	
			0B	1.5 h	
F2	Main and secondary remote control setting	X	00	Master	This function is used when two remote controls are installed in a system.
			01	Slave	
F3	Automatic temperature setting release	X	00	Not available	This function releases the fixed temperature setting after a certain time to limit unit operations and save energy.
			01	Available	
F4	Automatic release time	X	00	30 minutes (factory setting)	This function is used to set the automatic release time with the temperature setting
			01	15 minutes	
			02	60 minutes	
			03	90 minutes	
F5	Automatic cooling temperature release	X	19	19 °C	This function is used to set automatic temperature release for the FAN/ COOL/DRY functions.
			20	20 °C	
			21-24	(21-24) °C	
			25	25 °C (factory setting)	
			26-28	(26-28) °C	
			29	29 °C	
			30	30 °C	
F6	Automatic heating temperature release	X	19	19 °C	This function is used to set automatic temperature release for the HEAT function.
			20	20 °C	
			21-24	(21-24) °C	
			25	25 °C (factory setting)	
			26-28	(26-28) °C	
			29	29 °C	
			30	30 °C	
F7	Prevention of operation stoppage due to remote control operating error	X	–	–	–
F8	Operation mode selection interlock	X	00	Not available	This function is used to prevent changes to the operating mode.
			01	Available (factory setting)	
F9	Temperature setting interlock	X	00	Not available	This function is used to prevent changes to the temperature setting.
			01	Available (factory setting)	

Part	Optional function	Individual setting	Settings	Condition setting	Description
FA	Fan speed selection interlock	X	00	Not available	This function is used to prevent changes to the fan speed.
			01	Available (factory setting)	
Fb	Automatic louver interlock	X	00	Not available	This function is used to prevent changes to automatic louver operations.
			01	Available (factory setting)	
FC	Lower cooling temperature setting limit	X	00	Standard	This function is used to define a lower temperature setting limit for FAN/ COOL/DRY functions.
			01	Lower limit +1 °C	
			02	Lower limit +2 °C	
			03-08	Lower limit +(03-08) °C	
			09	Lower limit +9 °C	
			10	Lower limit +10 °C	
Fd	Upper heating temperature setting limit	X	00	Standard	This function is used to define an upper temperature setting limit for the HEAT function.
			01	Lower limit -1 °C	
			02	Lower limit -2 °C	
			03-08	Lower limit -(03-08) °C	
			09	Lower limit -9 °C	
			10	Lower limit -10 °C	
FE	Not used	–	00	Not available	–
			01	Used as setting for conditions 00	
			02		
FF	ON/OFF timer function interlock	X	00	Not available	This function is used to lock timer activation.
			01	Available (factory setting)	
H1	Maintenance alarms	O	00	Display	This function is used to display or hide maintenance alarms.
			01	Hide	
H2	Automatic control indication	O	00	Display	This function is used to display or hide the automatic control indication.
			01	Hide	
H3	Operating mode change restriction	O	00	Operating mode change disabled (factory setting)	This function is used to configure restrictions to the operating mode.
			01	Operating mode set by the central control + FAN mode	
			02	Unlimited operating mode	
H4	Operating modes for the ventilation unit with energy / heat recovery	O	00	Air conditioning only	This function is only available for the ventilation unit with energy / heat recovery.
			01	Ventilation only	
			02	Air conditioning + ventilation	
H5	Central control available after forced stoppage	O	00	Not available	This function allows for central control after the forced stoppage of the unit.
			01	Available	

O: allows for individual setting.

X: the setting is made for all outdoor units.

–: not used.

[1] Setting 02 is not available on all indoor units.

[2] On RPI units: 00 Increases speed 1 (standard), 01 Increases speed 2 (high static pressure), 02 Standard speed (low static pressure).

[3] 00 standard (7-position setting); 01 draught prevention (cannot be set below two positions); 02 High ceilings (cannot be set above two positions).

6.3.3 Description of the optional remote control functions

b1 – Elimination of the heating temperature offset

This function is useful when the thermistor is removed from the suction area of the indoor unit and installed somewhere else. It is used when the temperature setting displayed on the remote control and the inlet air temperature of the indoor unit are to be the same.

Settings	Actual temperature control
00	Standard setting. Selected temperature +4 °C increase
01	Offset elimination
02	Selected temperature +4 °C increase

b2 – Forced air circulation function on reaching the set temperature

This function is useful when the air in the room is stratified (hot air accumulates at the ceiling). Air stratification may occur if LOW has been selected with the heating thermostat off. This function prevents air stratification in the room after stopping the air conditioning system.

The circulation pump function maintains the fan speed, whether the thermostat is on or off. Hence, the air movement in the room is kept at the same level to ensure even air distribution.

NOTE

If the indoor unit has an automatic louver, this function also remains active when the heating thermostat is switched off.

Everyone has a different perception of coolness, heat and air flow and, therefore, this issue should be discussed with the client and the unit set according to the results of the conversation.

Settings	Condition setting
00	Not available
01	Available

b3 – Forced compressor operation for at least three minutes

This function is used to protect the compressor, preventing it from being started or stopped for periods of less than three minutes. On enabling this function, the mode enabling operations for a minimum of 3 minutes is added.

NOTE

In the case of SET-FREE units, this function is standard, even when the setting is not available.

The compressor stops immediately when the safety device is activated or ON/OFF is pressed.

To cancel this function, see C7 – Cancellation of the forced compressor operation for at least three minutes.

When this function is cancelled, the mode enabling operations for a minimum of 3 minutes remains available.

Settings	Condition setting
00	Not available
01	Available

b4 – Pre-determined filter cleaning period change

This function is used to modify the period during which the remote control indicates that the air filter must be replaced. The filter cleaning period can be changed depending on the condition of the filter, as shown in the table below:

NOTE

The remaining number of hours before cleaning the filter is factory-set for all indoor unit models.

	Filter indication period			
	Approx. 100 hours	Approx. 1200 hours	Approx. 2500 hours	No indication
Built-in 4-way type	Period modified	Period modified	Factory setting	Period modified
LCD screen on the remote control.	01 b4	02 b4 or 00 b4(*)	03 ba	04 b4

(*)for RPK units, the factory setting is 200 hours.

b5 – Operation mode interlock

This function is used when the operating mode does not have to be changed. Once the unit operating mode has been selected, this function prevents it from being modified from the remote control.

Settings	Condition setting
00	Not available
01	Available

b6 – Temperature setting lock

This function is used when the temperature setting does not have to be changed. Once the temperature on the unit has been selected, this function prevents it from being modified from the remote control.

Settings	Condition setting
00	Not available
01	Available

b7 – Cooling operation interlock

This function is available to use refrigeration mode only and to prevent heating mode from being enabled. When this function is selected, heating operation and the automatic COOL/HEAT operation are cancelled.

Settings	Condition setting
00	Not available
01	Available

b8 – Automatic cooling/ heating operation

This function allows for cooling mode to be changed automatically to heating mode (for all units of the same refrigerant cycle).

NOTE

This function is not valid when the outdoor unit is an exclusive cooling model or when the function to set operations as an exclusive cooling unit is enabled.

Settings	Condition setting
00	Not available
01	Available

b9 – Fan speed interlock

Once the fan speed on the unit has been selected, this function prevents it from being modified from the remote control.

NOTE

When this function is enabled, the fan speed cannot be changed using the remote control.

Settings	Condition setting
00	Not available
01	Available

bAk – Not used

bb – Cooling temperature offset

This function is used to obtain longer cooling periods. When this function is enabled, the air conditioning system is switched on/off with the temperature condition below the temperature indicated on the remote control.

NOTE

The lower set temperature limit after offset is 19 °C.

Setting condition	Control temperature
00 (Standard)	Standard setting. No offset
01	Remote control set temperature (indicated value) -1 °C
02	Remote control set temperature (indicated value) -2 °C

bC – Not used

bd – Not used

bE – Not used

C1 – Not used

C2 – Not used

C3 – Not used

C4 – Not used

C5 – Static pressure selection

The fan speed increase selection function is only available for RCI and RCD units. It is used to increase the fan speed on the indoor ducted units.

NOTE

In the case of RPI units, this setting is used to select the static pressure.

Settings	Condition setting
00	Average static pressure (factory set)
01	High static pressure
02	Low static pressure

C6 – Fan speed increase

The fan speed increase selection function is only available for RCD units. This function is used to increase the fan speed when the thermostat reaches the set temperature in heating with function

NOTE

The fan speed does not increase when the thermostat is switched off with the function setting (C5)

Settings	Condition setting
00	Not available
01	Available

C7 – Cancellation of the forced compressor operation for at least three minutes

This function is used when b3 – forced compressor operation for at least 3 minutes is to be cancelled.

NOTE

In the case of SET-FREE units, the forced compressor operation for at least 3 minutes described (b3) is the standard function.

Settings	Condition setting
00	Not available
01	Available

C8 – Remote control thermistor

This function is useful when the unit is to be controlled by the thermistor included in the remote control instead of by the suction air thermistor. It determines the thermistor to control the air temperature.

NOTE

When the function is set to "01" or "02", if the temperature detected by the remote control thermistor is abnormal due to a fault in the remote control thermistor or another fault, the intake air thermistor on the indoor unit is used automatically.

Settings	Condition setting
00	Air temperature control using the unit air inlet thermistor
01	Air temperature control using the remote control thermistor
02	Air temperature control using the average value of the air inlet thermistor and the remote control thermistor

C9 – Not used

CA – Not used

Cb – Forced stoppage logic selection

This function determines the operating logic for the forced stoppage contacts.

The setting conditions and contact logic are shown in the following table:

Setting condition				
Setting	Contact	Contact logic	Activation contact	
			Open	Closed
00	Contact A	Normally open	Normal	Forced stoppage
01	Contact B	Normally closed	Forced stoppage	Normal

CC – Not used

Cd – Not used

CE – Not used

CF – Change in the air outlet louver angle

This function is useful when the louver swing angle (air discharge angle) is to be changed.

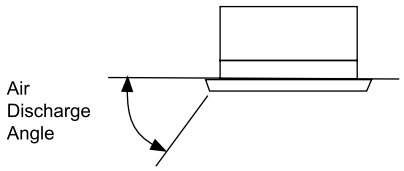

Setting condition	Louver swing angle	Use
00	Approx. 30 to 60°	Standard (7 positions)
01	Approx. 30 to 50°	Draught prevention (5 positions)
02	Approx. 40 to 60°	High ceilings (5 positions)[3]

d1 – Power on/off 1

This function stores the settings of the unit in the event of a cut in the electric power supply. The unit is restarted when the power is re-established.

CAUTION

When this function is used without anyone controlling the unit, set the system monitoring mode to avoid risks.

NOTE

In the event of an electrical fault, the unit starts and stops according to the on/off setting of the power supply. If the fault occurs during a stoppage enabled through the remote control, the unit will restart automatically once the power supply is reconnected.

Settings	Condition setting
00	Not available
01	Available

d2 – Not used

d3 – Power on/off 2

This function is used to restart the unit after a cut in the power supply lasting for more than 2 seconds. The standard unit starts automatically under the same operating conditions, such as the operating mode, etc. in the case of an electrical fault lasting for a maximum of 2 seconds.

The compressor unit restarts after three minutes plus the maximum 2 seconds of the fault.

CAUTION

When this function is used without anyone controlling the unit, set the system monitoring mode to avoid risks.

Settings	Condition setting
00	Not available
01	Available

d4 – Cooling air temperature drop prevention

This function is useful when the thermostat on/off conditions are to be changed and a decrease in discharge air temperature is to be avoided. As a result, the perception of draughts is prevented.

- Thermostat off conditions (thermostat switched off when the discharge air temperature is low):
  - Cooling operation (including dry operation).
  - Indoor air discharge temperature <11 °C maintained for 3 minutes.
- Thermostat on conditions (thermostat switched off when the discharge air temperature is low):
  - Indoor discharge air temperature >13 °C.
  - The thermostat will switch on depending on the indoor discharge air temperature.

Settings	Condition setting
00	Not available
01	Available

d5 – Heating air temperature drop prevention.

This function prevents a drop in the air temperature by decreasing the fan speed, apart from the settings on the remote control.

Settings	Condition setting
00	Not available
01	Available

Indications on the remote control	Actual fan speed
High	Medium
Medium	Low
Low	Low

d6 – Room temperature control for energy saving

This function is useful when energy is to be saved automatically. The outdoor air temperature thermistor detects that the air conditioning charge is low, in line with the outdoor temperature.

Settings	Condition setting
00	Not available
01	Available

d7 – Not used

Settings	Condition setting
00-07	Not used. Used as setting for conditions 00

E1 – Econofresh outdoor cooling mode / KPI ventilation mode

This function is used to set the ventilation mode of the ventilation unit with energy / heat recovery

KPI: This function is useful to set the heat exchanger ventilation mode. The setting condition and ventilation mode are shown below:

Setting condition		
Setting	Ventilation mode	Contents
00	Automatic ventilation	Effective ventilation mode selection (ventilation with total heat exchanger or ventilation bypass) to save energy by detecting the difference in temperature between indoors and outdoors.
01	Ventilation with heat exchanger	Heat is exchanged continuously when the heat exchanger is started.
02	Ventilation bypass (without heat exchanger)	Heat is not continuously exchanged when the heat exchanger is started.

Econofresh kit: this function allows for the outdoor air damper to be opened. The setting condition is shown below:

Setting	Setting condition
00	Not available
01/02	Outdoor cooling mode (All-Fresh)

E2 – Increased air supply volume

This function is useful when the air supply volume is to be increased using the high-speed, one-way valve on the fan motor during total heat exchanger operations. This increases the pressure in the room with greatest air volume in relation to adjoining rooms and prevents the entry of contaminated air or unpleasant smells.

The following table shows the air flow rate setting using the remote control and the actual air flow rate of the total heat exchanger when this function is enabled.

Settings	Condition setting
00	Not available
01	Available

Air flow rate setting with the remote control	Air flow rate on the total heat exchanger
Low	Medium
Medium	Height
Height	Height

E3 – Not used

Settings	Condition setting
00	Not available
01	Used as setting for conditions 00

E4 – Pre-cooling / pre-heating period

KPI: This function is useful to delay start-up of the total heat exchanger. The setting condition and delay time are shown below:

Setting	Start-up delay time
00	0 minutes (standard)
01	30 minutes
02	60 minutes

Econofresh kit: This function is useful to set the gas sensor input. The setting condition and delay time are shown below:

Setting	Gas sensor	Contents
00	Standard	The gas sensor input is not available.
02	CO_2 sensor	The gas sensor input is available.

E5 – Not used

Settings	Condition setting
00	Not available
01	Used as setting for conditions 00

E6 – Fan operating time after stoppage of the indoor unit in cooling mode

This prevents condensation from accumulating in the unit by keeping the fan running after it is switched off.

Settings	Condition setting
00	Not available
01	60 minutes
02	120 minutes

E7 – Not used

E8 – Fan operating control after stoppage of the indoor unit in heating mode

This function is useful to avoid the perception of cold draughts by reducing the indoor fan speed with the heating thermostat off.

Setting condition	Fan operation with the thermostat switched off
00	Not available
01	Available

E9 – Not used

Settings	Condition setting
00	Not used
01	Used as setting for conditions 00

EA – Not used

Settings	Condition setting
00	Not used
01	Used as setting for conditions 00

Eb – Fan operating control after stoppage of the indoor unit in cooling mode

This function reduces the unit fan speed to reduce the spreading of smells and humidity.

Setting condition	Fan operation with the thermostat switched off
00	Not available
01	Low
02	Slow

EC – Fan operating control after stoppage of the indoor unit in cooling mode

This function is used to force stoppage when cooling is complete. It is effective for avoiding unpleasant smells, as the heat exchanger remains clean, e.g. it is rinsed with drainage water.

Setting condition	Fan operation with the thermostat switched off
00	Fan at set speed
01	Low
02	Slow

Ed – Not used

EE – Automatic fan speed control

This function is useful to economise the operating time and limit the operating of the unit by automatically controlling the fan speed when the room temperature is close to the set temperature. The following table shows the change of fan speed:

NOTE

This function is available for PC-ART and all indoor units except RPI(8.0/10.0)FSN3E

The configuration fan speed	Speed setting
High	High→ Medium→ Low
Medium	Medium→ Low
Low	Low (no change)

Settings	Condition setting
00	Not available
01	Available

F1 – Automatic timer off setting

This function is used to switch off the timer automatically when the unit is started using the remote control.
It is not possible to cancel or change the timer off setting during automatic timer off setting. However, it can be cancelled when the unit is stopped. When the unit is restarted, the off timer setting period is established according to the optional setting. The setting condition and off timer setting period are indicated below

NOTE

This function is not available for control using CS-NET or 7-day timer.

Setting condition		Contents
00	Function not valid	Off timer not set
01	1 h	Switches off after operating for 1hour
02	2 h	Switches off after operating for 2 hours
03	3 h	Switches off after operating for 3 hours
04-24	04-24 h	Switches off after operating for 04-24 hours
0A	0.5 h	Switches off after operating for 0.5 hours
0A	1.5 h	Switches off after operating for 1.5 hours

F2 – Main and secondary remote control setting

This function is useful when configuring two remote controls for the same installation: one in main mode and the other in secondary mode.

Setting		Contents
00	Master	The remote control is configured as main
01	Slave	The remote control is configured as secondary

F3 – Automatic temperature setting reset.

However, the temperature configuration does not perform the automatic Reset when operating in Automatic COOL/HEAT mode or operations using the remote control for the central unit are forbidden.

This function is used to economise the operation. When this function is valid, the temperature configuration is automatically initialised for Cooling/Heating (55/56) under the following conditions:

- If the automatic temperature Reset (54) is not performed during temperature configuration.
- If it is effective for optimum temperature configuration and energy is saved.

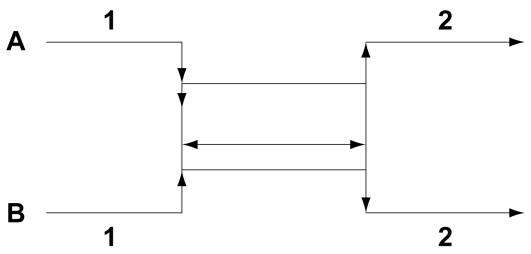

Example: Automatic temperature Reset for 25 °C in air conditioning:

Figure	Description
A	Temperature setting changed from 25 °C to 20 °C using the remote control.
B	The cold operation at 20°C is temporarily enabled
C	If the operation is not defined within a specific period, the temperature configuration returns to 25 °C automatically.

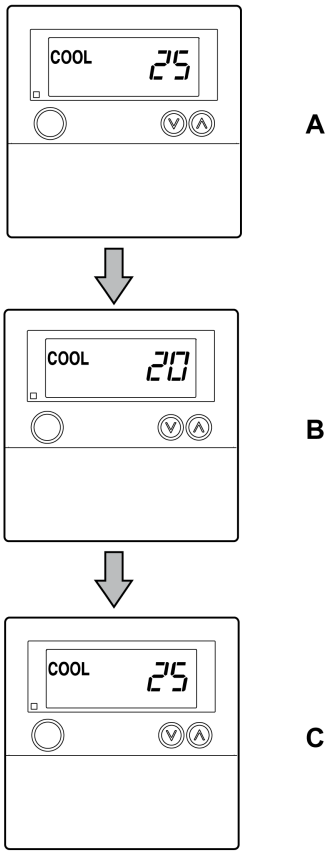

F4 – Automatic release time

This function is used to set the automatic release time with the temperature setting.

Setting	Condition setting
00	30 minutes (factory setting)
01	15 minutes
02	60 minutes
03	90 minutes

F5 – Automatic cooling temperature release

This function is used to set automatic temperature release for the FAN/COOL/DRY functions.

Setting	Condition setting
19	19 °C
20	20 °C
21-24	(21-24) °C
25	25 °C (factory setting)
26-28	(26-28) °C
29	29 °C
30	30 °C

F6 – Automatic heating temperature release

This function is used to set automatic temperature release for the HEAT function.

Setting	Condition setting
19	19 °C
20	20 °C
21-24	(21-24) °C
25	25 °C (factory setting)
26-28	(26-28) °C
29	29 °C
30	30 °C

F7 – Prevention of operation stoppage due to remote control operating error

F8 – Operation mode selection interlock

This function is used to prevent changes to the operating mode. The setting condition is shown below.

Setting	Condition setting
00	Not available
01	Available (factory setting)

F9 – Temperature setting interlock

This function is used to prevent changes to the temperature setting. The setting condition is shown below.

Setting	Contents
00	Not available
01	Available (factory setting)

FA – Fan speed selection interlock

This function is used to prevent changes to the fan speed. The setting condition is shown below.

Setting	Contents
00	Not available
01	Available

Fb – Automatic louver interlock

This function is used to prevent changes to automatic louver operations. The setting condition is shown below:

Setting condition	Contents
00	Not available
01	Available

FC – Lower cooling temperature setting limit

This function is useful to set the temperature range in cooling mode. It enables the cooling range to be reduced for configuration using the remote control. The setting condition is shown below:

Setting	Contents
00	Standard
01	Lower limit +1 °C
02	Lower limit +2 °C
03-08	Lower limit +(03-08) °C
09	Lower limit +9 °C
10	Lower limit +10 °C

An example is shown in the following figure:

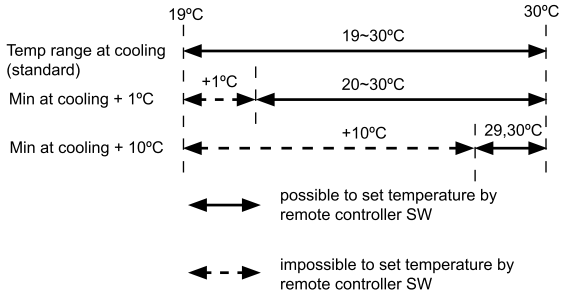

Fd – Upper heating temperature setting limit

This function is used to define an upper temperature setting limit for the HEAT function. This function enables the heating range to be reduced for configuration using the remote control. The setting condition is shown below.

Setting	Contents
00	Standard
01	Lower limit -1 °C
02	Lower limit -2 °C
03-08	Lower limit -(03-08) °C
09	Lower limit -9 °C
10	Lower limit -10 °C

An example is shown in the following figure:

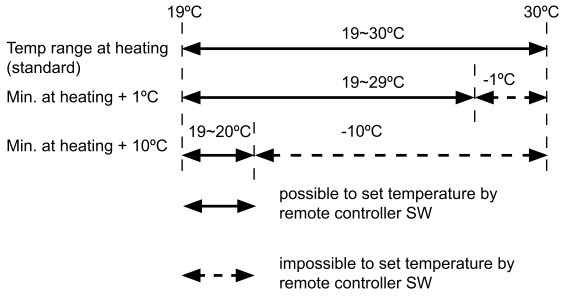

FE – Not used

Setting	Contents
00	Not available
01	Used as setting for conditions 00
02	

FF – ON/OFF timer function interlock

This function is used to lock timer activation.

Setting condition	Contents
00	Not available
01	Available (factory setting)

H1 – Maintenance alarms

This function is used to display or hide maintenance alarms.

Setting condition	Contents
00	Display
01	Hide

H2 – Automatic control indication

This function is used to display or hide the automatic control indication.

Setting condition	Contents
00	Display
01	Hide

H3 – Operation mode change restriction

This function is used to configure restrictions to the operating mode.

Setting condition	Contents
00	Operating mode change disabled (factory setting)
01	Operating mode set by the central control + FAN mode
02	Unlimited operating mode

H4 – Operation modes for the ventilation unit with energy / heat recovery

This function is only available for the ventilation unit with energy / heat recovery.

Setting condition	Contents
00	Air conditioning only
01	Ventilation only
02	Air conditioning + ventilation

H5 – Central control available after forced stoppage

This function allows for central control after the forced stoppage of the unit.

Setting condition	Contents
00	Not available
01	Available

6.3.4 Optional functions for PC-ARH remote controls

Optional setting function

1. To access the optional setting mode with the unit at a standstill, press the MODE and FAN SPEED buttons at the same time for over 3 seconds until the image displayed on the screen changes:
2. Press TEMP▼ to change the setting elements and press TEMP▲ to change the setting options. See the table below for the setting elements and options.
3. To complete the optional setting mode, press the MODE and FAN SPEED buttons at the same time.

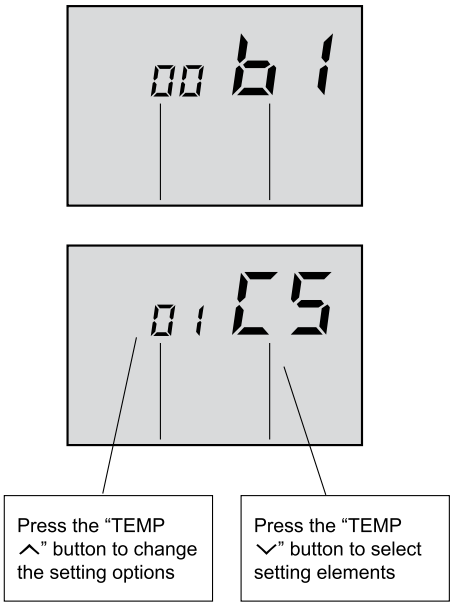

Code	Part	Setting options
b1	Heating temperature setting cancellation	00: Normal (temperature setting +4 °C)
		01: Cancelled (temperature setting)
		02: Temperature setting +2 °C *(1)
b8	Simultaneous cooling/ heating mode	00: Disabled
		01: Enabled
C5	Increase of indoor fan	00: Disabled
		01: High 1
		02: High 2
C8	Remote control thermostat (*2)	00: Disabled
		01: Change from indoor inlet thermistor to remote control thermostat
		02: Unit control using the average value of the indoor inlet thermistor and the remote control thermostat
F2	Main and secondary remote control setting	00: Main
		01: Secondary
FC	Minimum cooling temperature setting (*3)	00: Normal temperature range
		01-10: Maximum heating limit +1 °C - +10 °C
Fd	Maximum heating temperature setting (*4)	00: Normal temperature range
		01-10: Maximum heating limit -1°C - 10°C
H1	Maintenance alarm	00: Display
		01: Hide
H2	Non-automatic control indication	00: Display
		01: Hide
H3	Operating mode change restriction	00: Operating mode change disabled (hide operating mode) (factory setting)
		01: Operating mode set by the central control unit + FAN mode
		02: Unlimited operation
H4	Ventilation exchange (total heat exchanger only)	00: Air conditioning only
		01: Ventilation only
		02: Air conditioning + Ventilation
H5	Central control available after forced stoppage	00: Disabled
		01: Enabled

*(1): Some indoor units do not accept setting 02.

*(2): If installed next to a bedside table, use setting 00.

*(3): Applicable to FAN, COOL and DRY modes.

*(4): Applicable to HEAT mode.

*(5): Setting 01 is only available when a remote control is used. Do not use this setting when two controls (main/secondary) are used.

NOTE

- ***When several indoor units are connected, the same settings apply to them all.***
- ***To change the settings, wait for over 3 minutes after switching on the power supply.***
- ***Some indoor and outdoor units do not accept certain settings or do not include functions corresponding to the enabled settings. Check the available settings beforehand.***

6.3.5 Optional functions on wireless remote controls

PC-RLH8/9/11

Switch off all power supplies before setting the DIP switches.

Optional function	DIP switch			
	1	2	3	4
Secondary receiver setting	Available	–	–	–
Indoor unit identification	–	Only available for PC-ALHD, 11, 13		

PC-RLH8/9/11/13

1 Switch off all power supplies before setting the DIP switches.
2 To set the DIP switches, remove the two set screws and open the cover.

PC-ALH

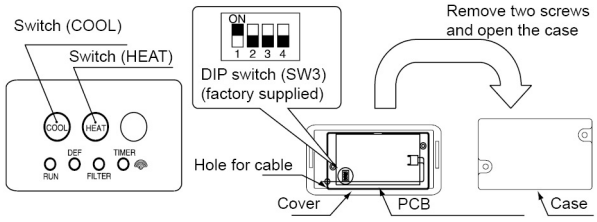

PC-ALHD

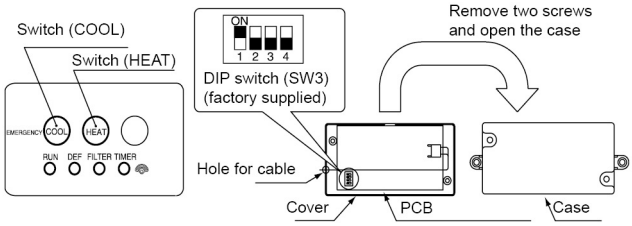

PC-ALHZ

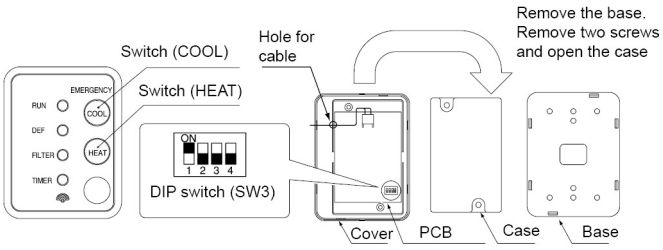

PC-ALHC

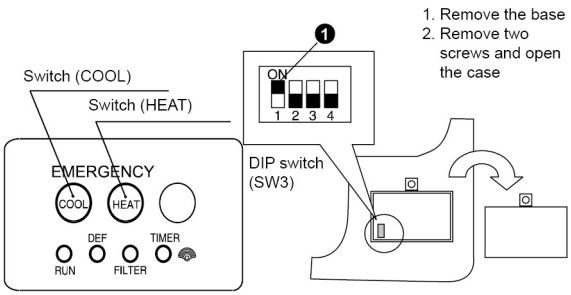

Secondary receiver setting

To enable this setting, enable terminal 1 on the DIP switch.

7. Test run

Index

7.1 Checks prior to the test run..... 232
7.1.1 Check points..... 232
7.1.2 Check procedure..... 232
7.2 Test procedure using the remote control..... 234
7.3 Test procedure using the wireless remote control..... 236
7.4 Test run check list..... 238

7.1 Checks prior to the test run

- Once installation is complete, carry out the test run in line with the procedure described below. The system can be handed over to the client once the test has been correctly completed.
- Prior instructions to carry out the test run:
  1. Verify the check points described in *Check points, see on page 232*.
  2. Carry out the check procedure described in *Check procedure, see on page 232*.
  3. Carry out the test run on the indoor units individually and in order.
  4. Check that the wiring and refrigerant piping connections are connect.
  5. Start the indoor units individually and in order. Check that they are correctly numbered.
  6. Carry out the test in line with the instructions given in section *Test procedure using the remote control, see on page 234*.

CAUTION

– ***Bear the following in mind while the system is running:***
  1. ***Do not touch any component in the discharge gas area. The compressor chamber and the piping are at temperatures of over 90 °C. They may cause burns.***
  2. ***Do not touch the magnetic breakers. This could cause a serious accident.***

– ***Wait for more than three minutes before touching electrical components after turning off the main switch.***

– ***Check that the gas and liquid line stop valves are fully open.***

7.1.1 Check points

- Do not start the system until all of the check points have been verified.
  1. Use a multimeter to measure the resistance between earth and the electrical component terminal. Check that the resistance is above 1 MΩ. Otherwise, do not start the system, locate the electrical leak and repair. Do not apply voltage to transmission terminals 1 and 2.
  2. Check that the outdoor unit stop valves are fully open. If so, start the system.
  3. Check that the power supply switch has been on for over 12 hours to heat up the compressor oil.

7.1.2 Check procedure

Check:

1. The gas and liquid line stop valves are fully open.
2. That there are no refrigerant leaks.

NOTE

Flare nuts may sometimes loosen due to vibrations during transportation.

3. Refrigerant piping and wiring form part of the same system.
4. The number of the DSW1, DSW6 and RSW1 units corresponds to the system.
5. The setting of the DIP switches on the printed circuit board of the indoor units is correct. Pay particular attention to the set different in height between the indoor and outdoor units. See the wiring diagrams for further details.
6. The power supply switch has been on for over 12 hours to heat up the compressor oil.
7. The wiring is correctly connected. See the wiring diagrams for further details.
8. Each terminal (L1, L2, L3, N or L1 and N) is correctly connected to the power supply.
9. The field-supplied electric components (main power switch protection fuse, circuit breaker without fuse, residual current breaker, wires, piping connectors and wire terminals) have been selected correctly in line with the electrical data given in the technical catalogue and in national and local regulations.
10. The power supply wiring terminal connection (L1 to L1 and N to N). Check the connection of the terminal boards running at 380 Vac. An incorrect connection may damage components.
11. Intermediate wire terminals between the indoor unit (operational line: terminals of every terminal board for 12 V) fit correctly. An incorrect connection may damage components.
12. The crankcase checker has been on for more than four hours. The device will not work unless it has been on for more than four hours.

13 The operating temperature:
- Cooling operation
  - **a** Indoor DB 21.5 °C and higher.
  - **b** Indoor WB 16 °C and higher.
  - **c** Outdoor DB 0 °C and higher.
- Heating operation
  - **a** Indoor DB 27 °C and below.

14 Use shielded cables for the installation to avoid electrical noise. This must be less than 1000 m in length and meet with national and local regulations.

15 Disconnect the KPI unit if it is connected to the indoor unit control. Otherwise the unit will not carry out the test run.

7.2 Test procedure using the remote control

Switch on the power supply to the indoor and outdoor units.

Select the TEST RUN mode using the remote control: press MODE and OK buttons at the same time for more than 3 seconds.

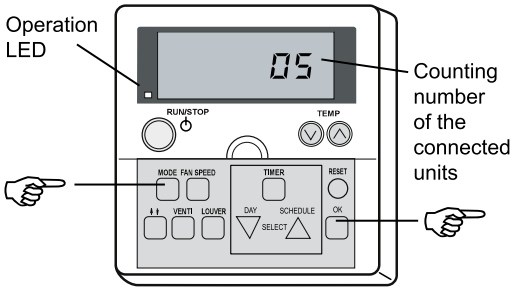

1 If the indication TEST RUN or the counter number of the units connected to the control (e.g. 05) is displayed on the remote control, the remote control cable connection is correct and you may go on to point 4.

2 If no indication is displayed or 00 is displayed or if the number of units indicated is below the actual number, this indicates a fault. In this case, go to point 3.

Remote control indication	Fault	Inspection points after switching off the power supply
No display.	• The power supply is not on • The remote control cable connection is incorrect. • The power line connection wires are incorrect or loose.	**a** The connection between the remote control and the unit is correct **b** Remote control cable connection points. **c** Remote control cable connector contact. **d** Adjustment of the screws on each terminal board.
The number on the connected unit counter is incorrect.	• The unit number setting is incorrect. • The control cable connection between each indoor unit is incorrect (when a remote control controls several units).	**a** Settings of the DIP switches on the printed circuit board. **b** Connection order of the jumper connection cable wires. **c** Jumper connection cable connection points. **d** Jumper connection cable connector contact.

3 Go back to point 1 after the check.

4 Select the TEST RUN mode by pressing MODE (COOL or HEAT).

5 Press RUN/STOP.

a The test run will begin. (The TEST RUN will take two hours. It can also be stopped by pressing RUN/STOP again).

b If the unit does not start or the on/off LED on the remote control flickers, this indicates a fault. Go to step 6.

6 Check the indication on the remote control:

Indication on the remote control	Unit status	Fault	Inspection points after switching off the power supply
The on/off LED flickers (once a second), along with the unit no. and alarm code 03.	The unit does not start.	The operating line connection wires are incorrect or loose.	**a** Connection order of each terminal board. The fuse on the PCB is likely to have been disabled during a incorrect wiring. The fuse can only be recovered once using the DSW on the PCB. Go to point **7**. **b** Adjustment of the screws on each terminal board. **c** Connection order of the power supply cables between the indoor and outdoor units.
The on/off LED flickers (once every 2 seconds).	The unit does not start.	The remote control cable connection is incorrect.	As in point 3 A, B and C
The flickering display is different to that indicated above.	The unit does not start. The unit starts and then stops.	The thermistor connection or that of other connectors is incorrect. The trip switch is triggered.	Use the alarm code table in the service manual to check this (service personnel are responsible for this check).
The on/off LED flickers (once every sec.). And the unit number 00, the alarm code dd and unit code E×00 flicker.	The unit does not start.	The remote control cable connection between the indoor units is correct	See the fault table in the technical catalogue (this must be performed by technical personnel).

Go back to point 1 after the check.

7 Instructions for recovery when the transmission circuit fuse is disabled
- **a** Correct the terminal board wiring.
- **b** Enable the 1st pin on DSW7 of the indoor unit PCB.

NOTE

Only for RPK-(1.0/1.5): Enable the second pin on DSW7 of the indoor unit PCB.

Except RPK-(1.0/1.5)FSN(H)2M	*Only for RPK-(1.0/1.5)FSN(H)2M*

7.3 Test procedure using the wireless remote control

NOTE

The test run cannot be carried out using the wireless remote control if the remote control is being used or if several units (SET-FREE, DC INVERTER and UTOPIA series) are running at the same time. In this case, carry out the test using the remote control.

Carry out the test run once the installation work is complete.

1 Fit the batteries in the remote control.

2 Switch on the power supply to the indoor and outdoor units.

3 The yellow LED on the indoor unit receiver flickers. While the LED is flickering, the indoor unit will not operate because it is starting up.

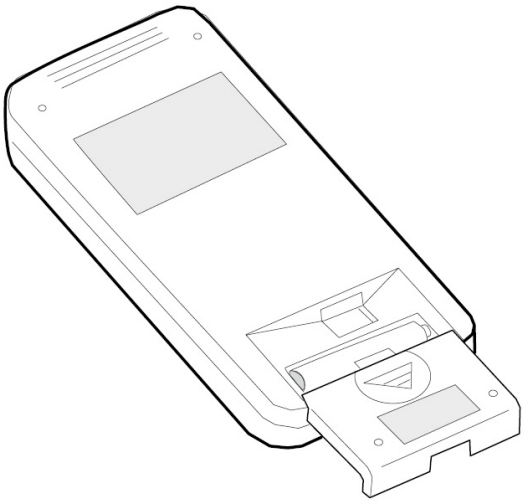

Select the TEST RUN mode

1 Press the SET and OFF TIME buttons at the same time for more than 3 seconds. The indication on the LCD screen of the remote control must be as follows. TEST RUN mode is not operational.

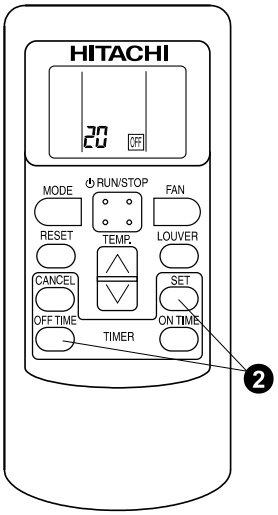

Set the operating mode by pressing the MODE button. TEST RUN mode is operational.

Start the test run using the RUN/STOP button. When the unit receives the commands, the yellow LED will light up for a moment.

Check that the device has received the commands and that the selected mode is correct.

In test run mode, the red LED lights up and the green TIMERLED flickers.

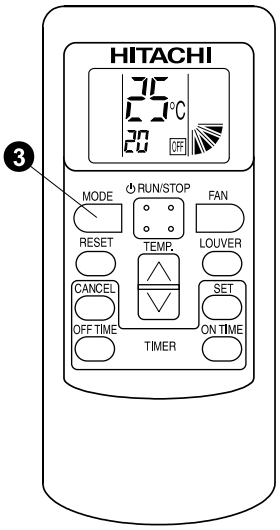

NOTE

In the case of the RPK model, the TIMER LED is off.

If the yellow LED does not light up, the remote control commands may not have reached the receiver. Send the commands again.

7.4 Test run check list

MODEL:	
SERIAL No.:	
COMPRESSOR MFG No.:	
NAME AND CUSTOMER ADDRESS:	
DATE:	

1 Does the indoor unit fan turn in the correct direction? _____

2 Has the unit been running for at least twenty (20) minutes? _____

3 Check the temperature of the room:

Inlet:	No. 1	DB____ °C WB____ °C	No. 2	DB____ °C WB____ °C	No. 3	DB____ °C WB____ °C	No. 4	DB____ °C WB____ °C
Outlet:		DB____ °C WB____ °C		DB____ °C WB____ °C		DB____ °C WB____ °C		DB____ °C WB____ °C
Inlet:	No. 5	DB____ °C WB____ °C	No. 6	DB____ °C WB____ °C	No. 7	DB____ °C WB____ °C	No. 8	DB____ °C WB____ °C
Outlet:		DB____ °C WB____ °C		DB____ °C WB____ °C		DB____ °C WB____ °C		DB____ °C WB____ °C

4 Check the outside temperature:

Inlet	DB _____°C	WB _____°C
Outlet	DB _____°C	WB _____°C

5 Check the temperature of the refrigerant: Operating mode (cooling or heating).

Discharge gas temperature	Td = _____°C
Liquid pipe temperature	Te = _____°C

6 Check the pressure:

Discharge pressure	Pd = _____ MPa
Suction pressure	Ps = _____ MPa

7 Check the voltage:

Rated voltage	_____ V	—	—
Operating voltage	L1–L2 _____ V	L1–L3 _____ V	L2–L3 _____ V
Starting voltage	_____ V	—	—
Phase imbalance	1-(V/Vm) = _____	—	—

8 Check the compressor inlet operating current

Input	_____ kW
Running current	_____ A

9 Is the refrigerant charge OK? _____

10 Do the operating control devices work correctly? _____

11 Do the safety devices work correctly? _____

12 Has the unit been checked for refrigerant leaks? _____

13 Is the unit clean inside and outside? _____

14 Are all the panels of the unit fastened securely? _____

15 Are the panels of the cabinet fastened so that they do not make any noise? _____

16 Is the filter clean? _____

17 Is the heat exchanger clean? _____

18 Are the stop valves open? _____

19 Does the water flow freely through the drainage hose? _____

HITACHI
Inspire the Next

8. Troubleshooting

Index

8.1 Self-check of the indoor unit PCB (for RPK only)..... 240
8.2 Electronic expansion valve check procedure..... 241
8.3 Procedure for checking fan motors in indoor units..... 242
8.4 Inspection of other components..... 246

8.1 Self-check of the indoor unit PCB (for RPK only)

- Self-check procedure using indoor PCB relays.
  - To check faults on the indoor unit PCB due to malfunctioning.
  - To check faults on the indoor unit PCB according to the results of the self-check using the CHECK button on the remote control and the auto-control function.

Enable switch 1 and disable switch 2

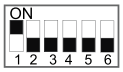

- Procedure
  1. Turn off the main power supply switch.
  2. Disconnect connectors CN7 and CN8.
  3. Adjust the DIP DSWN switch as shown below.
  4. Turn on the main power supply switch. Select the operating mode (see below).
     - Analogue test.
     - Relay test.
  5. On completion of the self-check, switch off the power supply and restart the DIP switch.

Self-check procedures RPK-FN(H)2M

Check point	Mode status		Confirmation method
Start the expansion valve and the automatic louver	The expansion valve fully open → fully closed. Louver stopped horizontally.		
Analogue test	If the air inlet temperature thermistors, the air discharge temperature thermistors and the antifreeze protection are normal, go to the next step of the procedure.		
Test on each relay	Fan 52H1, 2, 3 Low: Part of the wireless receiver. Red: Part of the wireless receiver. Green: Part of the wireless receiver. Yellow		Check the ON/OFF sound of the relays and that the LED is on.
Conclusion	Switch all DIP switches off and on as shown above.		

8.2 Electronic expansion valve check procedure

Valve position	Electronic expansion valve
Locked fully closed	Check the temperature of the piping in the heating process. Failure of the temperature to rise indicates a fault.
Locked slightly open	The following conditions indicate a fault: • Where the freeze protection thermistor temperature is lower than the intake air temperature. • Where the unit being inspected stops and other units continue operating in cooling mode.
Locked fully open	

8.3 Procedure for checking fan motors in indoor units

Name and abbreviation of the cable colours used:

Black	Brown	Red	Yellow	Green	Blue	Grey	Orange	White
BLK	BRN	RED	YEL	GRN	BLU	GRY	ORN	WHT

Indoor units	Power input	Wiring diagram	Cable no.	Resistance (Ω)
RCI-1.0FSN3E RCI-1.5FSN3E RCI-2.0FSN3E RCI-3.0FSN3E	56 W	DC motor	—	—
RCI-4.0FSN3E RCI-5.0FSN3E RCI-6.0FSN3E	108 W	DC motor	—	—
RCIM-1.0FSN2 RCIM-1.5FSN2 RCIM-2.0FSN2	52 W	DC motor	—	—
RCD-1.0FSN2 RCD-1.5FSN2 RCD-2.0FSN2	35 W	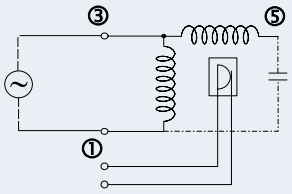	BLK1-3RED RED3-5WHT	159.00 92.00 to 20 °C
RCD-2.5FSN2 RCD-3.0FSN2	55 W		BLK1-3RED RED3-5WHT	70.90 81.70 to 20 °C
RCD-4.0FSN2	35 W x 2		BLK1-3RED RED3-5WHT	159.00 92.00 to 20 °C
RCD-5.0FSN2	55 W x 2		BLK1-3RED RED3-5WHT	70.90 81.70 to 20 °C
RPC-2.0FSN2E RPC-2.5FSN2E RPC-3.0FSN2E	65 W	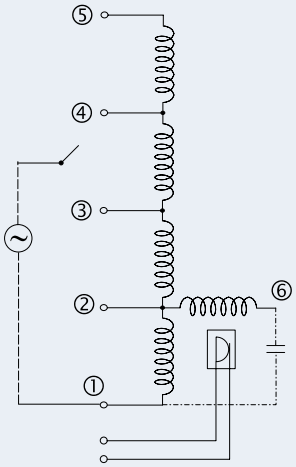	BLK1-2RED RED2-3YEL YEL3-4GRY GRY4-5BLU RED2-6WHT	59.90 16.90 15.80 15.80 63.60 to 20 °C

Indoor units	Power input	Wiring diagram	Cable no.	Resistance (Ω)
RPC-4.0FSN2E RPC-5.0FSN2E RPC-6.0FSN2E	180 W	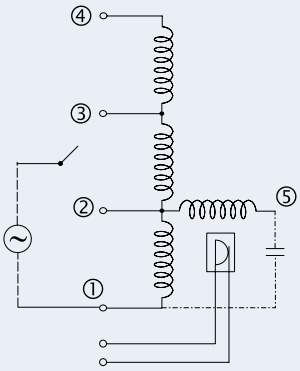	BLK1-2RED RED2-3YEL YEL3-4GRY RED2-6WHT	32.10 24.50 24.50 44.70 to 25 °C
RPI-0.8FSN2E RPI-1.0FSN2E	88 W	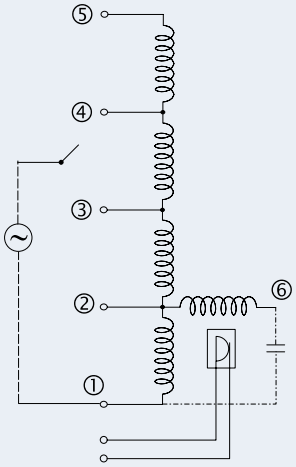	BLK1-2RED RED2-3BLU BLU3-4GRY GRY4-5YEL RED2-6WHT	23.60 23.50 23.40 23.50 38.40 to 20 °C
RPI-1.5FSN2E	85 W		BLK1-2RED RED2-3BLU BLU3-4GRY GRY4-5YEL RED2-6WHT	23.60 23.50 23.40 23.50 38.40 to 20 °C
RPI-2.0FSN3E RPI-2.5FSN3E	101 W 132 W		BLK1-2RED RED2-3BLU BLU3-4GRY GRY4-5YEL RED2-6WHT	75.60 12.80 12.70 25.10 181.00 to 20 °C

Indoor units	Power input	Wiring diagram	Cable no.	Resistance (Ω)
RPI-3.0FSN3E	150 W	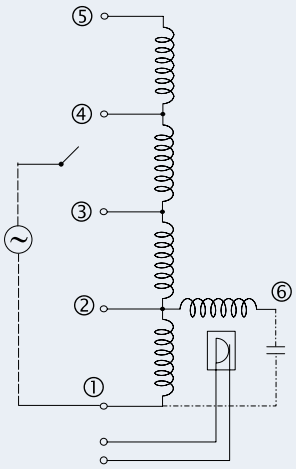	BLK1-2RED RED2-3BLU BLU3-4GRY GRY4-5YEL RED2-6WHT	19.60 15.70 16.00 16.00 45.20 to 20 °C
RPI-4.0FSN3E RPI-5.0FSN3E	225 W		BLK1-2RED RED2-3BLU BLU3-4GRY GRY4-5YEL RED2-6WHT	15.80 4.00 8.00 8.00 24.00 to 20 °C
RPI-6.0FSN3E	385 W		BLK1-2RED RED2-3BLU BLU3-4GRY GRY4-5YEL RED2-6WHT	10.40 4.70 9.02 4.80 24.60 to 20 °C
RPI-(8.0/10.0)FSN3E	1065 W		BLK1-2RED RED2-3BLU BLU3-4GRY GRY4-5YEL RED2-6WHT	5.00 0.75 0.75 0.75 9.20 to 20 °C
RPIM-0.8FSN2E (-DU) RPIM-1.0FSN2E(-DU) RPIM-1.5FSN2E(-DU)	68 W	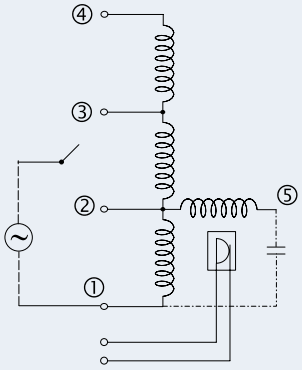	BLK1-2RED RED2-3BLU BLU3-4GRY RED2-6WHT	214.40 29.90 30.60 61.30 to 20 °C
RPK-1.0F2N(H)2M RPK-1.5F2N(H)2M RPK-2.0F2N2M	20 W	DC motor	—	
RPK-2.5F2N2M RPK-3.0F2N2M RPK-4.0F2N2M	40 W			

Indoor units	Power input	Wiring diagram	Cable no.	Resistance (Ω)
RPF(I)-1.0FSN2E RPF(I)-1.5FSN2E	28 W	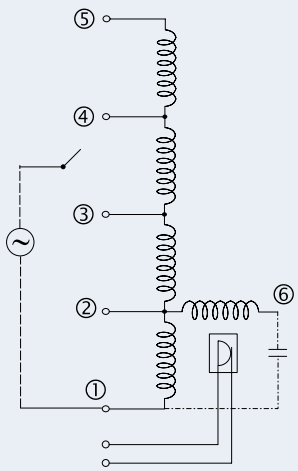	BLK1-2RED RED2-3WHT WHT3-4BLU BLU4-5ORN ORN5-6YEL	231.70 198.70 136.20 71.20 202.40 to 20 °C
RPF(I)-2.0FSN2E RPF(I)-2.5FSN2E	45 W		BLK1-2RED RED2-3WHT WHT3-4BLU BLU4-5ORN ORN5-6YEL	97.90 138.10 61.60 35.20 61.00 to 20 °C

8.4 Inspection of other components

Component name	Unit model	Model code	Resistance
Drain motor	RCI-(1.0-6.0)FSN3E RCIM-(1.0-2.0)FSN2E RPI-(2.0-6.0)FSN3E	ADP-1403	139.00 to 21 °C
	RCD-(1.0-5.0)FSN2E	KJV-1004	347.00 to 20 °C

HITACHI
Inspire the Next

9. Spare parts

Index

9.1 RCI-(1.0-1.6)FSN3E..... 248
9.2 RCIM-(1.0-2.0)FSN2..... 250
9.3 RCD-(1.0-3.0)FSN2..... 252
9.4 RCD-(4.0/5.0)FSN2..... 254
9.5 RPC-(2.0-6.0)FSN2E..... 256
9.6 RPI-(0.8-1.5)FSN2E..... 258
9.7 RPI-(2.0-3.0)FSN3E..... 260
9.8 RPI-(4.0-6.0)FSN3E..... 262
9.9 RPI-(8.0/10.0)FSN3E..... 264
9.10 RPIM-(0.8-1.5)FSN2E(-DU)..... 266
9.11 RPK-(1.0/1.5)FSN2M..... 268
9.12 RPK-(1.0/1.5)FSNH2M..... 270
9.13 RPK-2.0FSN2M..... 272
9.14 RPK-(2.5-4.0)FSN2M..... 274
9.15 RPF-(1.5-2.5)FSN2E..... 276
9.16 RPFI-(1.0-2.5)FSN2E..... 278
9.17 KPI-(252-2002)E2E..... 280
9.18 KPI-(502-2002)H2E..... 282
9.19 KPI-3002H2E..... 284
9.20 DX-Interface..... 286

9.1 RCI-(1.0-1.6)FSN3E

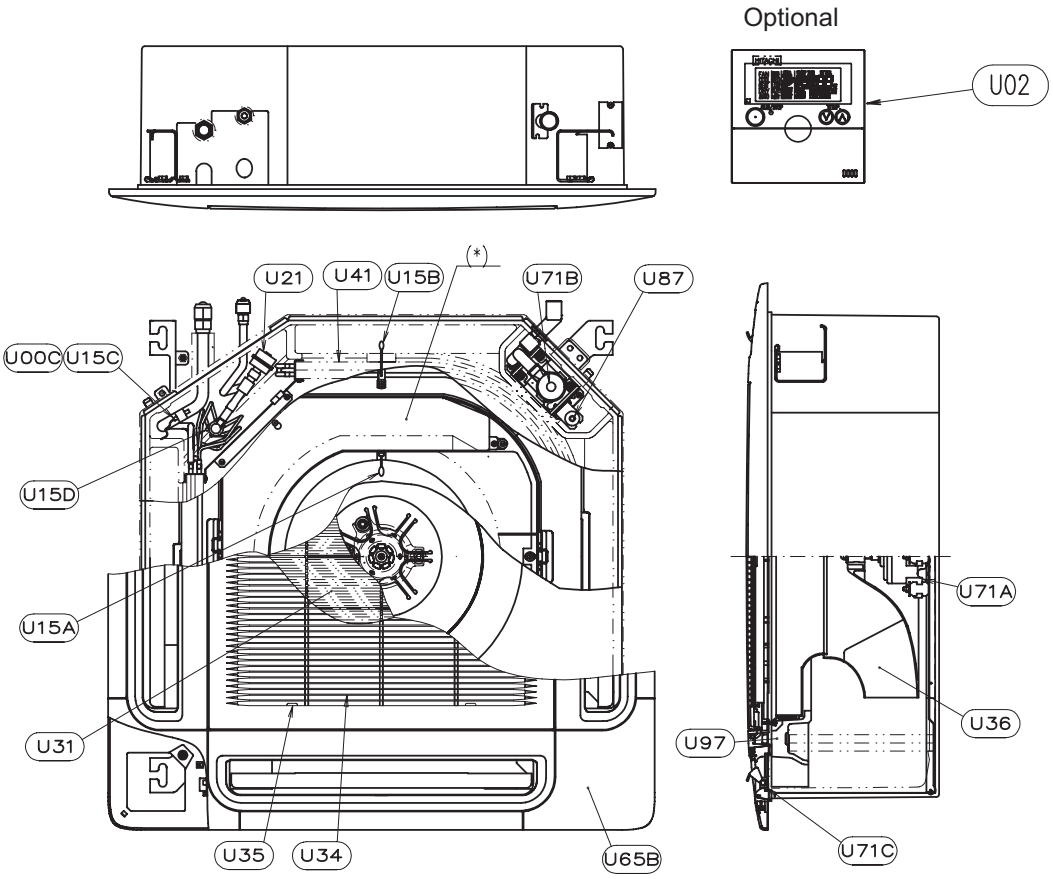

(*) Electrical Parts

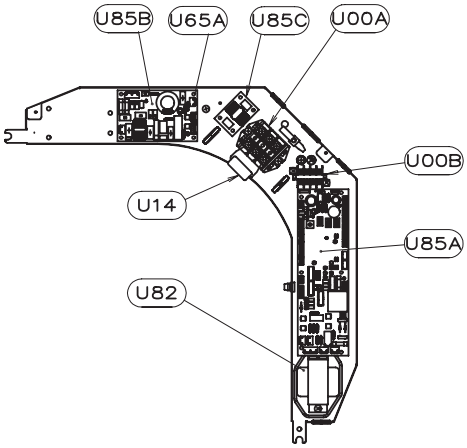

Drawing Number: EPN-0802A

Number	Part name	Remarks
U00A	Terminal board	—
U00B	Terminal board	—
U00C	P-Spring	Gas
U02	Remote control switch	PC-P2HTE / PC-ART (optional)
U14	Condenser assy	—
U15A	Thermistor	Air inlet (THM1)
U15B	Thermistor	Air outlet (THM2)
U15C	Thermistor	Gas pipe (THM5)
U15D	Thermistor	Liquid pipe (THM3) (freeze protection)
U21	Expansion valve	—
U31	Air filter	For air panel P-N23WA
U34	Air grille	For air panel P-N23WA
U35	Grille knob	For air panel P-N23WA
U36	Turbo fan	Fan runner
U41	Heat exchanger	Assy
U65A	Spacer	—
U65B	CP cover	For air panel P-N23WA
U71A	Fan motor	—
U71B	Drain pump	—
U71C	AS motor	For air panel P-N23WA
U82	Transformer	—
U85A	PI064 EX	PCB
U85B	PI012 assy	PCB
U85C	PI979 assy	PCB
U87	Float switch	—
U97	Drain pan	Assy

9.2 RCIM-(1.0-2.0)FSN2

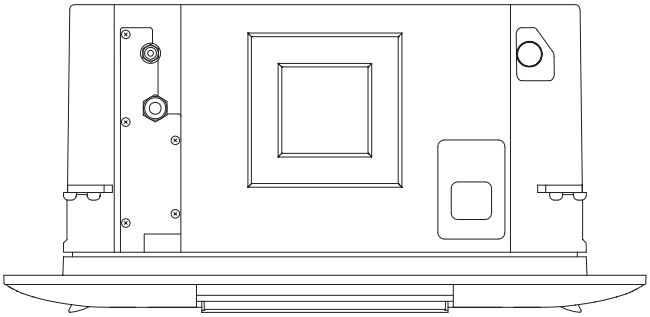

Optional

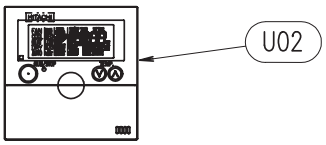

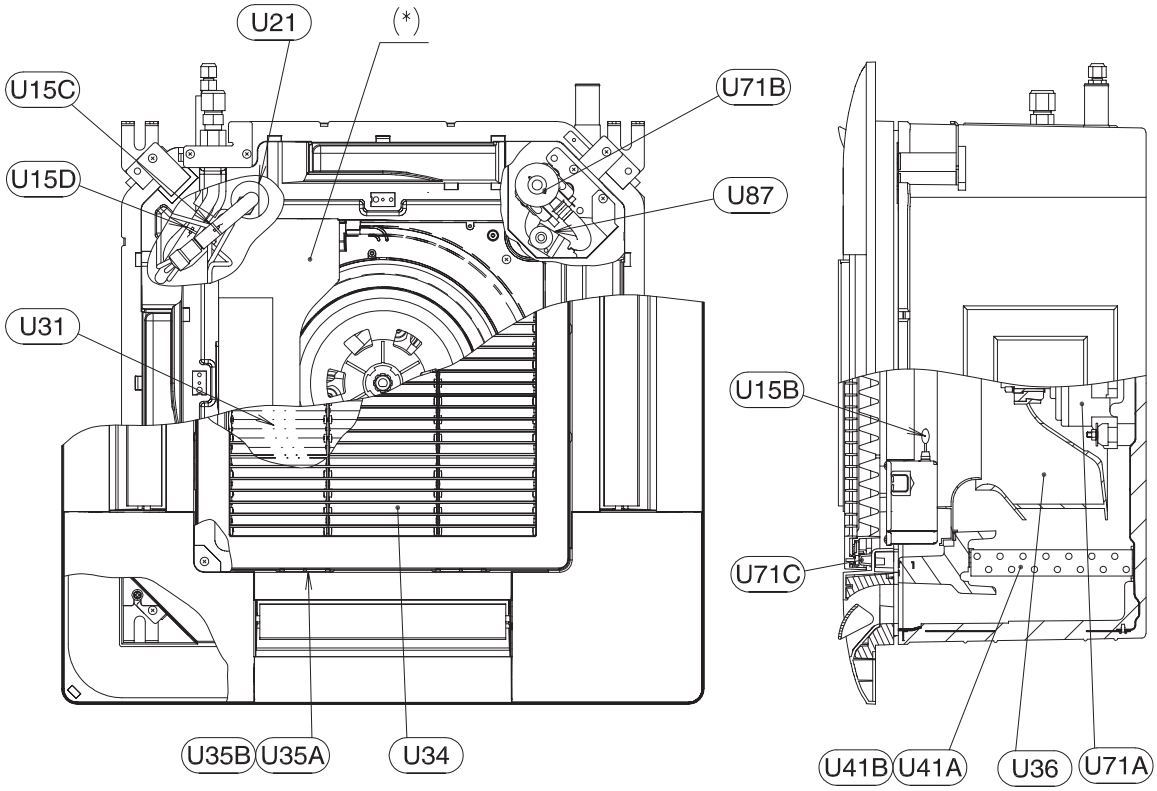

(*) Electrical parts

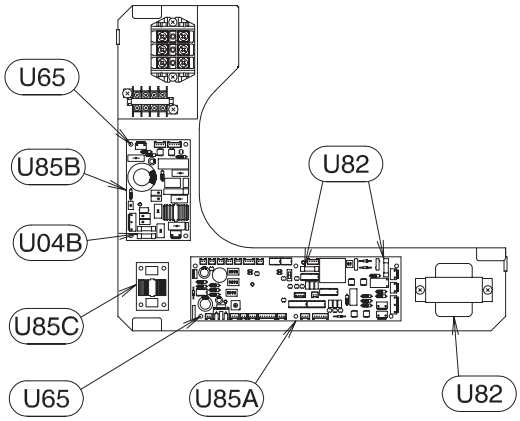

Drawing number: EPN-0606A-3B

Number	Part name	Remarks
U02	Remote control swicth	PC-P2HTE / PC-ART (optional)
U04A	Fuse	0.5A for control circuit
U04B	Fuse	5A for power source
U15B	Thermistor	THM2 air outlet
U15C	Thermistor	THM3 freeze protection (Liquid)
U15D	Thermistor	THM5 gas
U21	Expansion valve	—
U31	Air filter	For air panel P-N23WAM
U34	Air grille	For air panel P-N23WAM
U35A	Knob	For air panel P-N23WAM
U35B	Knob	For air panel P-N23WAM
U36	Runner	—
U41A/B	Heat exchanger	Assembly
U65	Spacer	For PCB
U71A	Fan motor	52W
U71B	Fan motor	Discharge mechanism
U71C	AS motor	For air panel P-N23WAM
U82	Transformer	—
U85A	Printed circuit board	Main
U85B	Printed circuit board	Power supply
U85B	Printed circuit board	Noise protection
U87	Float switch	—

9.3 RCD-(1.0-3.0)FSN2

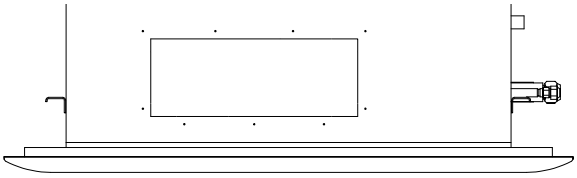

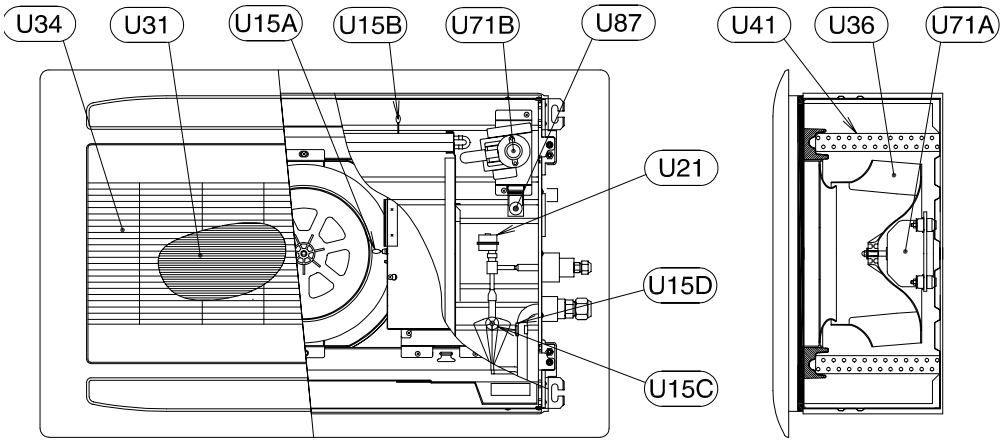

Electrical Parts

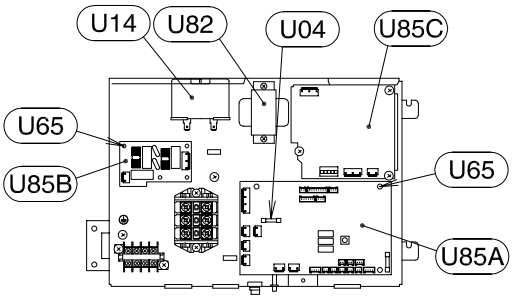

Drawing Number:SPN200506

Number	Part name	Remarks
U04	Fuse	5 A for the control circuit
U14	Capacitor	4/5 MF 440 VAC
U15A	Thermistor	THM1 thermistor for air inlet
U15B	Thermistor	THM2 thermistor for air outlet
U15C	Thermistor	THM3 thermistor, protection against liquid freezing
U15D	Thermistor	THM5 thermistor for gas
U21	Expansion valve	—
U31	Air filter	For air panel P-N23DWA
U34	Air grille	For air panel P-N23DWA (with air filter)
U36	Fan	—
U41	Heat exchanger	—
U65	Plastic material	—
U71A	Motor	35 W fan
U71B	Motor	For the discharge drain mechanism
U71C	Motor	For the P-N23DWA motor rotation assembly
U82	Transformer	—
U85A	Printed circuit board	Main PCB
U85B	Printed circuit board	Noise protection
U85C	Printed circuit board	Modulation band pulse
U87	Float sensor	—

9.4 RCD-(4.0/5.0)FSN2

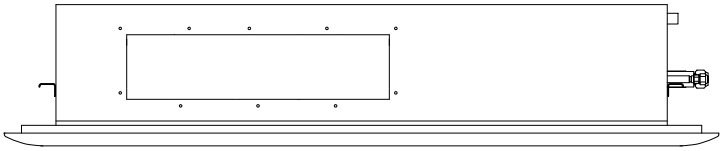

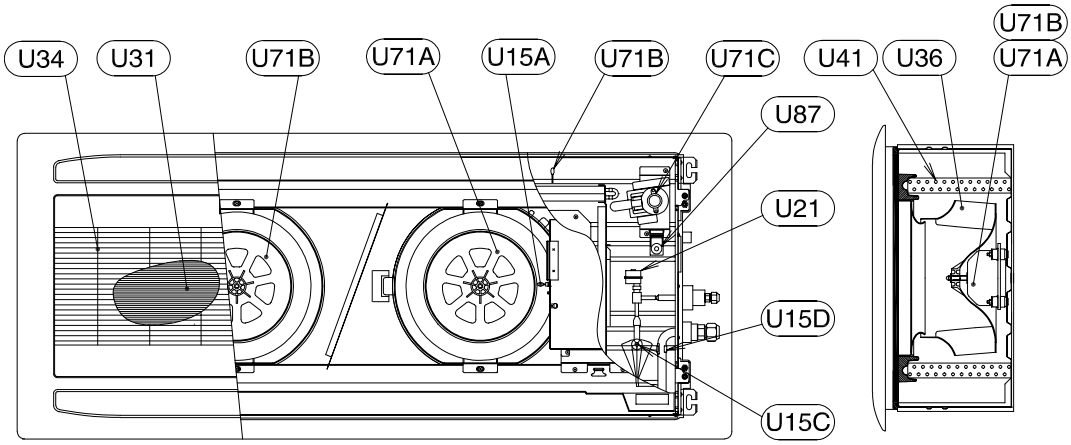

Electrical Parts

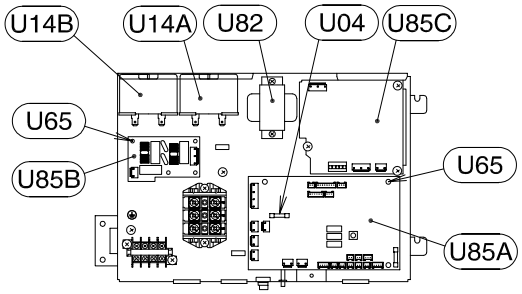

Drawing number: SPN200506

Number	Part name	Remarks
U04	Fuse	5 A for the control circuit
U14A	Capacitor	4 MF 440 VAC
U14B	Capacitor	5 MF 440 VAC
U15A	Thermistor	THM1 thermistor for air inlet
U15B	Thermistor	THM2 thermistor for air outlet
U15C	Thermistor	THM3 thermistor, protection against liquid freezing
U15D	Thermistor	THM5 thermistor for gas
U21	Expansion valve	—
U31	Air filter	For air panel P-N23DWA
U34	Air grille	For air panel P-N23DWA (with air filter)
U36	Fan	—
U41	Heat exchanger	—
U65	Plastic material	—
U71A	Motor	355 W fan
U71B	Motor	55 W on other side
U71B	Motor	for the discharge drain mechanism
U71C	Motor	For the P-N23DWA motor rotation assembly
U82	Transformer	—
U85A	Printed circuit board	Main PCB
U85B	Printed circuit board	Noise protection
U85C	Printed circuit board	Modulation band pulse
U87	Float sensor	—

9.5 RPC-(2.0-6.0)FSN2E

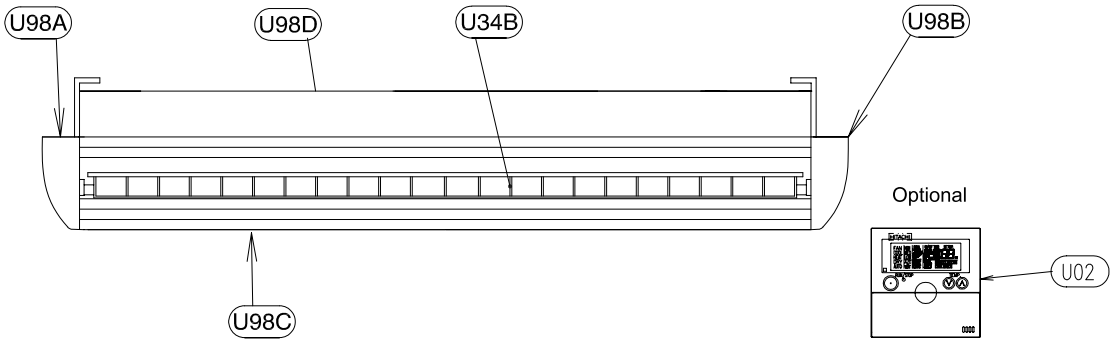

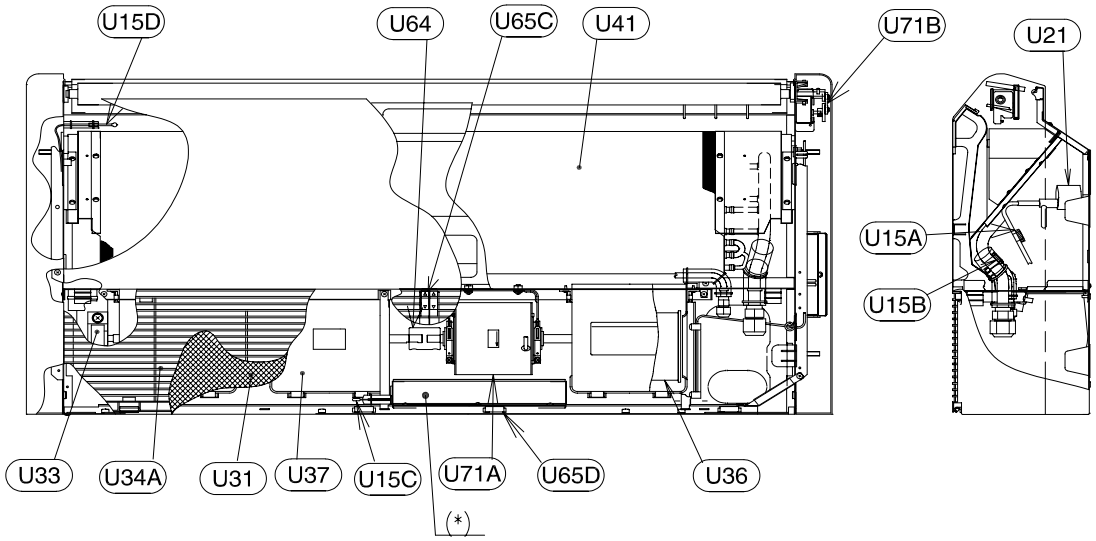

Electrical Parts

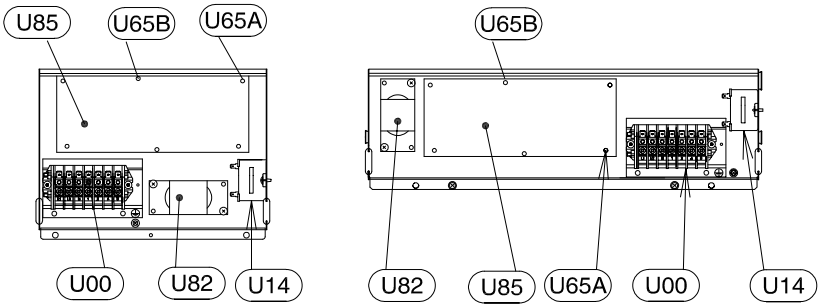

Drawing number: EP-801-1A

Number	Part name	Remarks
U00	Terminal board	
U02	Remote control SW	Assembly of (components + harness)
U14	Capacitor	4 uF/5 uF
U15A	Thermistor	THM3 thermistor for liquid piping
U15B	Thermistor	THM5 thermistor for gas pipe
U15C	Thermistor	THM1 thermistor for air inlet
U15D	Thermistor	THM2 thermistor for air outlet
U21	Expansion valve	—
U31	Air filter	—
U33	Bearing	—
U34A	Air inlet grille	Inlet air
U34B	Grille assembly	Outlet air
U37	Fan frame	—
U41	Heat exchanger	Assembly
U64	Coupling	—
U65A	Spacer	—
U65B	Push spacer	—
U65C	Grille knob	
U65D	Grille support	
U71A	Fan motor	—
U71B	AS motor	—
U82	Transformer	—
U85	Printed circuit board	-
U98A	Left cover	Left part
U98B	Right cover	Right part
U98C	Lower cover assembly	Lower part
U98D	Upper cover assembly	Upper part

9.6 RPI-(0.8-1.5)FSN2E

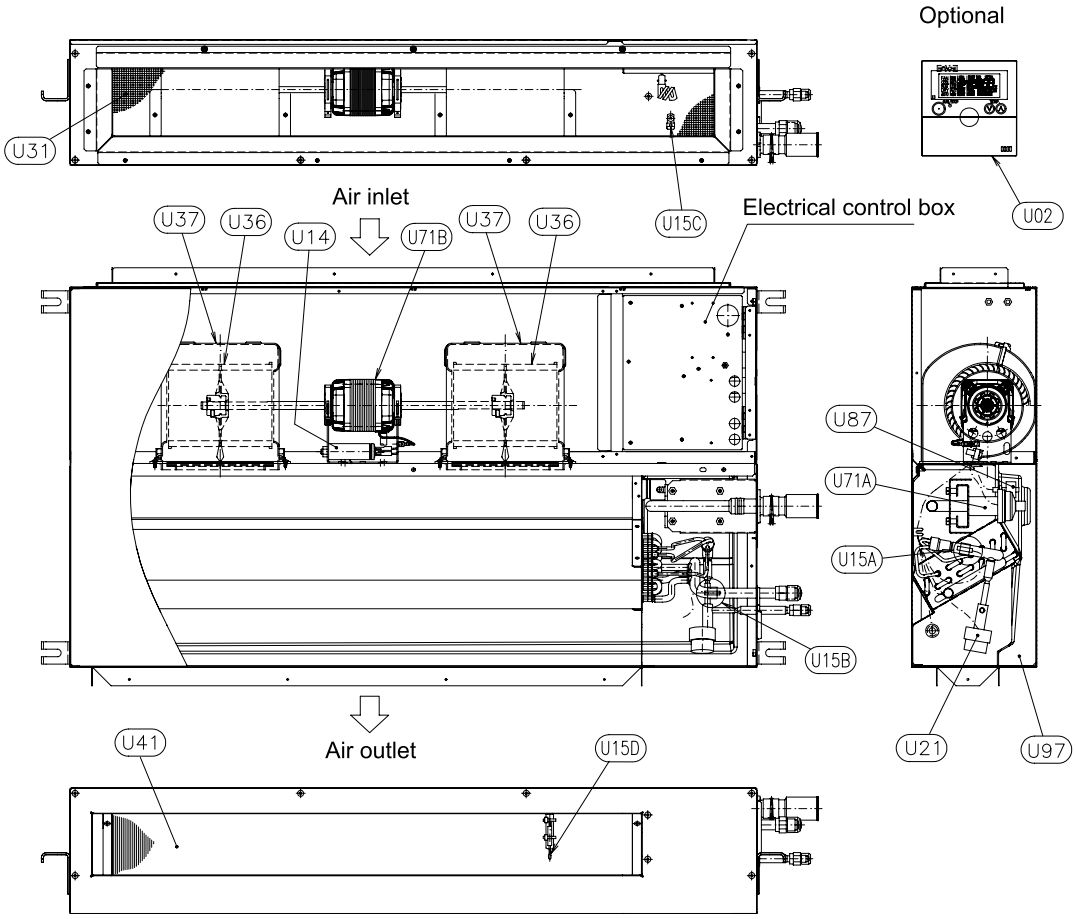

Location of electrical equipment

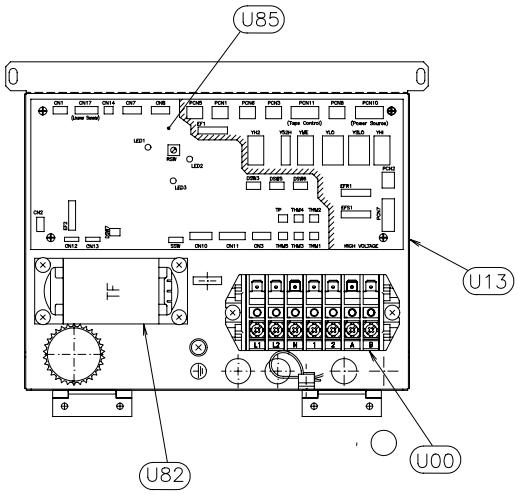

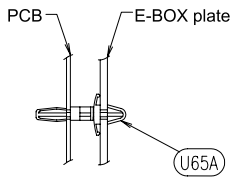

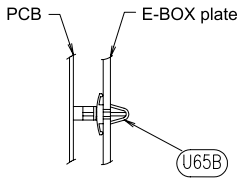

Drawing number: EPN-0806A-2B

Number	Part name	Remarks
U00	Printed circuit board terminals	—
U02	Remote control	PC-ART (optional)
U13	Electrical box	Assembly of (components + harness)
U14	Capacitor	3.15 uF / 4 uf
U15A	Thermistor	For the liquid piping
U15B	Thermistor	For the gas pipe
U15C	Thermistor	For the air inlet
U15D	Thermistor	For the air outlet
U21	Expansion valve	—
U31	Filter	—
U36	Runner	—
U37	Fan frame	—
U41	Heat exchanger	Assembly
U65A	Spacer	For the fixed PCB
U65B	Push spacer	For the fixed PCB
U71A	Drain pump	Discharge mechanism
U71B	Fan motor	—
U82	Transformer	—
U85	Printed circuit board	PI073 (main PCB)
U87	Float sensor	—
U97	Drain pan	Assembly

HITACHI
Inspire the Next

9.7 RPI-(2.0-3.0)FSN3E

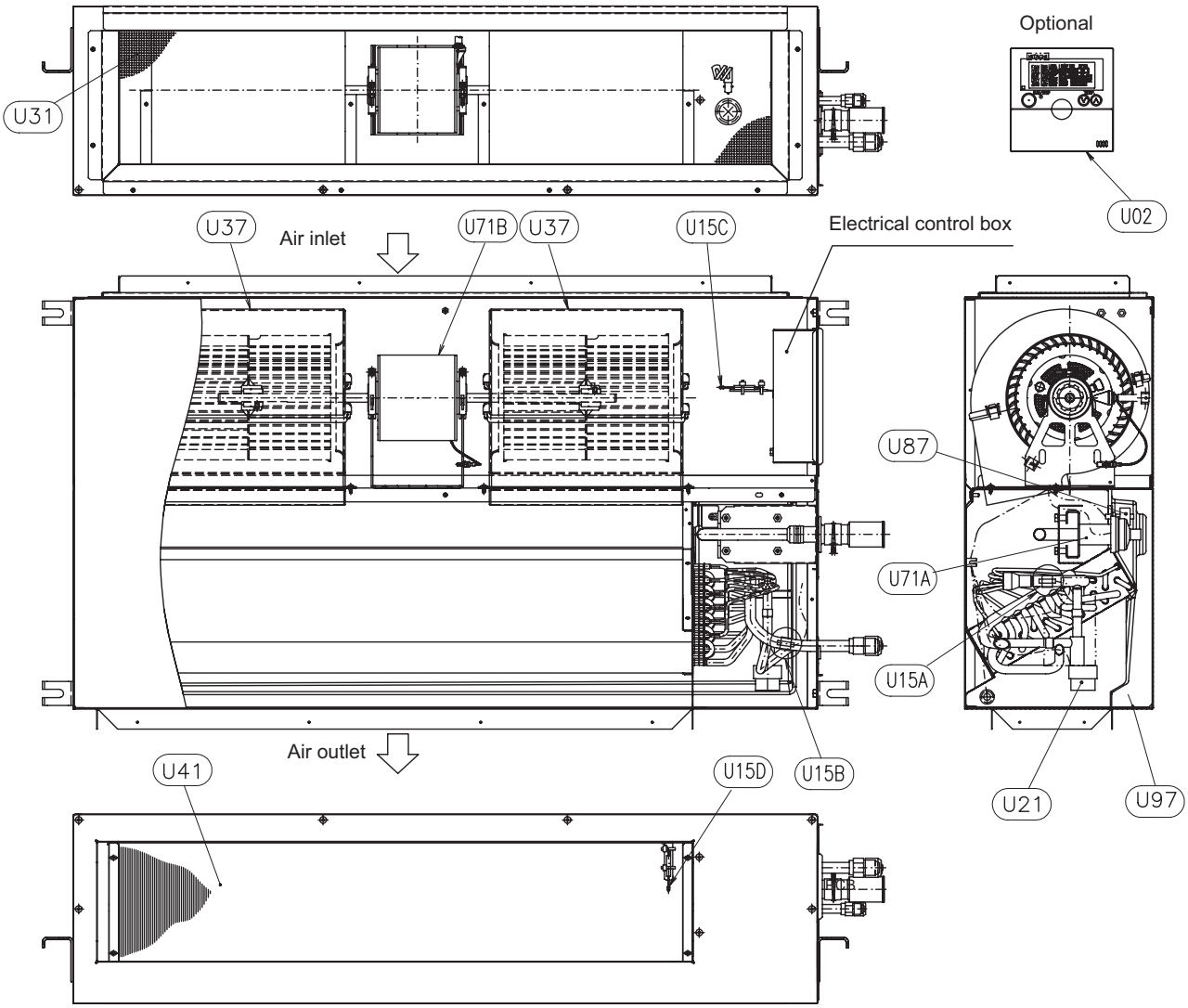

Location of electrical equipment

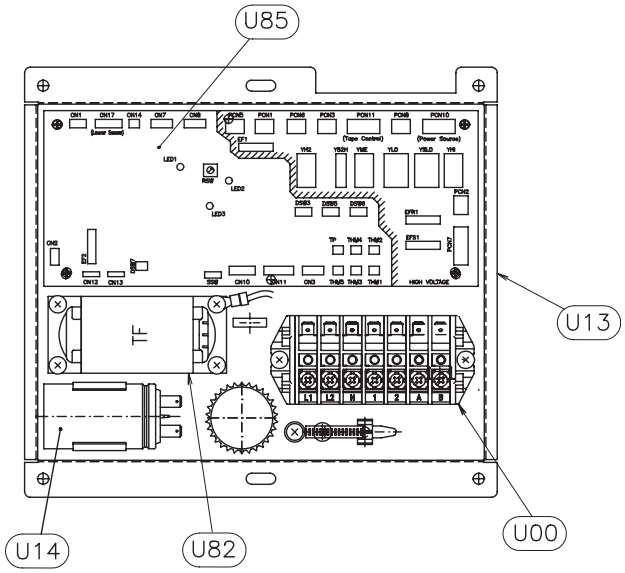

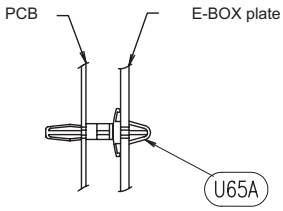

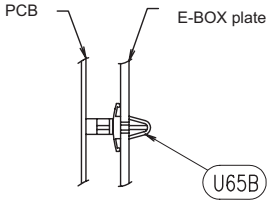

Drawing number: EPN-0806A-3B

Number	Part name	Remarks
U00	Terminal board	—
U02	Remote control SW	PC-P2HTE/PC-ART (optional)
U13	Electrical box	—
U14	Capacitor	2.5μF, 8.0μF, 5.0μF, 3.15μF, 6.3μF
U15A	Thermistor	THM3 for liquid pipe
U15B	Thermistor	THM5 for gas pipe
U15C	Thermistor	THM1 for inlet air
U15D	Thermistor	THM2 for outlet air
U31	Filter	—
U36	Runner	—
U37	Fan casing	—
U41	Heat exchanger	Assembly
U65A	Spacer	For PCB fixing
U65B	Push spacer	For PCB fixing
U71A	Drain pump	—
U71B	Fan motor	—
U82	Transformer	—
U85	Printed circuit board	—
U87	Float switch	—
U97	Drain pan	Assembly

9.8 RPI-(4.0-6.0)FSN3E

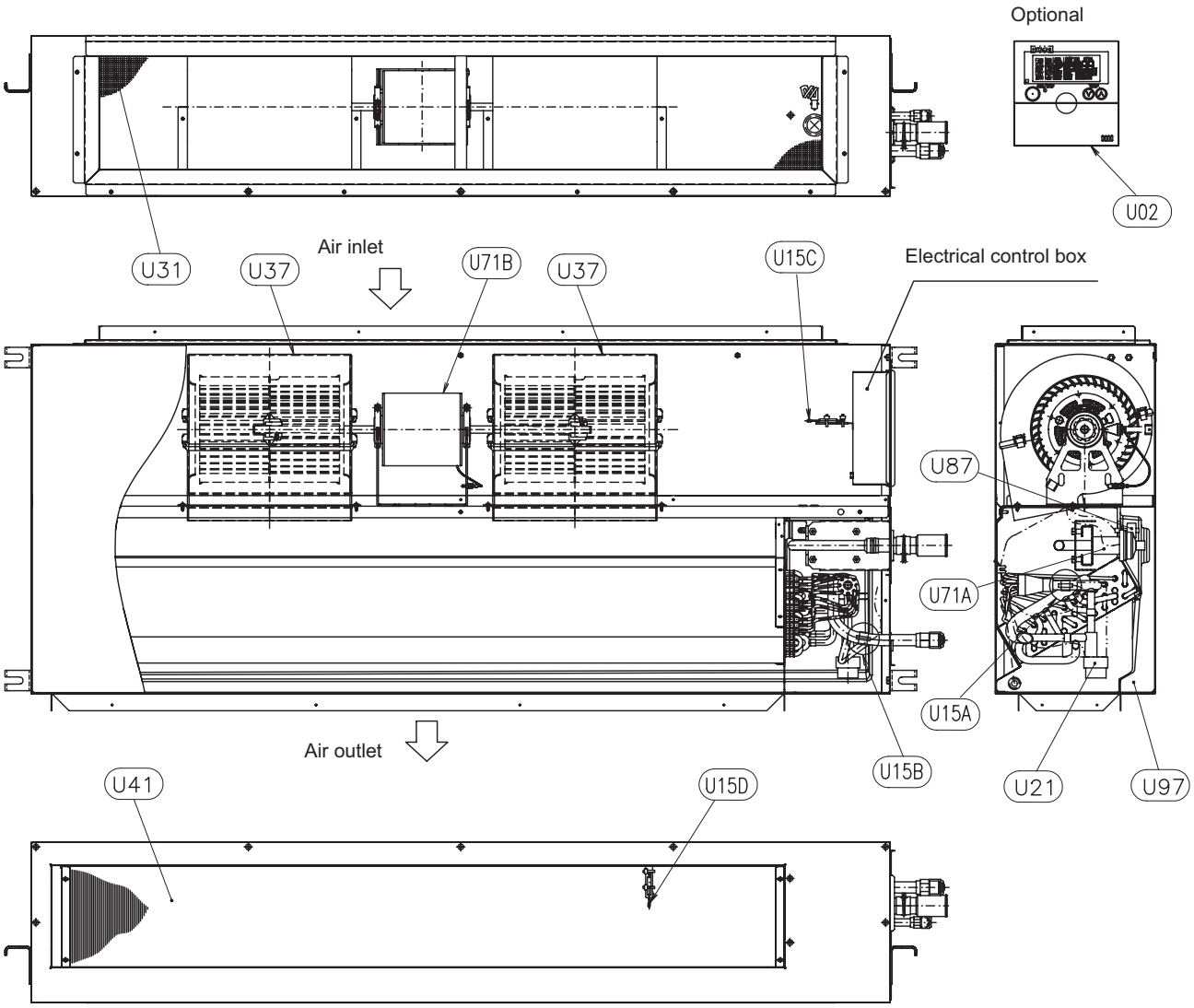

Location of electrical equipment

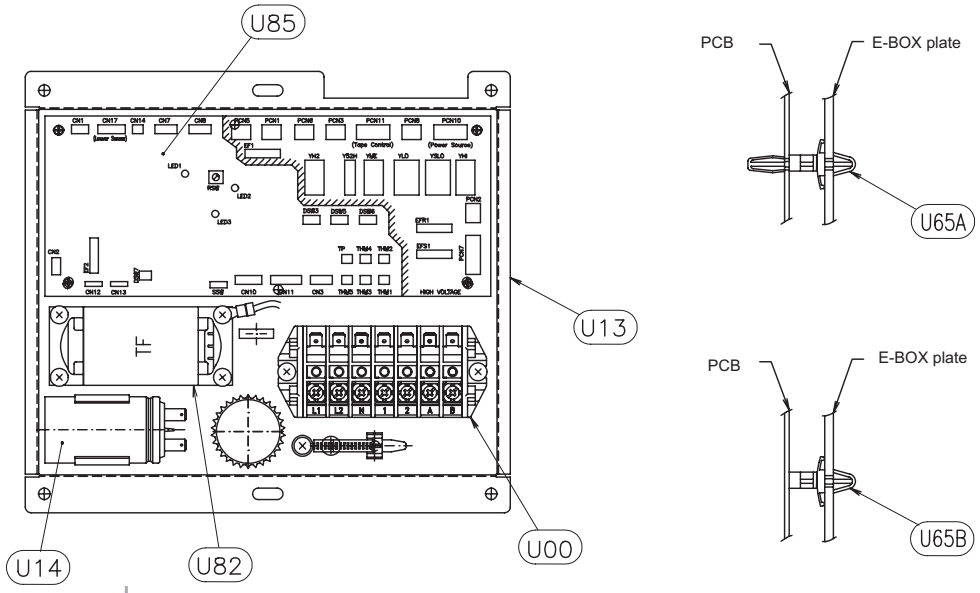

Number	Part name	Remarks
U00	Terminal board	—
U02	Remote control SW	PC-P2HTE/PC-ART (optional)
U14	Capacitor	2.5μF, 8.0μF, 5.0μF, 3.15μF, 6.3μF
U15A	Thermistor	THM3 for liquid pipe (freeze protection)
U15B	Thermistor	THM5 for gas pipe
U15C	Thermistor	THM1 for inlet air
U15D	Thermistor	THM2 for outlet air
U31	Filter	—
U36	Runner	—
U37	Fan casing	—
U41	Heat exchanger	Assembly
U65A	Spacer	For PCB fixing
U65B	Push spacer	For PCB fixing
U71A	Drain pump	—
U71B	Fan motor	—
U82	Transformer	—
U85	Printed circuit board	—
U87	Float switch	—
U97	Drain pan	Assembly

9.9 RPI-(8.0/10.0)FSN3E

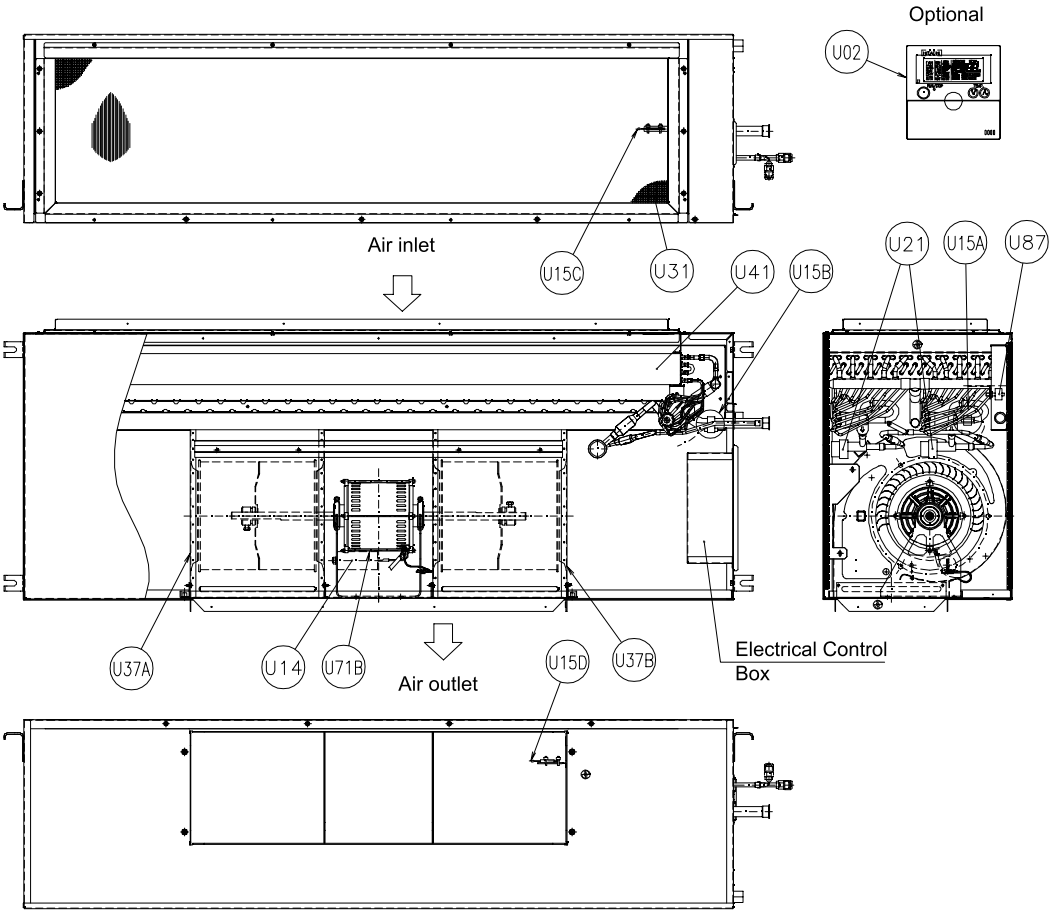

Location of electrical equipment

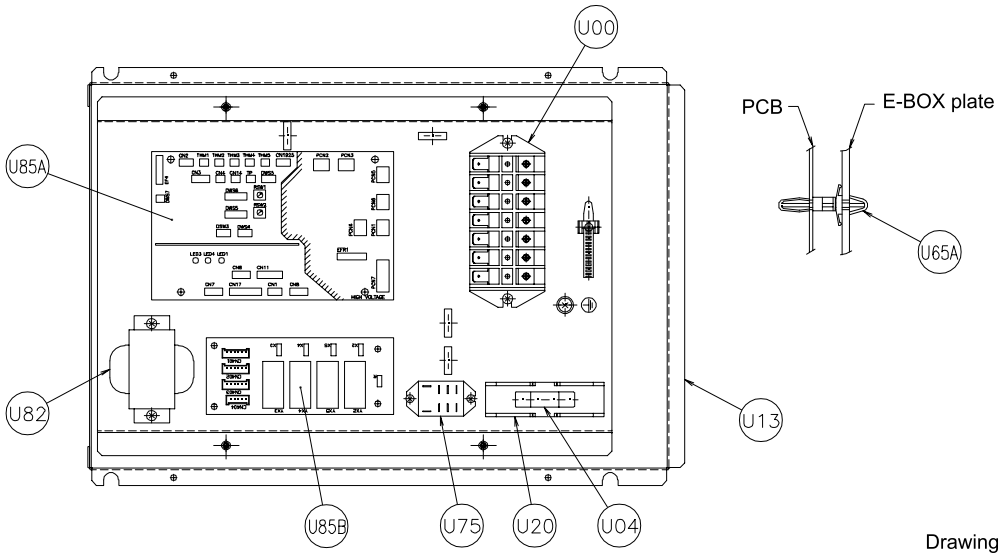

Drawing number: EPN0811B

Number	Part name	Remarks
U00	Printed circuit board terminals	—
U02	SW remote control	PC-ART (optional)
U04	Fuse	10 A
U13	Electrical box	Assembly of (components + harness)
U14	Capacitor	20 uF / 25 uF
U15A	Thermistor	THM3 thermistor for liquid piping
U15B	Thermistor	THM5 thermistor for gas pipe
U15C	Thermistor	THM1 thermistor for air inlet
U15D	Thermistor	THM2 thermistor for air outlet
U20	Fuse holder	—
U21	Expansion valve	—
U31	Filter	—
U36	Runner	—
U37A	Fan casing/Runner R	Fan casing + runner right
U37B	Fan casing/Runner L	Fan casing + runner left
U41	Heat exchanger	Assembly
U65A	Spacer	For the fixed PCB
U71A	Fan motor assembly	(Stay + base + motor + casing + runners)
U71B	Fan motor	—
U82	Transformer	—
U85A	Printed circuit board	PI065 assembly
U85B	PCB relay	—
U87	Float sensor	—

9.10 RPIM-(0.8-1.5)FSN2E(-DU)

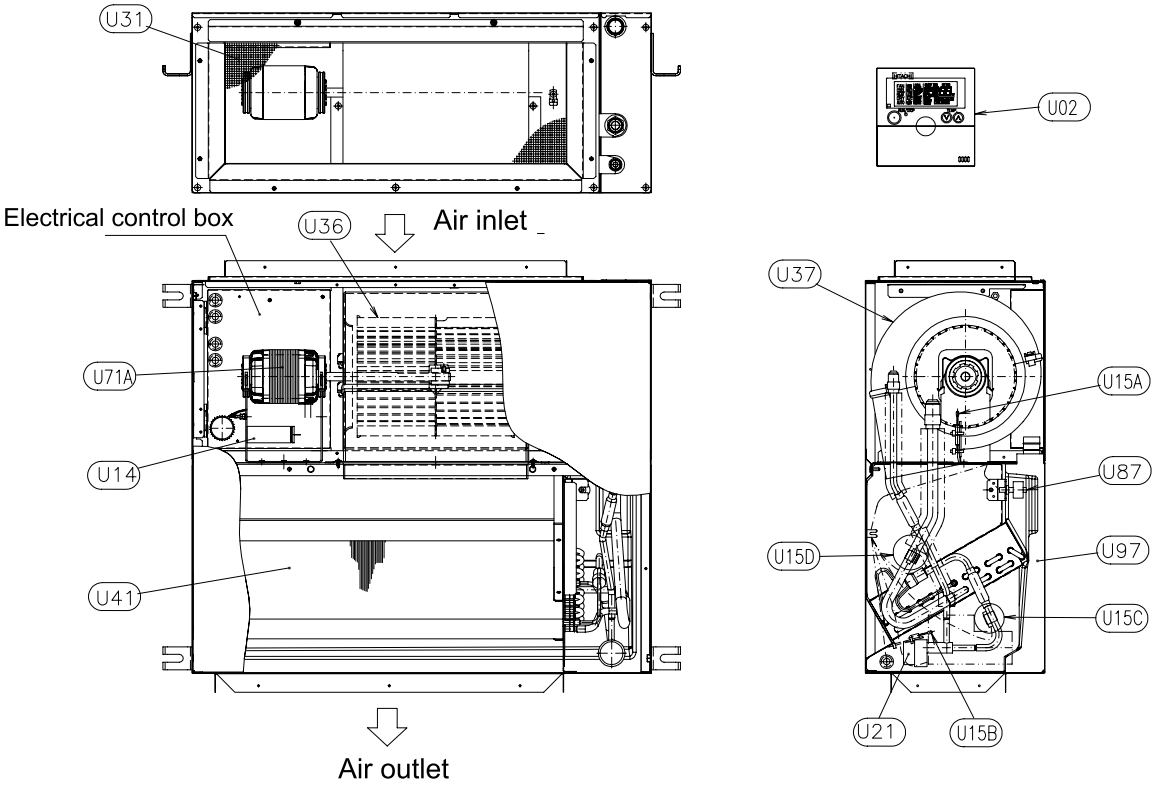

Location of electrical equipment

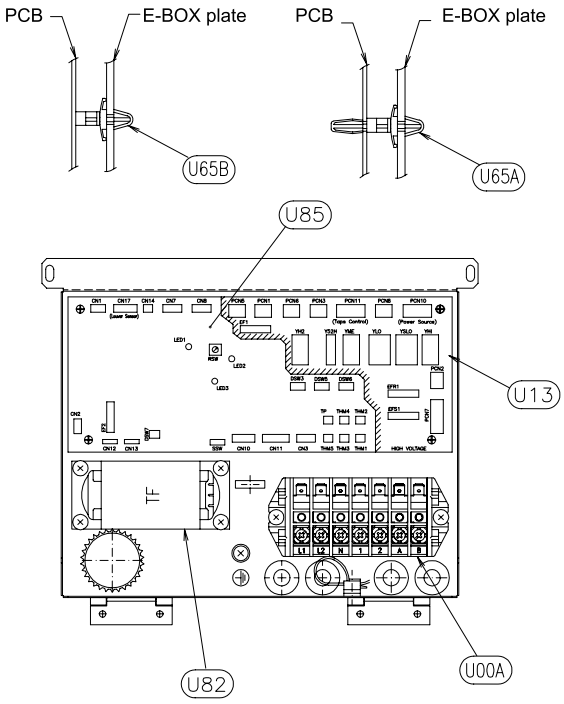

Drain pump kit DU-M1E
(optional accessory)

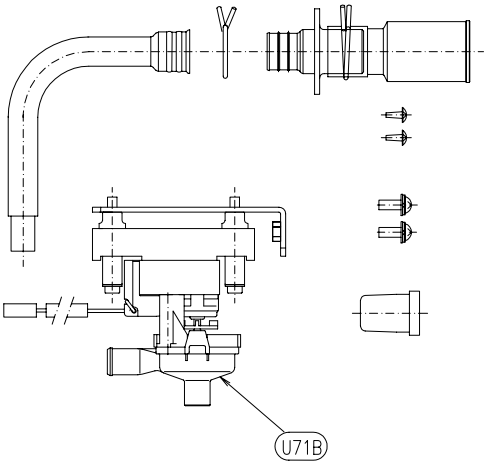

Drawing number: EPN-0806A-1B

Number	Part name	Remarks
U00A	Printed circuit board terminals	—
U02	SW remote control	PC-ART (optional)
U13	Electrical box	Assembly of (components + harness)
U14	Capacitor	2.5 uF
U15A	Thermistor	THM3 thermistor for liquid piping
U15B	Thermistor	THM5 thermistor for gas pipe
U15C	Thermistor	THM1 thermistor for air inlet
U15D	Thermistor	THM2 thermistor for air outlet
U21	Expansion valve	—
U31	Filter	—
U36	Fan casing/Runner	Fan casing + runner
U37	Fan casing/Runner	Fan casing + runner
U41	Heat exchanger	Assembly
U65A	Spacer	For the fixed PCB
U65B	push spacer	For the fixed PCB
U71A	Fan motor	—
U71B	Drain pump	Kit DU-M1E (optional)
U82	Transformer	—
U85	Printed circuit board	PI073 (main PCB)
U87	Float sensor	—
U97	Drain pan	Assembly

9.11 RPK-(1.0/1.5)FSN2M

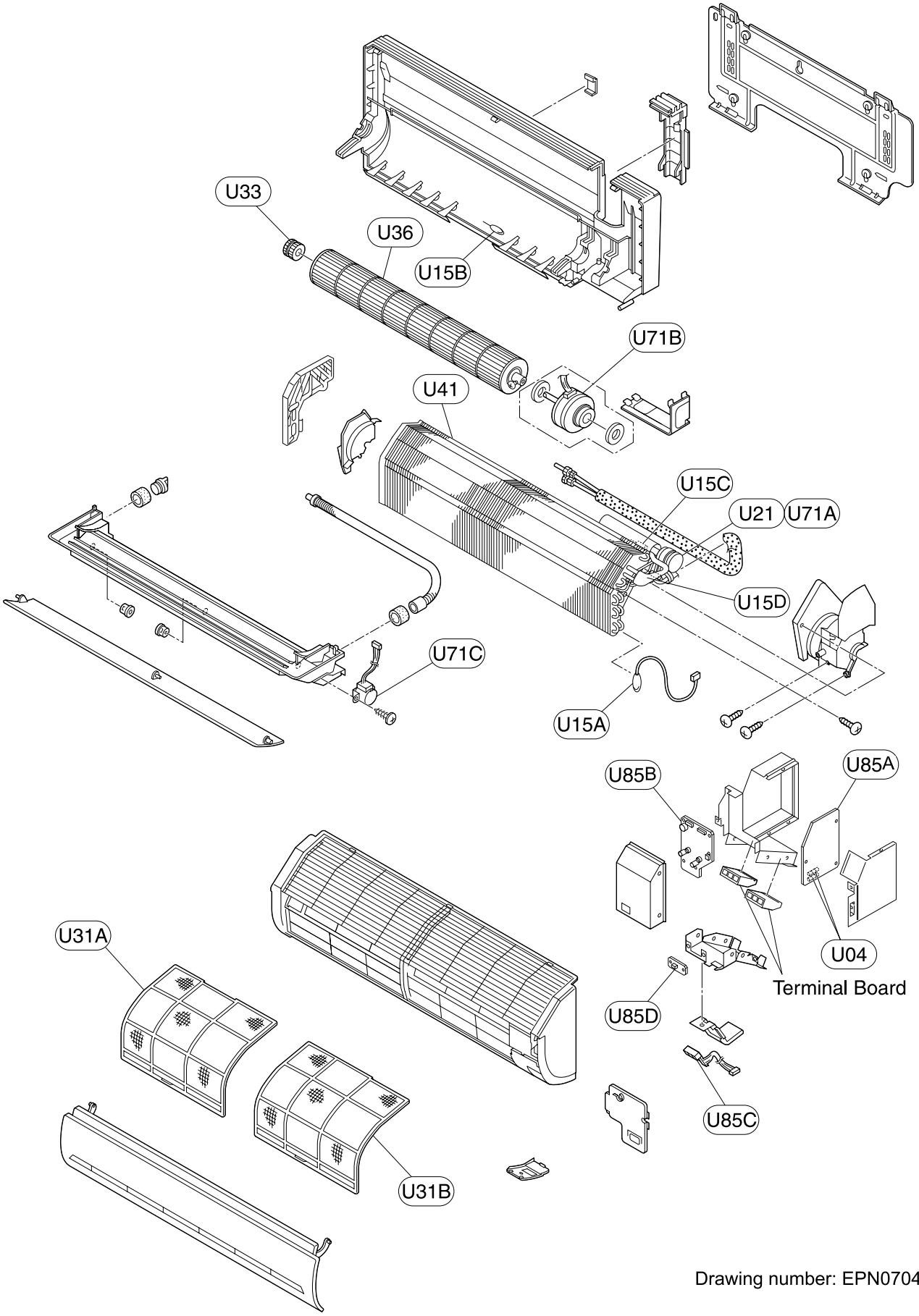

Drawing number: EPN0704A

Number	Part name	Remarks
U02	Remote control	PC-LH3 (optional)
U04A	Fuse	5 A (for unit control)
U15A	Thermistor	THM1 thermistor for air inlet
U15B	Thermistor	THM2 thermistor for air outlet
U15C	Thermistor	THM3 thermistor for protection against liquid freezing.
U15D	Thermistor	THM5 thermistor for gas
U21	Expansion valve	—
U31A	Right air filter	For right part
U31B	Left air filter	For left part
U33	Bearing	—
U36	Fan	—
U41	Heat exchanger	—
U71A	Fan motor	Expansion valve
U71B	AS motor	20 W fan
U71C	Motor	—
U85A	Printed circuit board	Power
U85B	Printed circuit board	Control
U85C	Printed circuit board	Receiver
U85D	Printed circuit board	Service

9.12 RPK-(1.0/1.5)FSNH2M

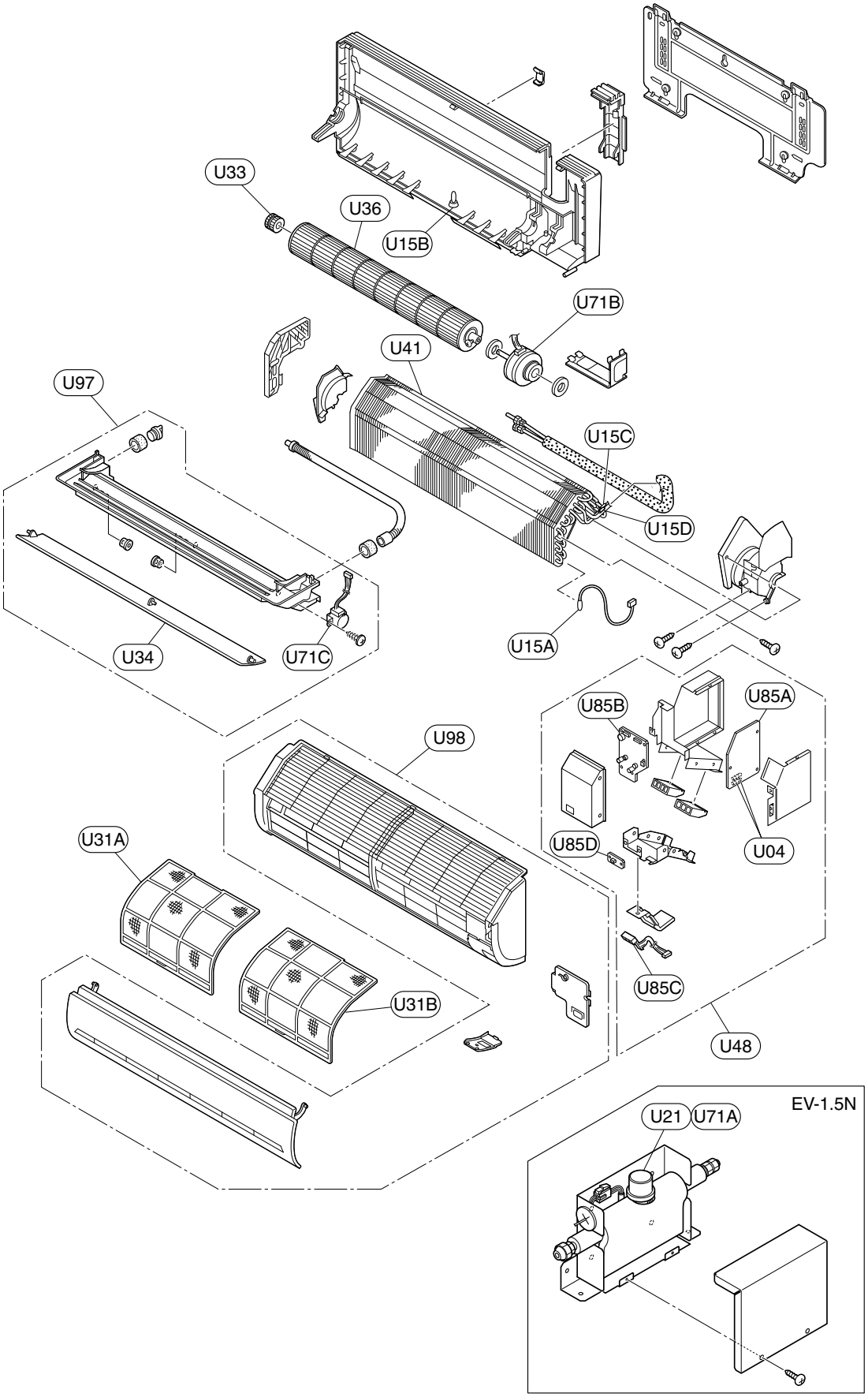

Expansion Valve Kit

Number	Part name	Remarks
U04	Fuse	—
U15A	Thermistor	Air inlet thermistor THM1
U15B	Thermistor	Air outlet thermistor THM2
U15C	Thermistor	Ice protection thermistor THM3
U15D	Thermistor	Gas thermistor THM5
U21	Expansion valve	-
U31A	Air filter	Left side
U31B	Air filter	Right side
U33	Bearing	-
U34	Louver	-
U36	Fan	-
U41	Heat exchanger	Assembly
U48	Electrical box	-
U71A	Motor	Expansion valve
U71B	Motor	Fan
U71C	Motor	-
U85A	Printed circuit board	Power
U85B	Printed circuit board	Control
U85C	Printed circuit board	Receiver
U85D	Printed circuit board	Service
U97	Drain pan	Assembly
U98	Front cover	Assembly

9.13 RPK-2.0FSN2M

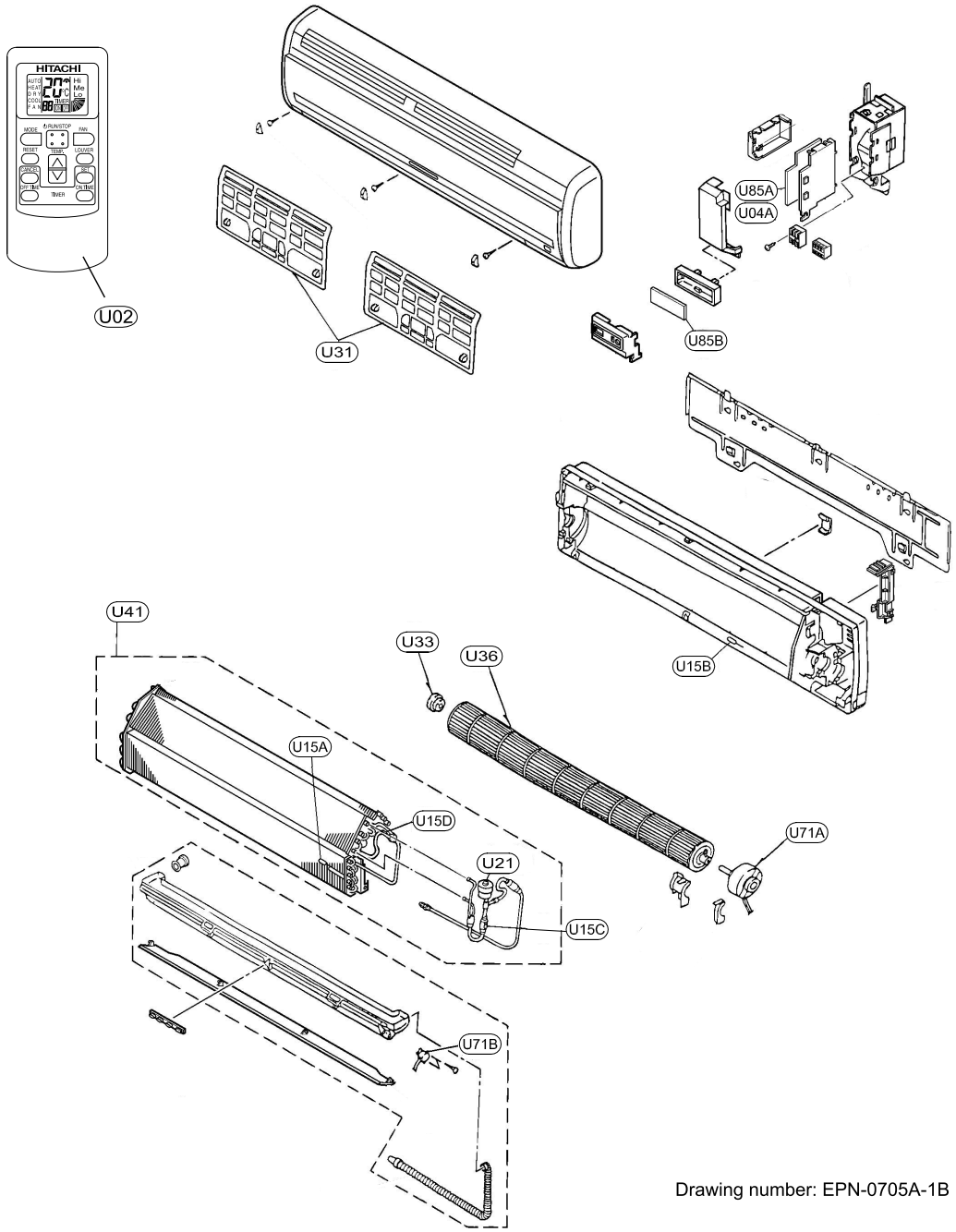

Drawing number: EPN-0705A-1B

Number	Part name	Remarks
U02	SW remote control	PC-LH3 (optional)
U04A	Fuse	5 A (for unit control)
U15A	Thermistor	THM1 thermistor for air inlet
U15B	Thermistor	THM2 thermistor for air outlet
U15C	Thermistor	THM3 thermistor for protection against liquid freezing.
U15D	Thermistor	THM5 thermistor for gas.
U21	Expansion valve	—
U31A	Right air filter	For right part
U31B	Left air filter	For left part
U33	Bearing	—
U36	Fan	—
U41	Heat exchanger	—
U71A	Fan motor	30 W
U71B	AS motor	For auto swing louver
U85A	Printed circuit board	—
U85B	Printed circuit board	For wireless reception
U85C	Printed circuit board	LED display

9.14 RPK-(2.5-4.0)FSN2M

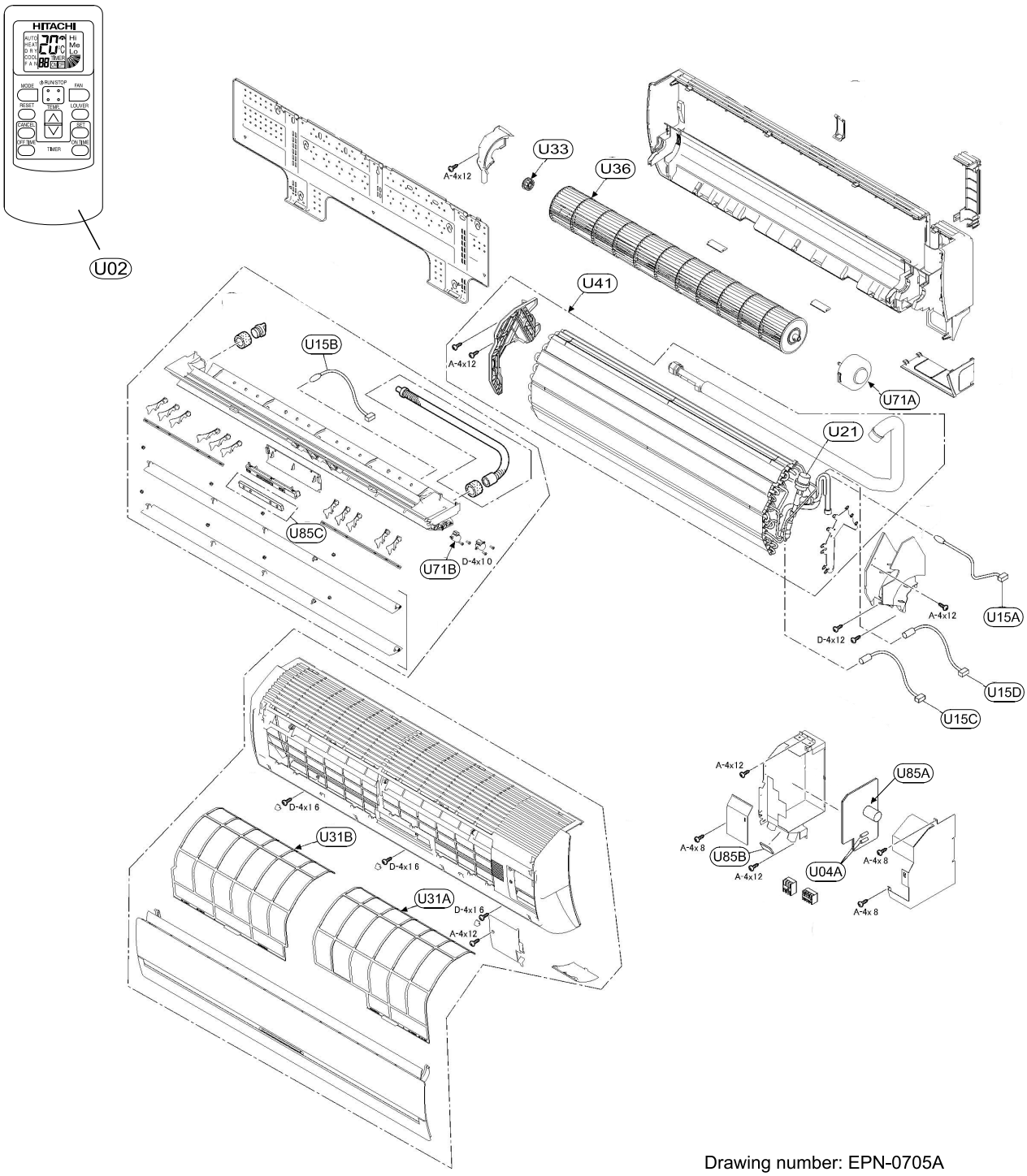

Drawing number: EPN-0705A

Number	Part name	Remarks
U02	SW remote control	PC-LH3A (optional)
U04A	Fuse	5 A (for unit control)
U15A	Thermistor	THM1 thermistor for air inlet
U15B	Thermistor	THM2 thermistor for air outlet
U15C	Thermistor	THM3 thermistor for protection against liquid freezing.
U15D	Thermistor	THM5 thermistor for gas.
U21	Expansion valve	—
U31A	Right air filter	For right part
U31B	Left air filter	For left part
U33	Bearing	—
U36	Fan	—
U41	Heat exchanger	—
U71A	Fan motor	30 W
U71B	AS motor	For auto swing louver
U85A	Printed circuit board	—
U85B	Printed circuit board	For wireless reception
U85C	Printed circuit board	LED display

9.15 RPF-(1.5-2.5)FSN2E

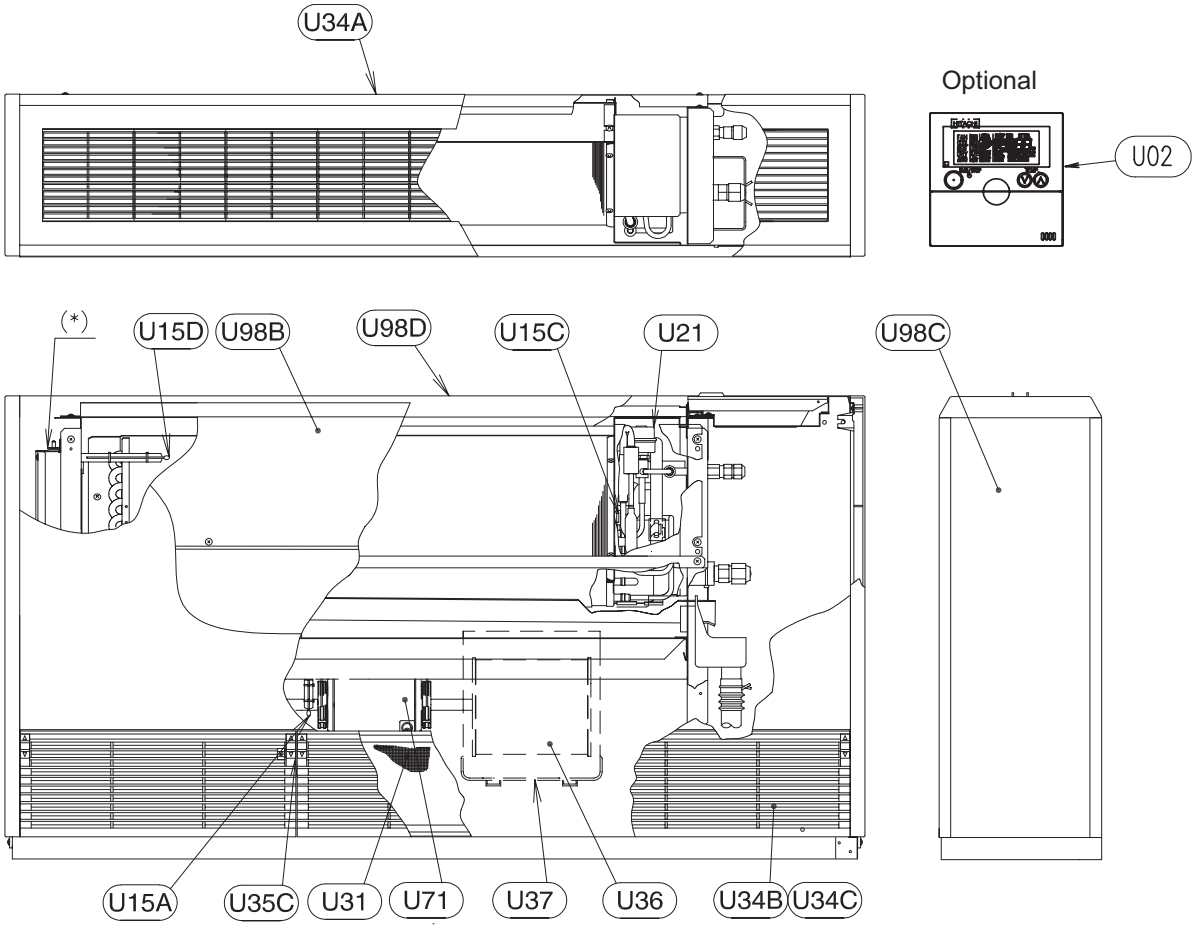

(*) Electrical Parts

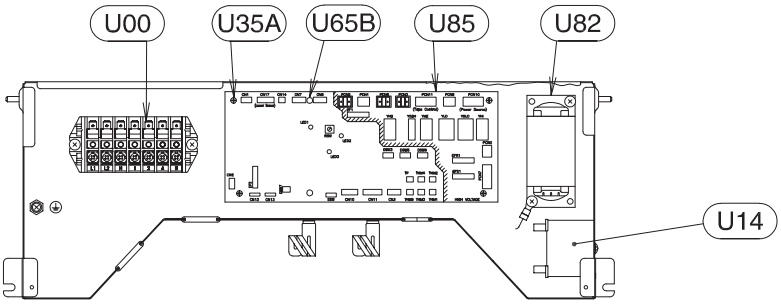

Drawing number: EPN-808A-1A

Number	Part name	Remarks
U00	Terminal board	—
U02	Remote control switch	PC-P2HTE/PC-ART
U12	Exp. valve cord	—
U13	Exp. valve cord	—
U14	Capacitor	2μF / 4μF
U15A	Thermistor	THM1 Air Inlet
U15B	Thermistor	THM5 Gas
U15C	Thermistor	THM3 Liquid (freeze protection)
U15D	Thermistor	THM2 Air Outlet
U21	Expansion valve	—
U31	Air filter	—
U34A	D grille	Air outlet
U34B	Air inlet grille	Air inlet
U34C	Air inlet grille	Air inlet
U36	Runner	—
U37	Fan casing	—
U41	Heat exchanger	Assembly
U65A	Spacer	For fixing PCB
U65B	Push spacer	For fixing PCB
U65C	Grille knob	—
U71	Fan motor	—
U82	Transformer	—
U85	Printed circuit board	—
U98A	Back cover	Assembly
U98B	Front cover	Assembly
U98C	Side cover	Assembly
U98D	Upper cover	—

9.16 RPFI-(1.0-2.5)FSN2E

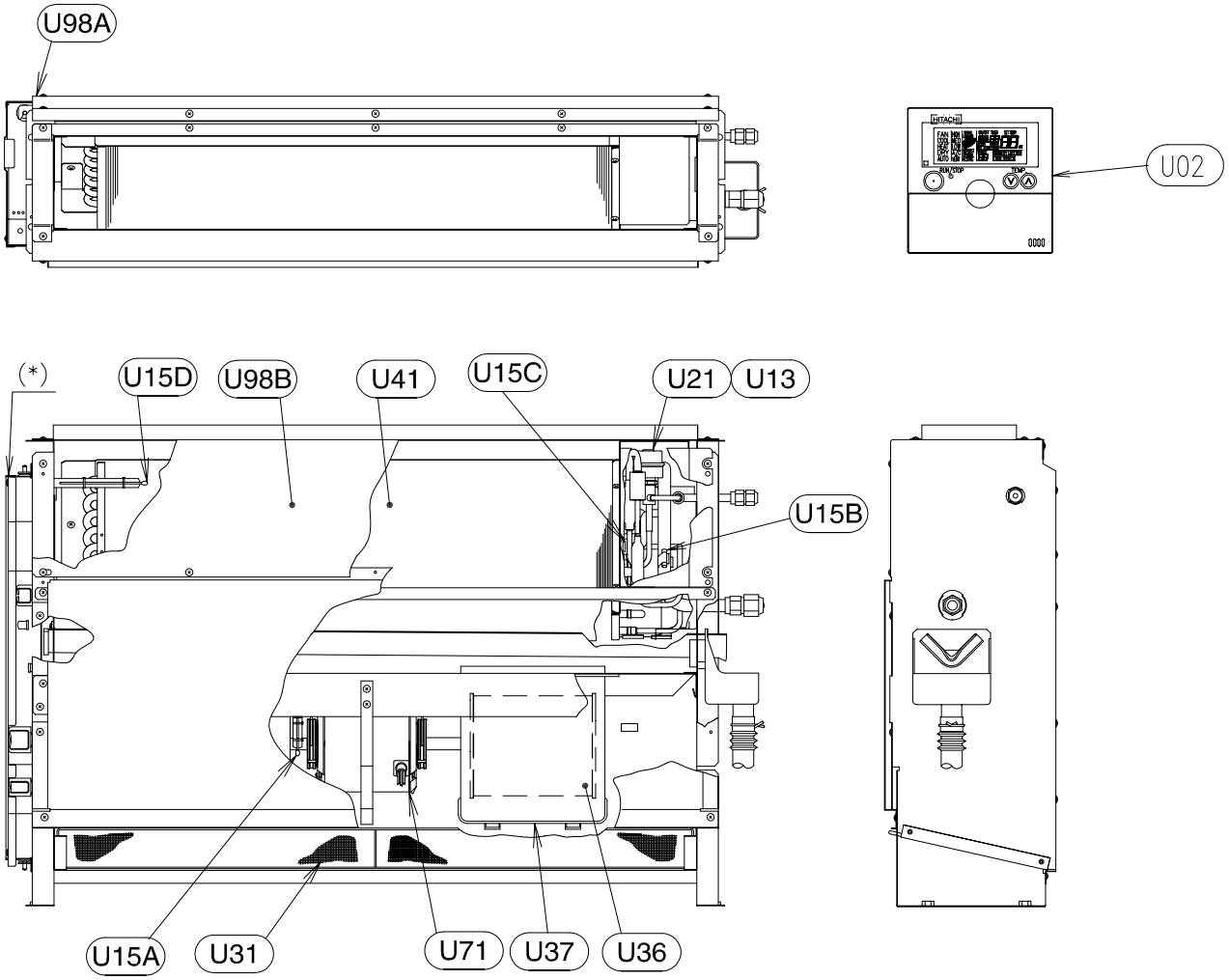

Electrical Parts

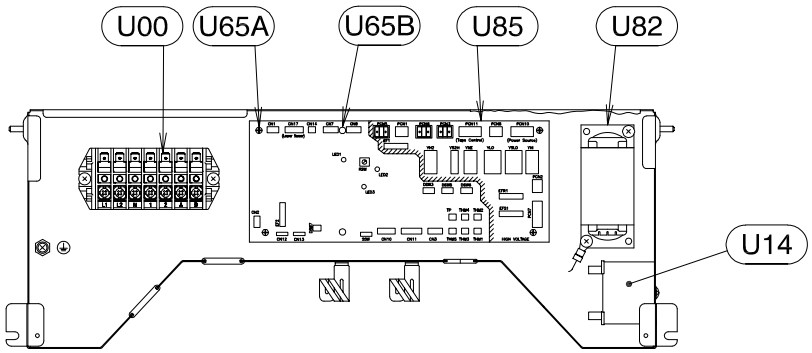

Drawing number: EPN808A-2B

Number	Part name	Remarks
U00	Printed circuit board terminals	—
U02	SW remote control	PC-P2HTE/PC-ART (optional)
U12	Cord expansion valve	—
U13	Cord expansion valve	—
U14	Capacitor	2 uF / 4 uF
U15A	Thermistor	THM1 thermistor for air inlet
U15B	Thermistor	THM5 thermistor for gas pipe
U15C	Thermistor	THM3 thermistor for liquid piping
U15D	Thermistor	THM2 thermistor for air outlet
U21	Expansion valve	—
U31	Air filter	—
U36	Runner	—
U37	Fan frame	—
U41	Heat exchanger	Assembly
U65A	Spacer	Attached to the PCB
U65B	Push spacer	Attached to the PCB
U71	Fan motor	—
U82	Transformer	—
U85	Printed circuit board	—
U98A	Rear cover	Assembly
U98B	Front cover	Assembly

9.17 KPI-(252-2002)E2E

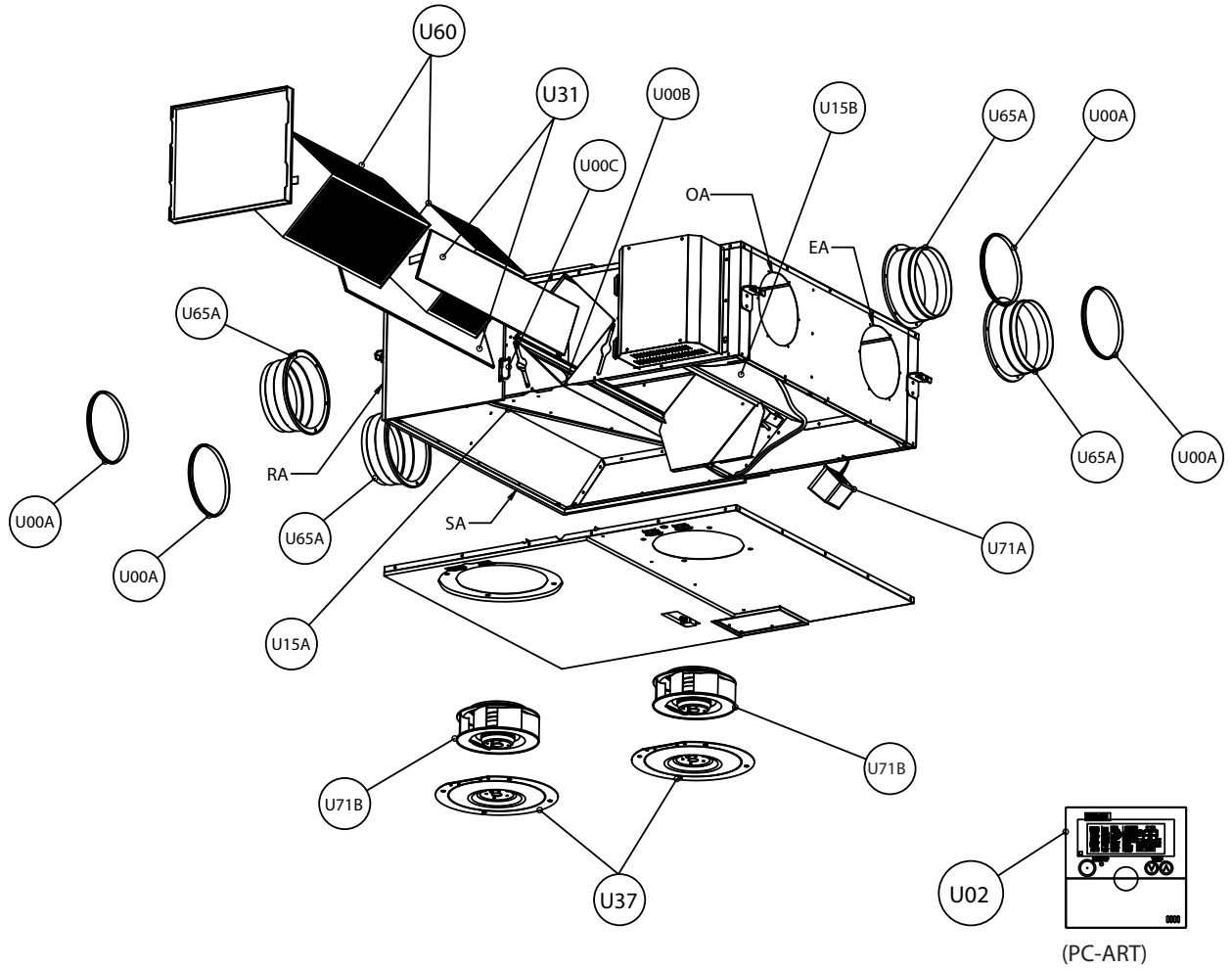

Location of electrical equipment in the electrical box

KPI-252E2E

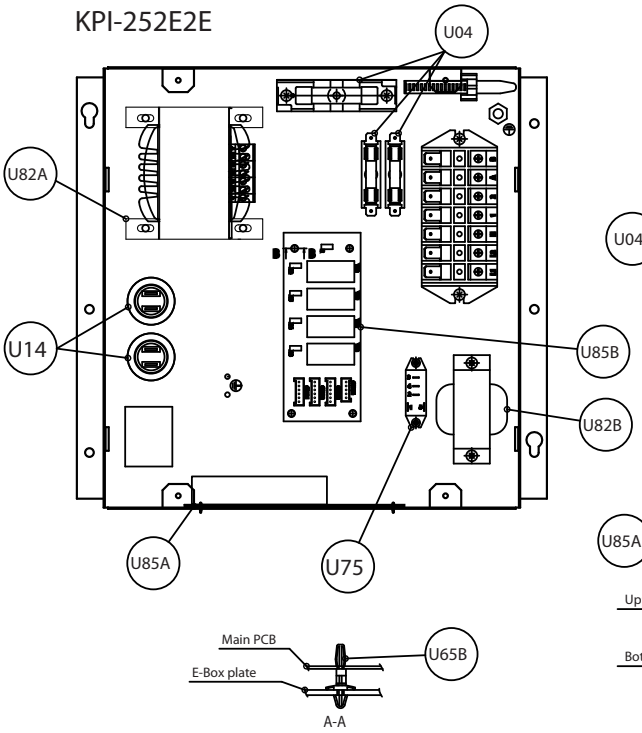

KPI-(502-2002)E2E

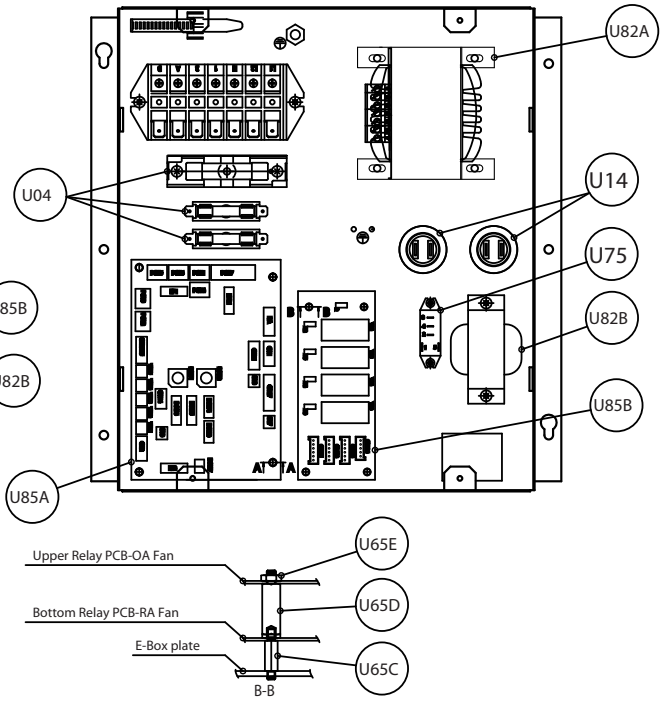

Number	Part name	Remarks
U00A	Duct Connection Sealing Strip	For Duct Connector
U00B	Exchanger Guide Gasket	—
U00C	Heat Exchanger Cover Clamp	—
U02	Remote Control	PC-ART
U04	Fuse	—
U14	Capacitor	—
U15A	Thermistor	Indoor Air (RA Location)
U15B	Thermistor	Outdoor Air (OA Location)
U31	Air Filter	Inlet & Outlet Air
U37	Fan Cover	For OA and RA Fan
U60	Heat Exchanger	Celluloid Heat Exchanger
U65A	Duct Connector	Plastic material
U65B	Spacer	Main PCB Holder
U65C	PCB Holder S/S	Relay PCB Holder
U65D	PCB Holder I/S	Relay PCB Holder
U65E	Plastic Nut	Relay PCB Holder
U71A	Motor	AC Motor for Damper
U71B	Fan Assy	Fan Runner + Motor
U75	Aux. Relay	For Damper Motor Control
U82A	Transformer	Main Transformer
U82B	Transformer	PCB Voltage Transformer
U85A	Printed Circuit Board	Main PCB
U85B	Printed Circuit Board	Relay PCB

9.18 KPI-(502-2002)H2E

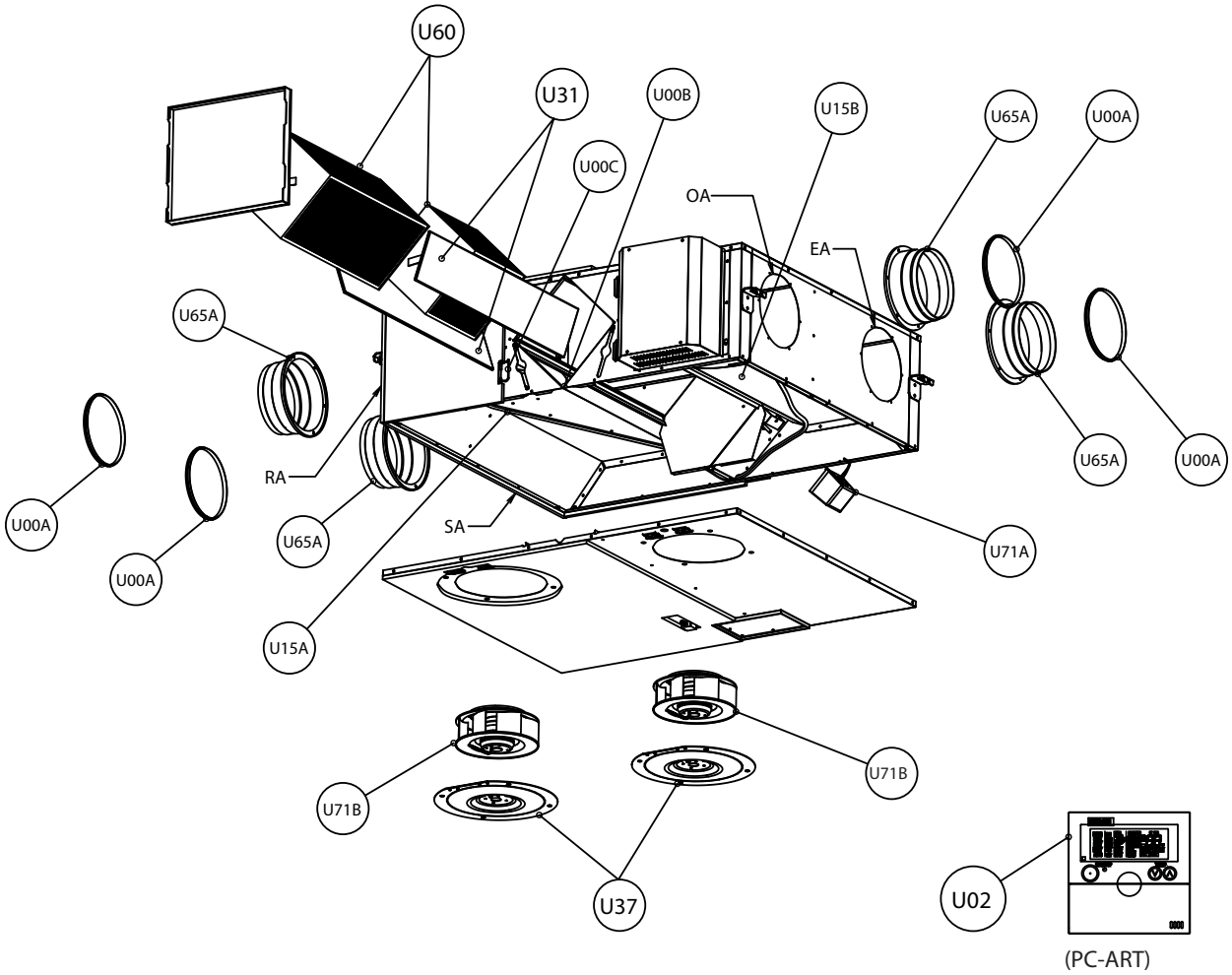

Location of electrical equipment in the electrical box

KPI-(502-2002)H2E

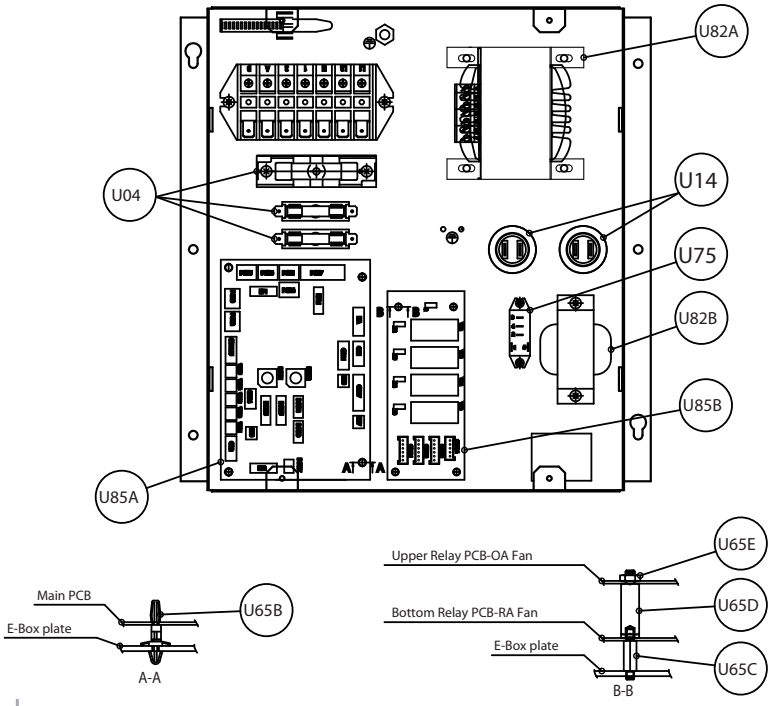

Number	Part name	Remarks
U00A	Duct Connection Sealing Strip	For Duct Connector
U00B	Exchanger Guide Gasket	—
U00C	Heat Exchanger Cover Clamp	—
U02	Remote Control	PC-ART
U04	Fuse	—
U14	Capacitor	—
U15A	Thermistor	Indoor Air (RA Location)
U15B	Thermistor	Outdoor Air (OA Location)
U31	Air Filter	Inlet & Outlet Air
U37	Fan Cover	For OA and RA Fan
U60	Heat Exchanger	Aluminium Heat Exchanger
U65A	Duct Connector	Plastic material
U65B	Spacer	Main PCB Holder
U65C	PCB Holder S/S	Relay PCB Holder
U65D	PCB Holder I/S	Relay PCB Holder
U65E	Plastic Nut	Relay PCB Holder
U71A	Motor	AC Motor for Damper
U71B	Fan Assy	Fan Runner + Motor
U75	Aux. Relay	For Damper Motor Control
U82A	Transformer	Main Transformer
U82B	Transformer	PCB Voltage Transformer
U85A	Printed Circuit Board	Main PCB
U85B	Printed Circuit Board	Relay PCB

9.19 KPI-3002H2E

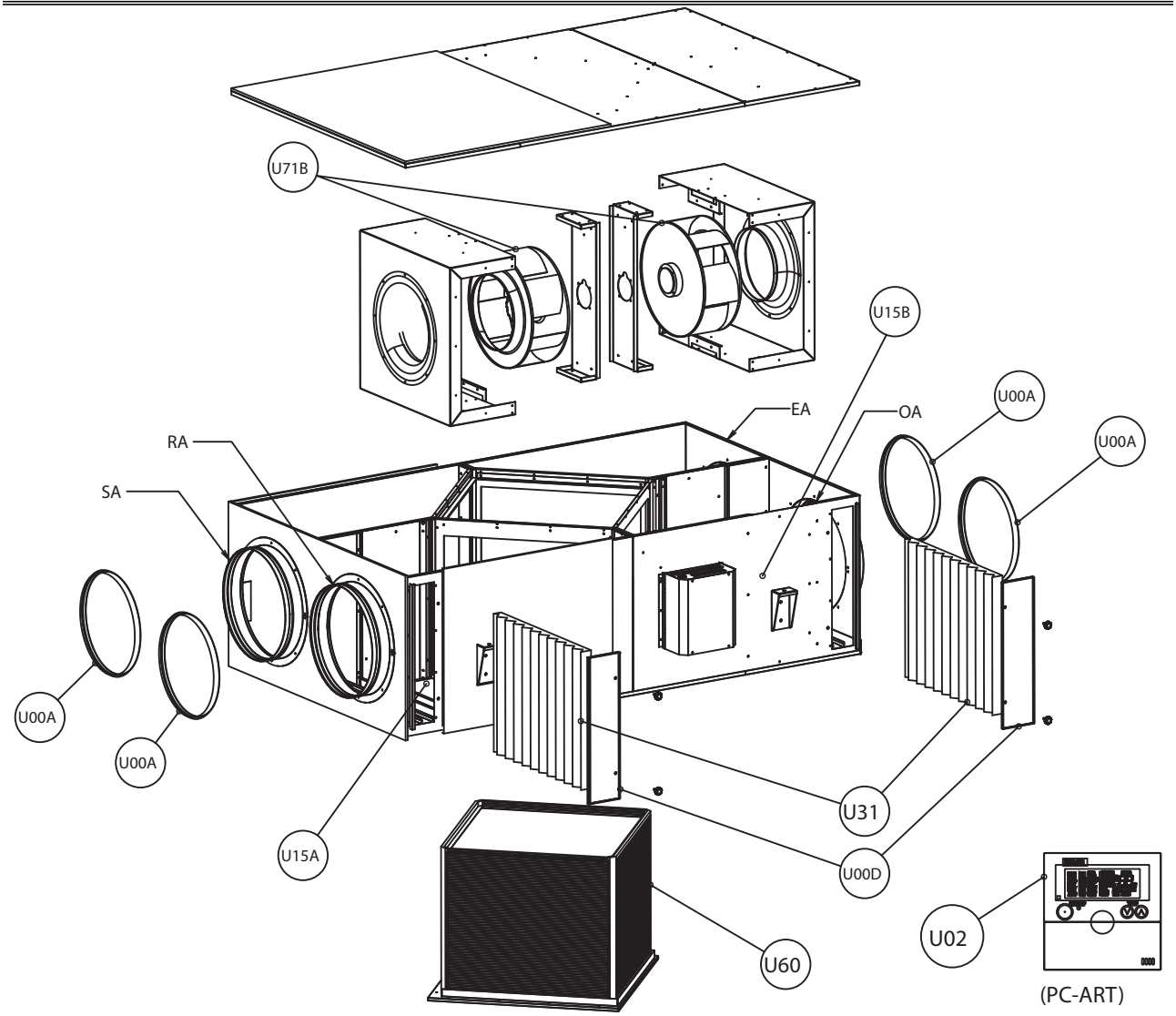

LOCATION OF ELECTRICAL EQUIPMENT IN THE ELECTRICAL BOX

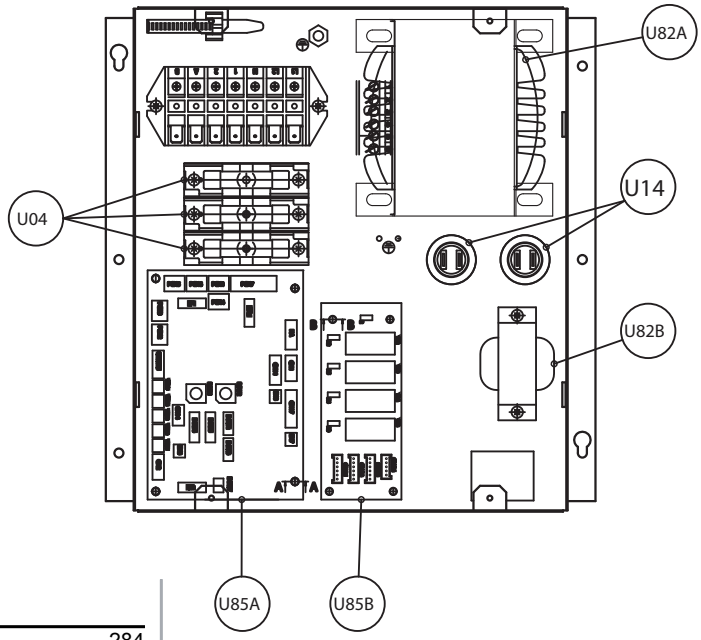

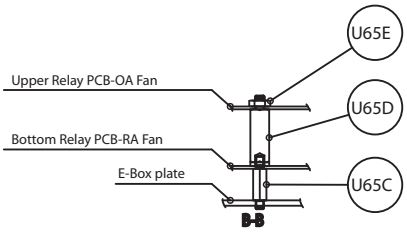

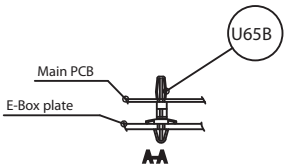

Number	Part name	Remarks
U00A	Duct Connection Sealing Strip	For Duct Connector
U00D	Filter Cover	With their screws
U02	Remote Control	PC-ART
U04	Fuse	—
U14	Capacitor	14 mF
U15A	Thermistor	Indoor Air (RA Location)
U15B	Thermistor	Outdoor Air (OA Location)
U31	Air Filter	Inlet & Outlet Air
U60	Heat Exchanger	Aluminium Heat Exchanger
U65B	Spacer	Main PCB Holder
U65C	PCB Holder S/S	Relay PCB Holder
U65D	PCB Holder I/S	Relay PCB Holder
U65E	Plastic Nut	Relay PCB Holder
U71B	Fan Assy	Fan Runner + Motor
U82A	Transformer	Main Transformer
U82B	Transformer	PCB Voltage Transformer
U85A	Printed Circuit Board	Main PCB
U85B	Printed Circuit Board	Relay PCB

9.20 DX-Interface

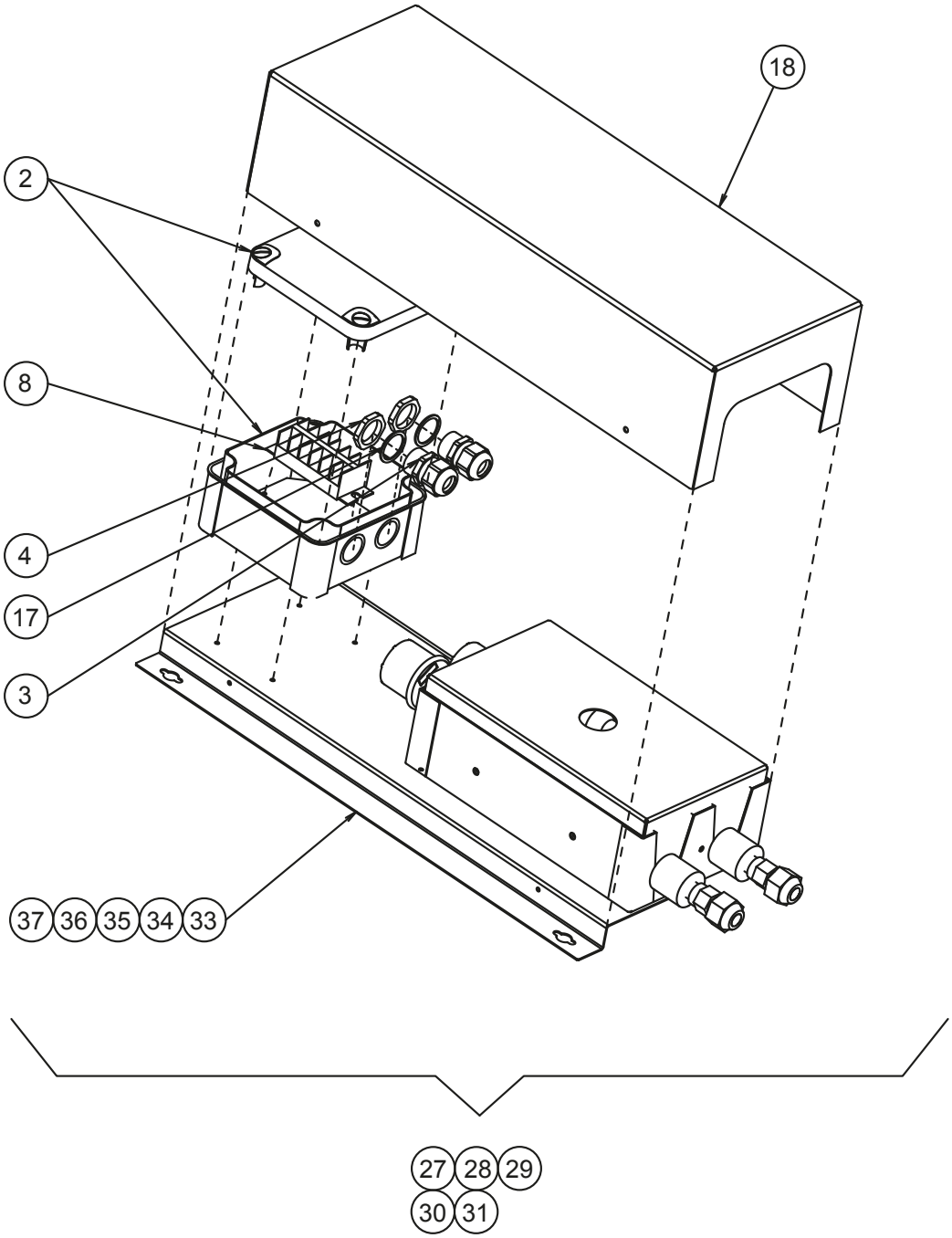

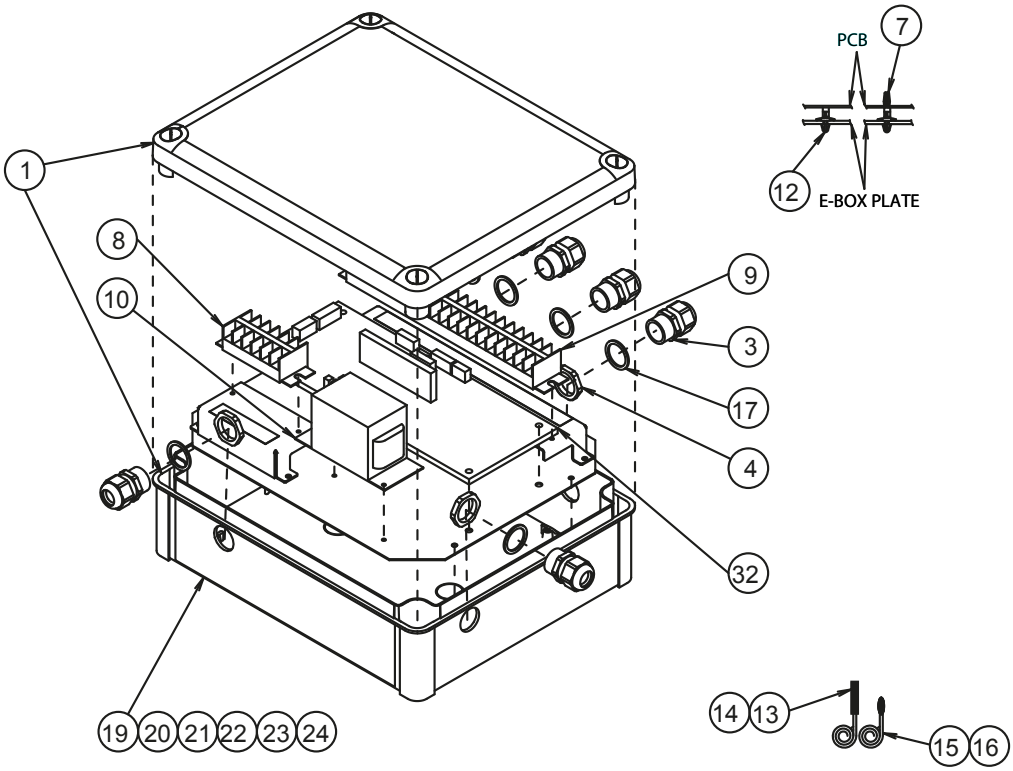
PCB
7
12
E-BOX PLATE
1
8
10
9
3
17
4
32
19
20
21
22
23
24
14
13
15
16

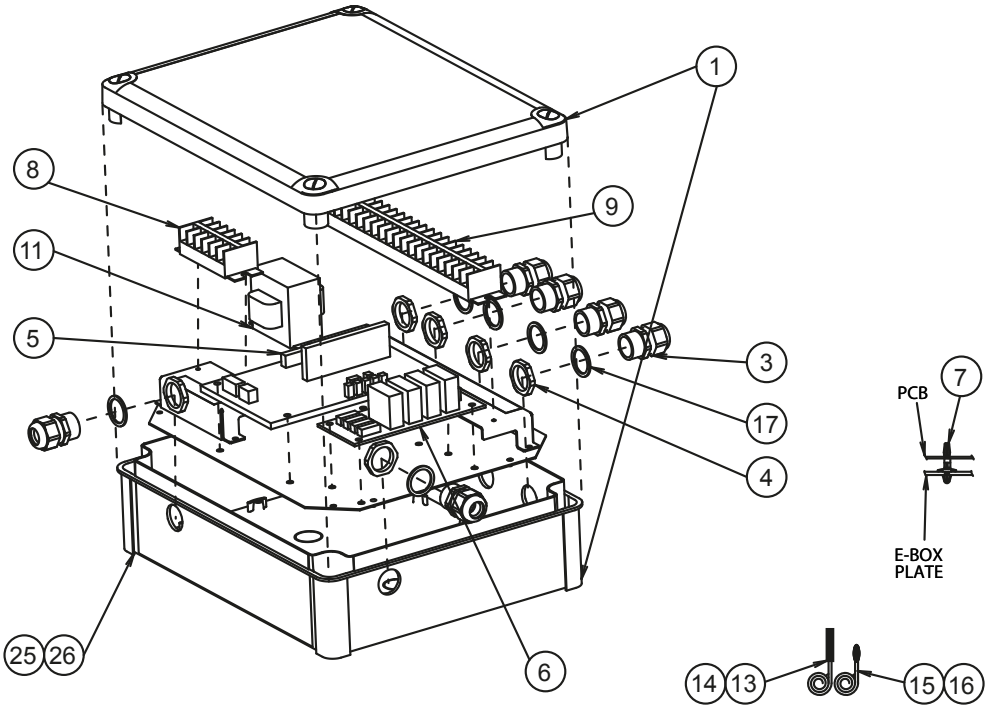
1
8
9
11
5
3
17
4
PCB
7
E-BOX
PLATE
25
26
6
14
13
15
16

Number	Part name	Remarks
1	E-BOX Expansion valve kit	-
2	E-BOX Expansion valve kit	-
3	Packing gland	-
4	Packing gland nut	-
5	Printed circuit board	PI065 ASSY
6	Relay PCB PI005	-
7	Spacer	For PCB Fixing
8	Terminal board	-
9	Terminal board	-
10	Transformer	-
11	Transformer	-
12	Push spacer	For PCB Fixing
13	Thermistor	THM3: For liquid Pipe; Black socket
14	Thermistor	THM5: For Gas Pipe; Yellow socket
15	Thermistor	THM1: For Inlet Air; Blue socket
16	Thermistor	THM2: For Outlet Air; Red socket
17	Packing gland washer	-
18	Cover	-
19	E-BOX Final assembly EXV-2.0E	Assembly (Components + Harness)
20	E-BOX Final assembly EXV-2.5E	Assembly (Components + Harness)
21	E-BOX Final assembly EXV-3.0E	Assembly (Components + Harness)
22	E-BOX Final assembly EXV-4.0E	Assembly (Components + Harness)
23	E-BOX Final assembly EXV-5.0E	Assembly (Components + Harness)
24	E-BOX Final assembly EXV-6.0E	Assembly (Components + Harness)
25	E-BOX Final assembly EXV-8.0E	Assembly (Components + Harness)
26	E-BOX Final assembly EXV-10.0E	Assembly (Components + Harness)
27	Expansion valve assembly 1 EXV-2.0E	Assembly
28	Expansion valve assembly 2 EXV-(2.5-4.0)E	Assembly
29	Expansion valve assembly 2 EXV-(5.0/6.0)E	Assembly
30	Expansion valve assembly 3 EXV-8.0E	Assembly
31	Expansion valve assembly 3 EXV-10.0E	Assembly
32	Printed circuit board	PI073 ASSY
33	Expansion valve kit assembly 1 EXV-2.0E	Assy (Valve stay + EXV Kit)
34	Expansion valve kit assembly 1 EXV-(2.5-4.0)E	Assy (Valve stay + EXV Kit)
35	Expansion valve kit assembly 1 EXV-(5.0/6.0)E	Assy (Valve stay + EXV Kit)
36	Expansion valve kit assembly 2 EXV-8.0E	Assy (Valve stay + EXV Kit)
37	Expansion valve kit assembly 2 EXV-10.0E	Assy (Valve stay + EXV Kit)

HITACHI
Inspire the Next

10. Servicing

Index

10.1 RCI - 4-way cassette (1.0-6.0)FSN3E 292
10.1.1 Removal of the long-lasting air filter 292
10.1.2 Removal of the air inlet grille 292
10.1.3 Removal of the electrical box cover 293
10.1.4 Removal of the optional air panel 293
10.1.5 Removal of the fan duct and motor 294
10.1.6 Bellmouth removal 295
10.1.7 Removal of the printed circuit board (PCB) 295
10.1.8 Removal of the drain pan 296
10.1.9 Removal of the drain mechanism 296
10.1.10 Removal of the float switch 297
10.1.11 Removal of the thermistors from the liquid and gas pipes 297
10.1.12 Removal of the electronic expansion valve coil 297
10.1.13 Removal of the automatic louver motor 299
10.2 RCIM - 4-way cassette (1.0-2.0)FSN2 (compact) 300
10.2.1 Removal of the air filter 300
10.2.2 Removal of the air inlet grille 300
10.2.3 Removal of the electrical box cover 300
10.2.4 Removal of the optional air panel 301
10.2.5 Removal of the electrical box 302
10.2.6 Removal of the fan duct and the fan 303
10.2.7 Removal of the printed circuit board (PCB) 303
10.2.8 Removal of the drain pan 304
10.2.9 Removal of the drain mechanism 304
10.2.10 Removal of the float switch 306
10.2.11 Removal of the thermistors from the liquid and gas pipes 306
10.2.12 Removal of the electronic expansion valve coil 307
10.2.13 Removal of the automatic louver motor 308
10.3 RCD - 2-way cassette 309
10.3.1 Removal of the long-lasting filter and the air inlet grille 309
10.3.2 Removal of the electrical box 309
10.3.3 Removal of the optional air panel 309
10.3.4 Removal of the fan duct and the fan 310
10.3.5 Removal of the printed circuit board (PCB) 311
10.3.6 Removal of the float switch 311
10.3.7 Removal of the drain mechanism 312
10.3.8 Removal of the drain pan 312
10.3.9 Removal of the thermistors from the liquid and gas pipes 313
10.3.10 Removal of the electronic expansion valve coil 313
10.3.11 Removal of the automatic louver motor 315
10.4 RPC - Ceiling 317
10.4.1 Removal of the air filter 317
10.4.2 Removal of the side panel 317
10.4.3 Removal of the air outlet grille 318
10.4.4 Removal of the fan motor 318

10.4.5 Removal of the fan shaft support ... 319
10.4.6 Removal of the coupling ... 320
10.4.7 Removal of the automatic louver motor ... 320
10.4.8 Removal of the thermistors from the liquid and gas pipes ... 320
10.4.9 Removal of the printed circuit board (PCB) ... 321
10.5 RPI-(0.8-6.0)FSN(2/3)E ... 323
10.5.1 Removal of the electrical box ... 323
10.5.2 Removal of the inlet and outlet air thermistors ... 324
10.5.3 Removal of the thermistors from the liquid and gas pipes ... 325
10.5.4 Removal of the fan parts ... 326
10.5.5 Removal of the drain mechanism ... 327
10.5.6 Removal of the float switch ... 328
10.5.7 Removal of the air filter ... 328
10.6 RPI-(8.0-10.0)FSN3E - Ducted indoor unit ... 329
10.6.1 Removal of the electrical box cover ... 329
10.6.2 Removal of electrical components ... 329
10.6.3 Removal of the inlet and outlet air thermistors ... 329
10.6.4 Removal of the thermistors from the liquid and gas pipes ... 331
10.6.5 Removal of the drain pan ... 331
10.6.6 Fan removal ... 332
10.6.7 Removal of the float switch ... 333
10.6.8 Removal of the air filter ... 333
10.7 RPIM - Ducted indoor unit ... 334
10.7.1 Removal of the electrical box ... 334
10.7.2 Removal of the inlet and outlet air thermistors ... 335
10.7.3 Removal of the thermistors from the liquid and gas pipes ... 336
10.7.4 Removal of the fan parts ... 337
10.7.5 Removal of the float switch ... 338
10.7.6 Removal of the air filter ... 339
10.8 RPK - FSN2M Wall mounted ... 340
10.8.1 Removal of the air filter ... 340
10.8.2 Removal of the front panel ... 341
10.8.3 Removal of the right cover (only RPK-(2.5-4.0)FSN2M) ... 344
10.8.4 Removal of the suction air grille (only RPK-(2.5-4.0)FSN2M) ... 344
10.8.5 Removal of the automatic louver motor ... 345
10.8.6 Remove the electrical box panel ... 346
10.8.7 Removal of the thermistors from the liquid and gas pipes and the inlet air and outlet air thermistors 347
10.8.8 Removal of the printed circuit board (PCB) ... 350
10.8.9 Removal of the heat exchanger ... 355
10.8.10 Removal of the AS motor ... 357
10.8.11 Removal of the drain pan ... 358
10.8.12 Removal of the fan motor ... 359
10.8.13 Removal of the electronic expansion valve ... 362
10.9 RPF(I)- (1.0-2.5) ... 364
10.9.1 Removal of the air inlet grille ... 364
10.9.2 Removal of the air filter ... 364
10.9.3 Removal of the air outlet grille ... 365
10.9.4 Removal of the front panel ... 365
10.9.5 Removal of the fan motor ... 365
10.9.6 Removal of the printed circuit board (PCB) ... 366
10.9.7 Removal of the thermistors from the liquid and gas piping ... 367

10.9.8 Removal of the fan motor 367
10.9.9 Removal of the printed circuit board (PCB) 367
10.9.10 Removal of the thermistors from the liquid and gas piping 367
10.10 KPI 368
10.10.1 System description 368
10.10.2 Structure and part names 368
10.10.3 Filter maintenance 368
10.10.4 Cleaning energy recovery ventilation unit elements 371
10.10.5 Energy recovery ventilation unit fan connectors and units 373
10.11 DX-Interface 375
10.11.1 Structure and part names 375
10.11.2 Removal of the electrical components 375

10.1 RCI - 4-way cassette (1.0-6.0)FSN3E

10.1.1 Removal of the long-lasting air filter

Nº	Part
1	Button
2	Air inlet grille

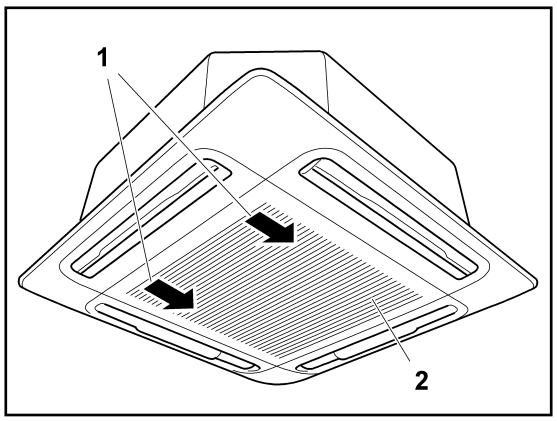

The long-lasting filter is located inside the air inlet grille.

Press the buttons in the direction indicated by the arrows and open the air inlet grille.

Remove the filter from the grille by holding onto the lower part of the grille and the filter and detaching the blocked part.

10.1.2 Removal of the air inlet grille

Nº	Part
1	Fan
2	Air inlet grille
3	Long-lasting filter
4	Chain
5	Hooks

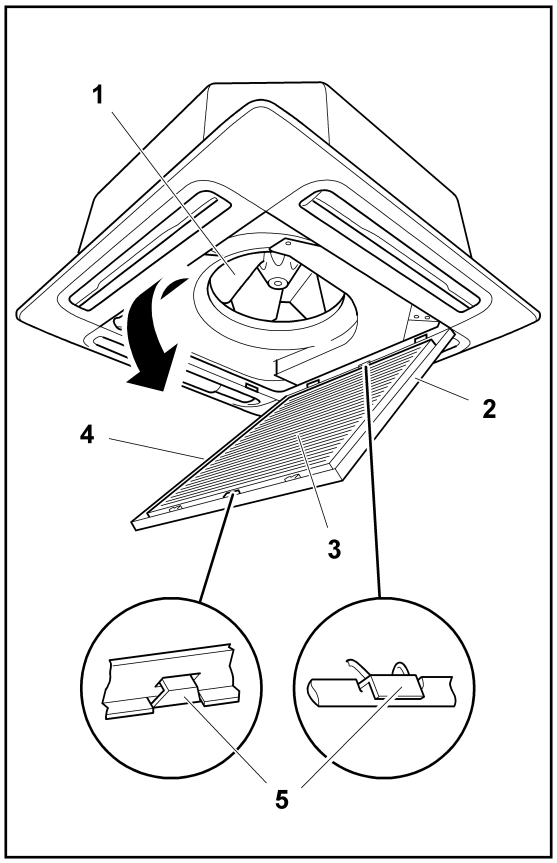

Lift the grille approximately 30° and release the securing chain.

Remove the grille by sliding it upwards and forwards.

NOTE

If the chain is released and the grille angle is at 90°, the grille cannot be removed.

10.1.3 Removal of the electrical box cover

Nº	Part
1	Screws
2	Electrical box cover

The electrical box can be removed by opening the air inlet grille.

Remove the two set screws from the electrical box cover and remove it.

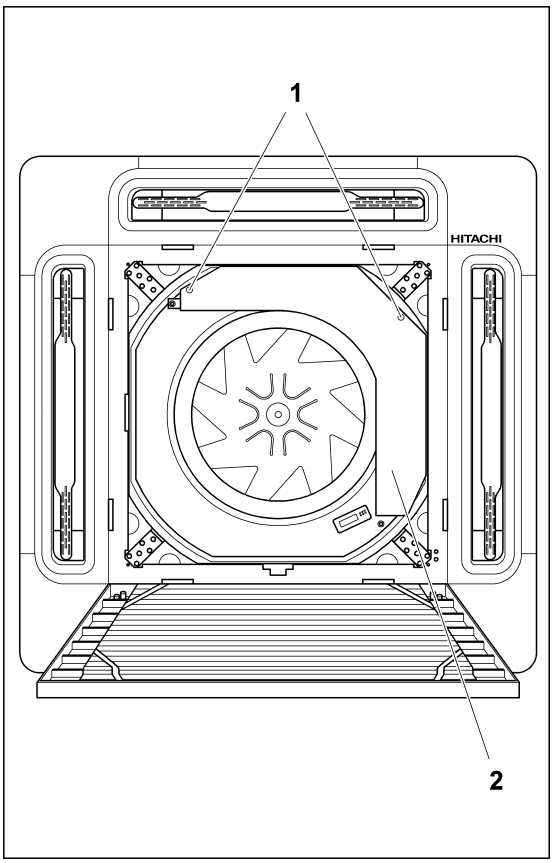

10.1.4 Removal of the optional air panel

Nº	Part
1	Main PCB
2	Connector CN17 for the louver motor

Remove the electrical box cover *Removal of the electrical box cover, see on page 293* and separate connector CN17 from the louver motor in the main indoor PCB.

Remove the air inlet grille from the optional air panel.

Remove the four panels from the corners as shown in the figure. Insert a screwdriver or a coin into the three grooves in the corner and release the attachment from each corner.

Remove the four screws from the optional air panel and secure to the drain pan hinge as shown in the figure. Then remove the optional air panel from the unit.

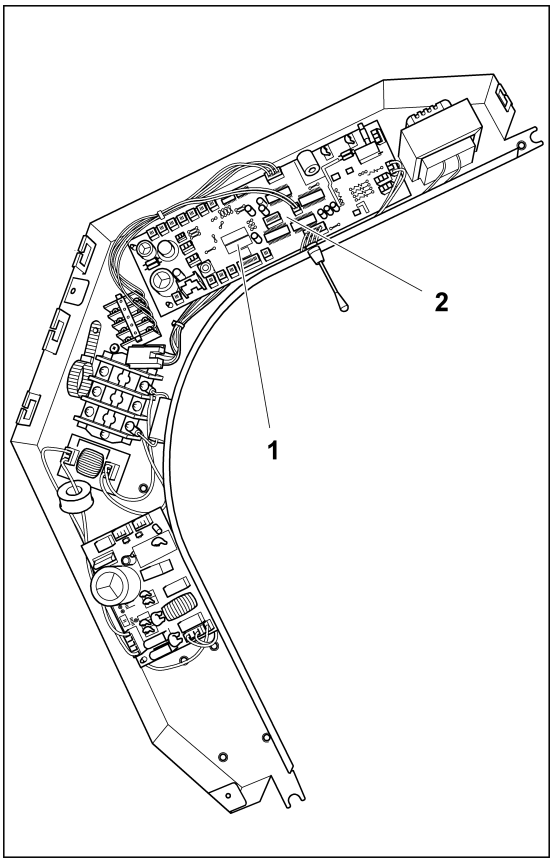

Nº	Part
1	Panel corner
2	3 grooves

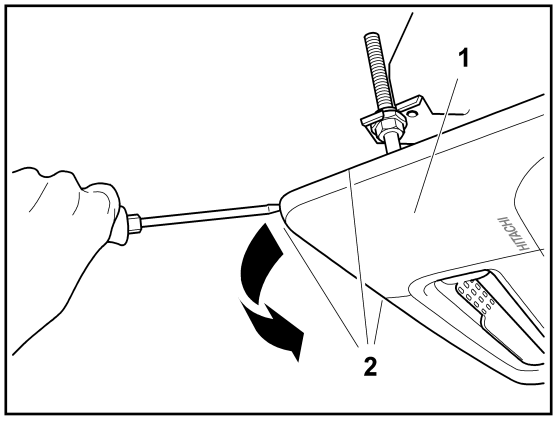

Nº	Part
1	Hinge
2	Hook

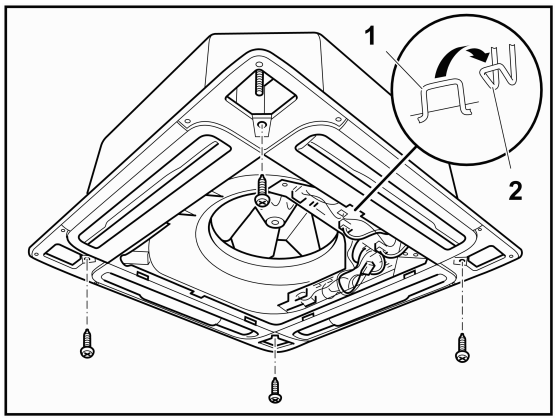

10.1.5 Removal of the fan duct and motor

Nº	Part
1	Plastic clamp
2	PCB electrical box set screws
3	PCB

Remove the air inlet grille *Removal of the air inlet grille, see on page 292*.

Remove the electrical box as follows:

1 Disconnect the thermistors (THM2), the drainage motor connector (PCN6) and the float switch connector (CN14) from the PCB.

2 Loosen the screw from the wire clamp and remove.

3 Remove the three set screws from the electrical box and remove carefully.

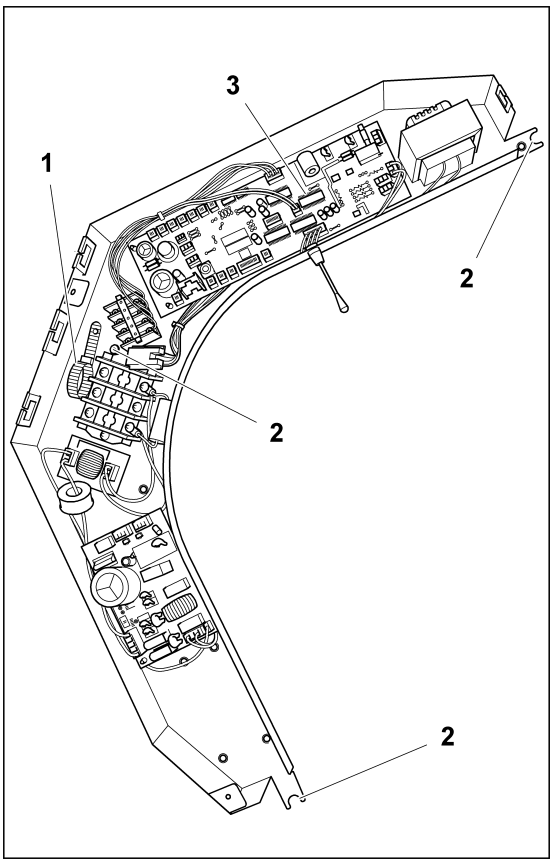

10.1.6 Bellmouth removal

Remove the three screws securing the fan duct to the drain pan and remove it.

Remove the duct by removing the nut and washer securing it.

Disconnect the earth wire from the fan motor (only for 4, 5 and 6 HP).

Remove the fan motor connector.

Remove the three nuts securing the fan motor and remove it.

NOTE

Torque value: maximum 8 Nm.

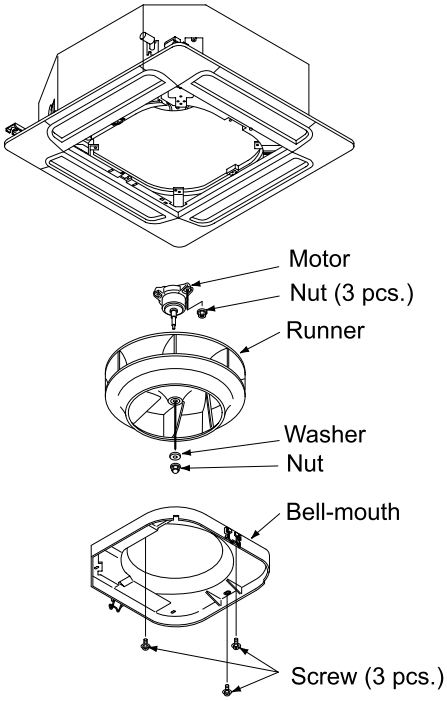

10.1.7 Removal of the printed circuit board (PCB)

Nº	Part
1	Power supply PCB
2	Control PCB

Remove the air inlet grille as indicated in chapter *Removal of the air inlet grille, see on page 292*.

Remove the electrical box cover as indicated in chapter *Removal of the electrical box cover, see on page 293*.

Separate all of the wiring connectors on the printed circuit boards (PCB).

Remove the PCB by pressing carefully on the support tabs with long-tipped pliers, as shown in the figure.

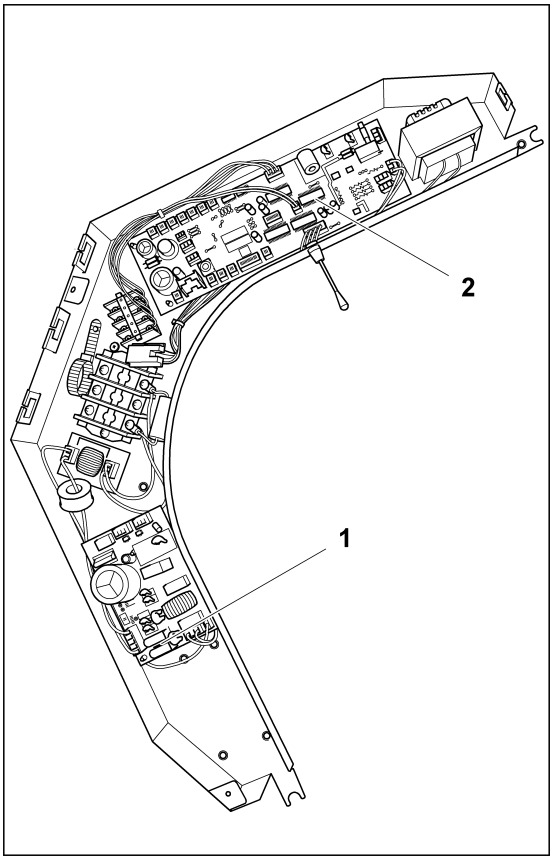

CAUTION

- ***Do not touch the electrical components of the PCB.***
- ***Do not apply force to the PCB, as this could damage it.***
- ***Pay special attention to the position of the connectors on the PCB. An incorrect position during installation may damage the PCB.***

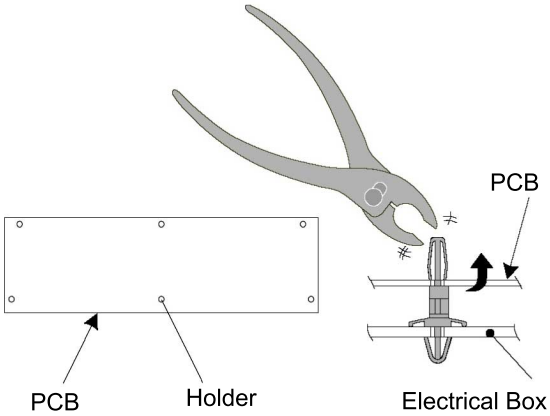

10.1.8 Removal of the drain pan

Remove the optional air panel *Removal of the optional air panel, see on page 293*.

Remove the electrical box cover *Removal of the electrical box cover, see on page 293*.

Separate the connectors from:

1 The air outlet thermistor.
2 The two pipe thermistors.
3 The electronic expansion valve.
4 The drainage pump.
5 The float switch.
6 The fan motor.

Remove the fan duct and motor as indicated in *Bellmouth removal, see on page 295*.

Check that the drainage hole is not blocked.

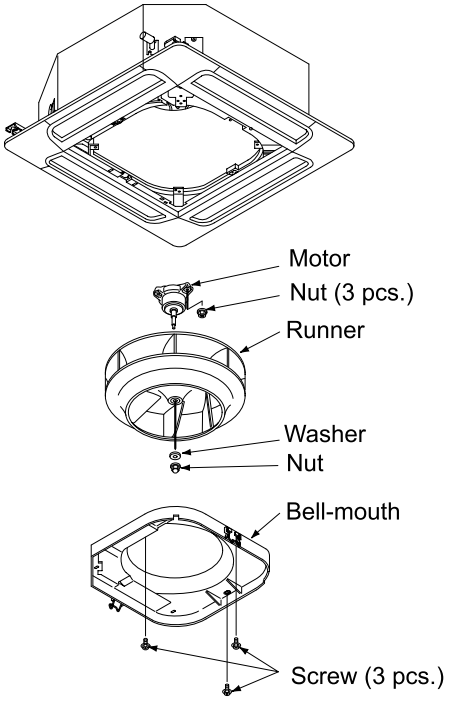

CAUTION

Do not use a knife or similar to remove the rubber plug, as this could damage it.

Remove the drain pan after removing the four set screws.

10.1.9 Removal of the drain mechanism

Nº	Part
1	Securing plate
2	Screws
3	Location of the pipe flange
4	Drain hose
5	Drain mechanism

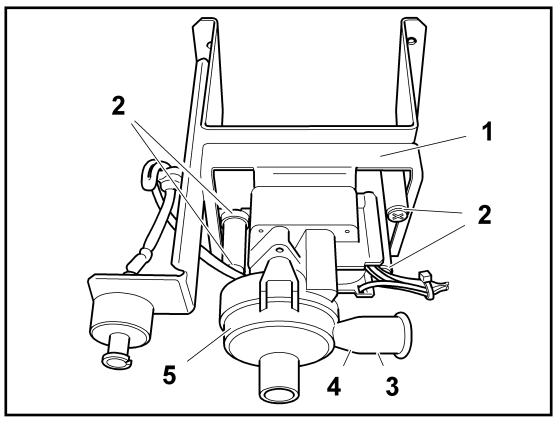

Remove the drain pan as indicated in chapter *Removal of the drain pan, see on page 296*.

Remove the flange from the hose and remove the drain hose.

Remove the earthing wiring screw.

Hold the drain mechanism and remove the three screws from the mechanism securing plate.

Remove the mechanism with the securing plate.

10.1.10 Removal of the float switch

Nº	Part
1	Securing plate screw
2	Securing base
3	Drain mechanism
4	Float switch
5	Nut

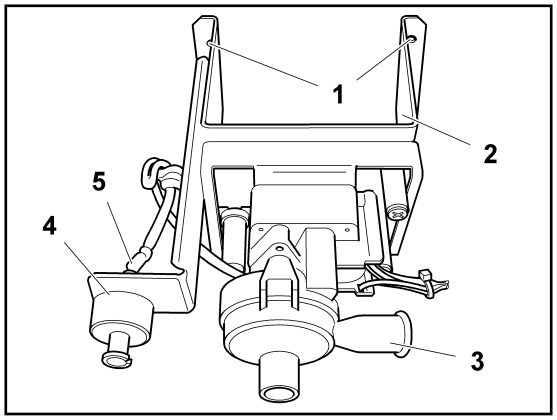

Remove the drain pan *Removal of the drain pan, see on page 296*.

Loosen the resin nut securing the float switch and remove it.

Remove the two screws securing the drain mechanism to remove the mechanism.

10.1.11 Removal of the thermistors from the liquid and gas pipes

Nº	Part
1	Thermistor securing plate
2	Thermistor

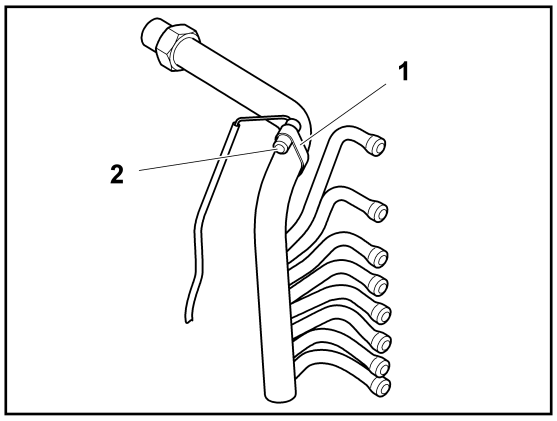

Remove the optional air panel in line with the instructions given in chapter *Removal of the optional air panel, see on page 293*.

Remove the fan duct in line with the instructions given in chapter *Bellmouth removal, see on page 295*.

Remove the drain pan as indicated in chapter *Removal of the drain pan, see on page 296*.

Remove the butyl sheet covering the thermistor. Remove the plate securing the thermistor to the pipe on which it is located and remove.

(Thermistor gas pipe)

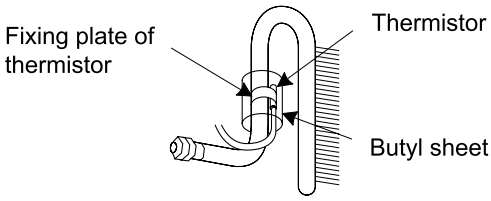

NOTE

The thermistor protection and securing system is the same on the gas and liquid pipe.

10.1.12 Removal of the electronic expansion valve coil

Nº	Part
1	Expansion valve

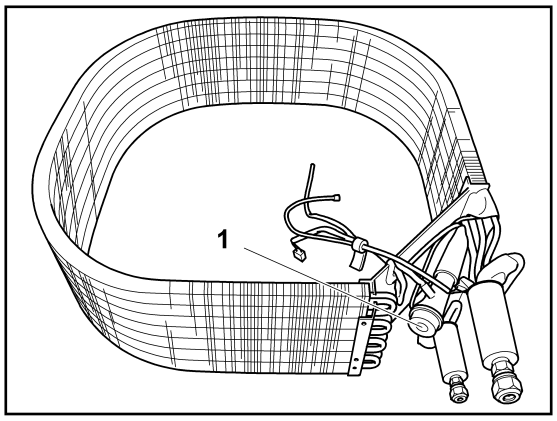

Remove the optional air panel in line with the instructions given in chapter *Removal of the optional air panel, see on page 293*.

Remove the fan duct in line with the instructions given in chapter *Bellmouth removal, see on page 295*.

Remove the drain pan as indicated in chapter *Removal of the drain pan, see on page 296*.

Remove the electronic expansion valve butyl sheet.

Secure the body of the valve using an appropriate wrench and loosen the nut with another wrench, turning it anti-clockwise.

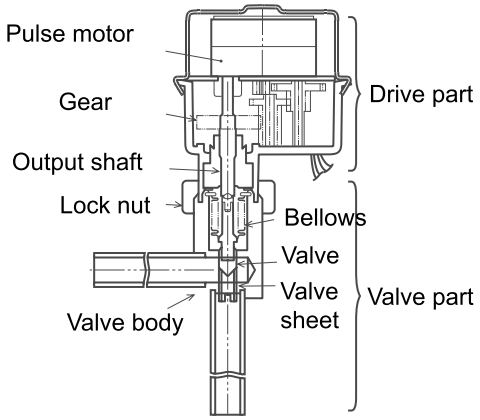

NOTE

Do not hold onto the motor when loosening the nut with a wrench. The base of the transmission part could become loose and break.

Loosen the nut several turns to release the transmission part from the bolt.

Adjustment of direction is not required.

(However, pay attention not to touch the pipes or the drain pan.)

Direction of drive part

Prepare the new transmission part (spare part) with the position of the transmission wheel (transmission bolt) already adjusted.

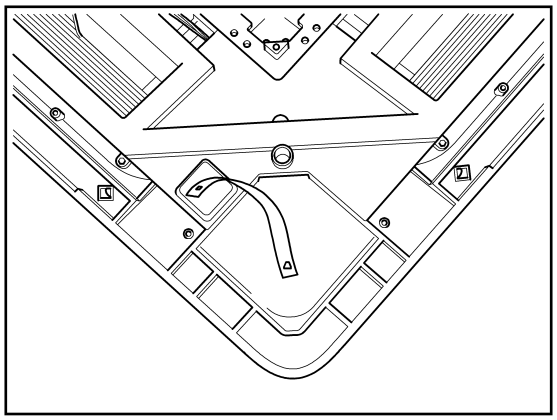

NOTE

- ***Pay attention to removal while replacing and prevent dust and foreign particles, etc. from entering it (the exposed part during removal is the mechanical part of the valve).***
- ***Do not damage the valve joint with tools.***

Fit the transmission part to the body of the valve, hold onto both and make sure their axes coincide before fitting the nut to the valve body bolt.

Tighten the nut by hand and apply the torque value: 12 Nm - 15 Nm.

NOTE

- ***Do not apply significant force to the motor, such as rotational torque or bending load, while holding it with your hand and tightening the nut.***
- ***The direction of the eccentric part of the motor is fitted in the same way as the expansion valve. Although the motor is facing away from the piping connections on the valve body, modification of this direction does not affect the valve open/close function. Therefore, it is not necessary to adjust the direction of the motor if the motor position moves in the direction of rotation after replacement, as shown in the figure.***
- ***However, check that the motor direction for the electronic expansion valve coil does not touch another pipe or the side plate of the electrical box.***

Once replaced, fit the electronic expansion valve in the reverse manner as indicated for the removal process.

Position the butyl sheet, attaching it correctly to the valve.

NOTE

Check that the cables do not touch the fan duct after installation is complete.

10.1.13 Removal of the automatic louver motor

Nº	Part
1	Automatic swing louvers

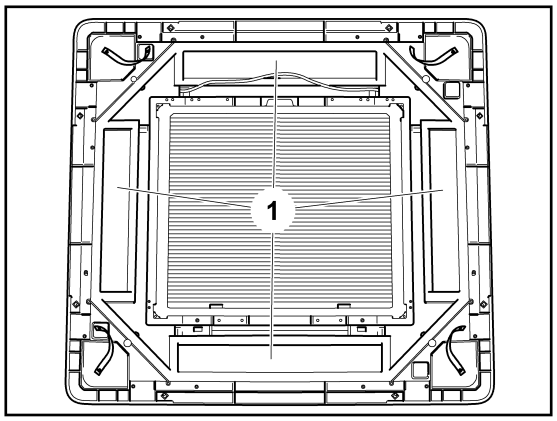

Remove the optional air panel in line with the instructions given in chapter *Removal of the optional air panel, see on page 293*.

Remove the motor cover after removing the screw securing the automatic louver motor cover.

Remove the automatic louver motor shaft and remove the motor with the securing plate.

Separate all connectors from the motor.

Nº	Part
1	Automatic louver motor
2	Connector
3	Louver shaft
4	Screw

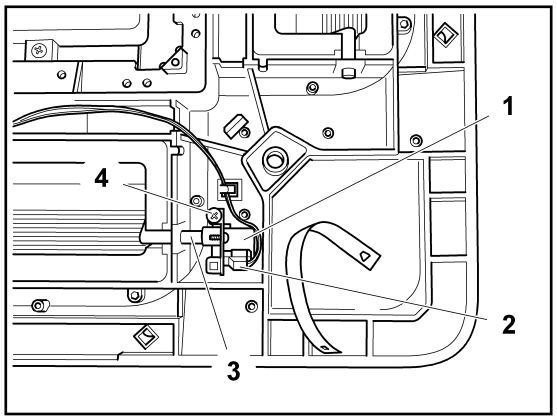

10.2 RCIM - 4-way cassette (1.0-2.0)FSN2 (compact)

10.2.1 Removal of the air filter

The long-lasting filter is located inside the air inlet grille.

Press the buttons in the direction indicated by the arrows and open the air inlet grille.

Remove the filter from the grille by holding onto the lower part of the grille and the filter and detaching the blocked part.

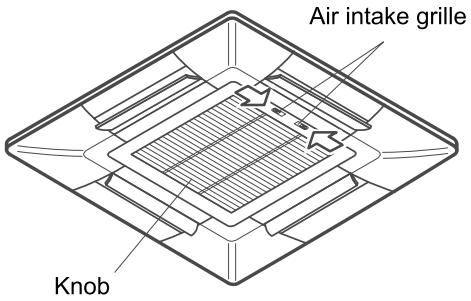

10.2.2 Removal of the air inlet grille

Lift the grille approximately 45° and release the securing chain.

Remove the grille by sliding it upwards and forwards.

NOTE

- ***If the chain is released and the grille angle is at 90°, the grille cannot be removed. Furthermore, the plastic supports could break.***
- ***If the louvers are to be moved, for example for cleaning purposes, select automatic swing mode to move the four louvers to the same position.***

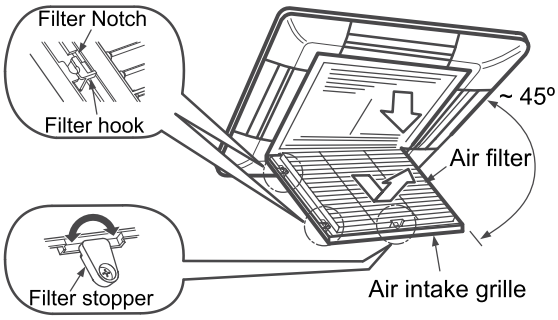

10.2.3 Removal of the electrical box cover

The electrical box can be removed by opening the air inlet grille.

Remove the three set screws from the electrical box cover and remove it.

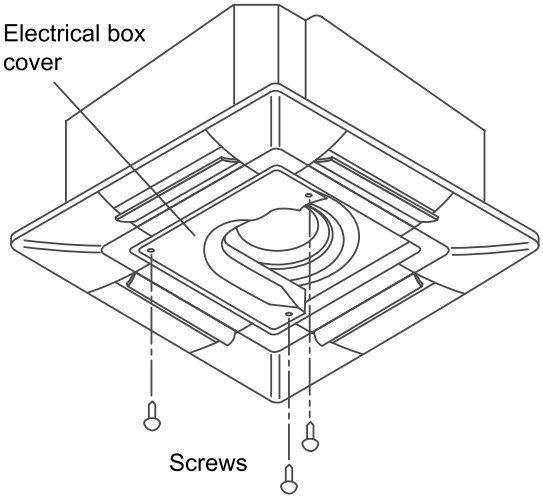

10.2.4 Removal of the optional air panel

Open the air inlet grille and separate the automatic louver connector.

Enlarged view

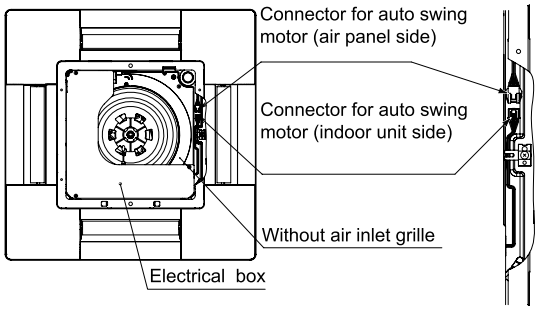

Remove the screw -a- from the side of the optional air panel and detach two hinges in the direction indicated by the arrow -b-. Then remove the four corner covers from the optional air panel by sliding them in the direction indicated by the arrow -c-.

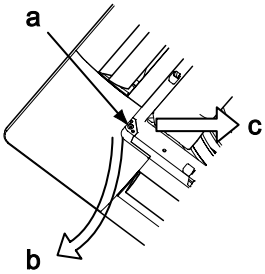

Loosen the two screws securing the air panel to the indoor unit. Then remove the other two screws (remove the screw located next to the PIPE SIDE indication and the one located on the opposite side).

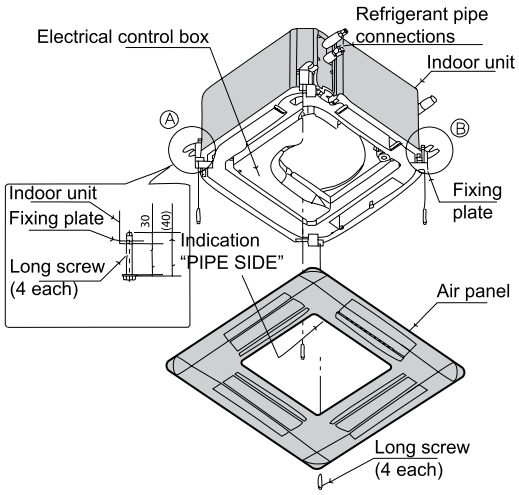

Detach the hinge from the two-position hooks, turning the panel in the direction indicated by the arrow and remove the optional air panel.

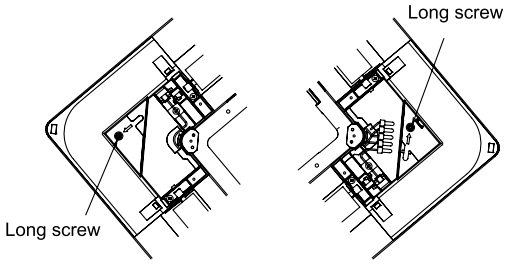

10.2.5 Removal of the electrical box

Nº	Part
1	Electrical box set screw
2	Drainage pump connector (PCN6)
3	Automatic louver connector (CN17)
4	Outlet thermistor (THM2)
5	Automatic louver electrical box set screw (THM2)
6	Fan motor connector (CN203)
7	Fan motor connector (CN201)

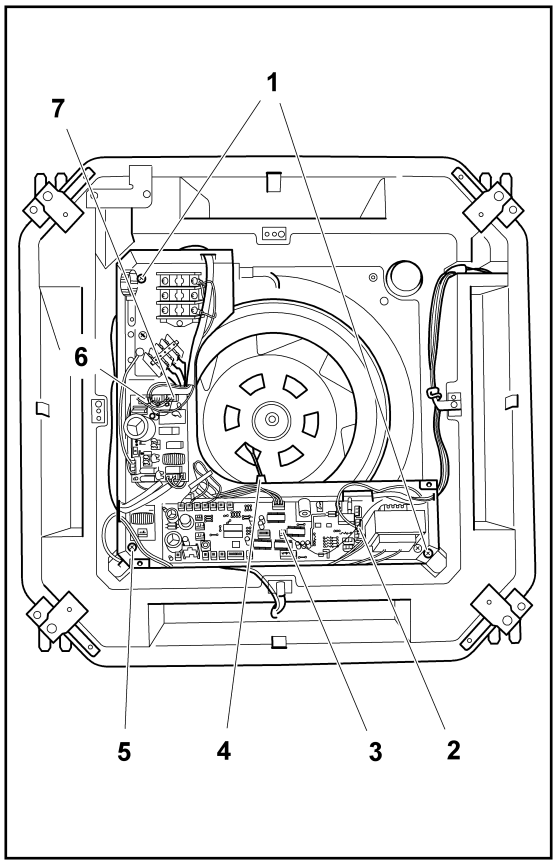

Remove the air inlet grille as indicated in chapters *Removal of the air filter, see on page 300* and *Removal of the air inlet grille, see on page 300*.

Remove the electrical box as follows:

1 Remove the electrical box cover.

2 Disconnect the thermistors (THM2), the drainage motor connector (PCN6), the float switch connector (CN14), the automatic louver connector (CN17) and the fan motor connector (PCN203, CN201) from the PCB.

3 Remove the three set screws from the electrical box and remove carefully.

10.2.6 Removal of the fan duct and the fan

Remove the three screws securing the fan duct to the drain pan and remove it.

Remove the duct by removing the nut and washer securing it.

Remove the fan motor connector.

Remove the three nuts securing the fan motor and remove it.

NOTE

Torque value: maximum 4 Nm.

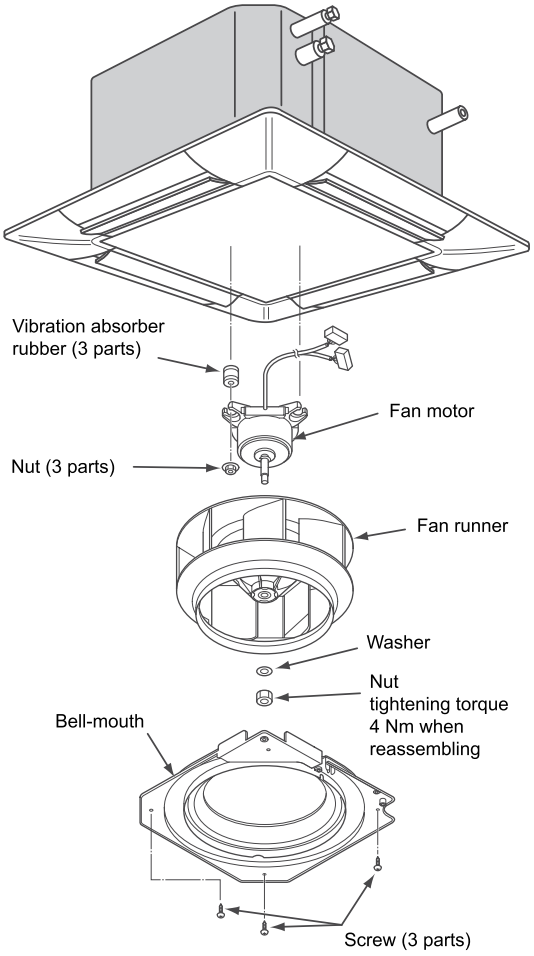

10.2.7 Removal of the printed circuit board (PCB)

Remove the air inlet grille as indicated in chapter *Removal of the air inlet grille, see on page 300*.

Remove the electrical box cover as indicated in chapter *Removal of the electrical box, see on page 302*.

Separate all of the wiring connectors on the printed circuit boards (PCB).

Carefully remove the securing supports from the control PCB (six), from the power supply PCB (four) and from the noise filter PCB (four) by pressing carefully on the support tabs with long-tipped pliers, as shown in the figure.

CAUTION

- ***Do not touch the electrical components of the PCB.***
- ***Do not apply force to the PCB, as this could damage it.***
- ***Pay special attention to the position of the connectors on the PCB. An incorrect position during installation may damage the PCB.***

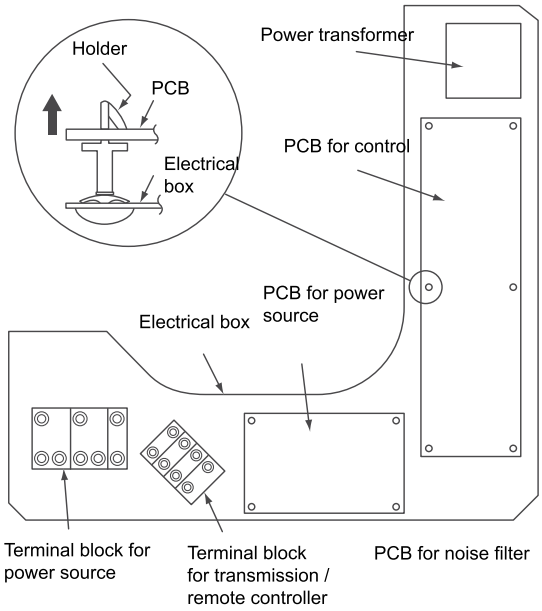

10.2.8 Removal of the drain pan

Remove the air panel in line with the instructions given in chapter *Removal of the optional air panel, see on page 301*.

Remove the electrical box cover as indicated in chapter *Removal of the electrical box, see on page 302*.

Separate the connectors from:

1 The air outlet thermistor.
2 The two pipe thermistors.
3 The electronic expansion valve.
4 The drainage pump.
5 The float switch.

Remove the fan duct and motor as indicated in chapter *Removal of the fan duct and the fan, see on page 303*.

Remove the two screws securing the cable support to the drain pan and remove the support.

Empty the pan of water by removing the rubber plug.

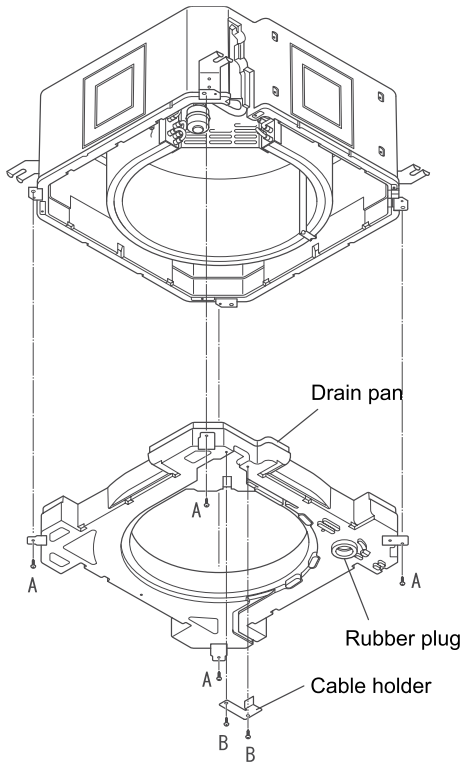

A : Drain pan setscrew
B : Screw for cable holde

CAUTION

- ***The plug is sealed with silicone but can be easily removed by pulling on the bottom of it.***
- ***Do not use a knife or similar to remove the rubber plug, as this could damage it.***
- ***Do not remove or damage the lower plug insulation when refitting.***

Check that the drainage hole is not blocked.

Remove the drain pan after removing the four set screws, pulling it carefully downwards.

CAUTION

- ***Do not use a sharp tool, such as a screwdriver, to fit the rubber plug, as this could damage it.***
- ***After fitting the plug, there must be a space of 2 - 3 mm between it and the drain pan.***

10.2.9 Removal of the drain mechanism

Remove the drain pan as indicated in chapter *Removal of the drain pan, see on page 304*.

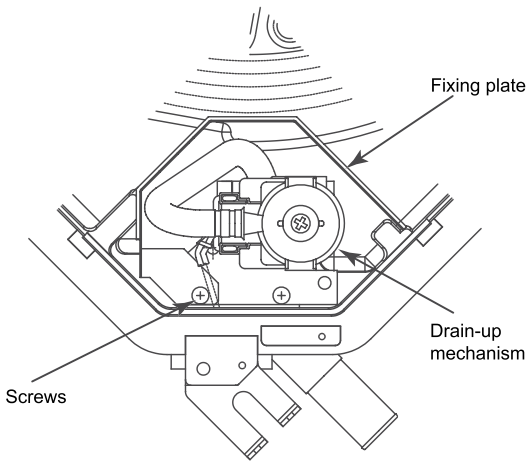

Remove the flange from the hose and remove the drain hose.

Remove the earthing wiring screw.

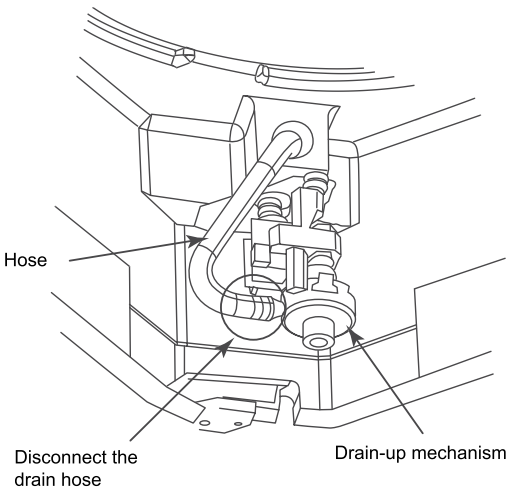

Hold the drain mechanism and remove the screw from the mechanism securing plate.

Remove the mechanism with the securing plate.

NOTE

When installing, fit the drain hose as far as possible in the pump.

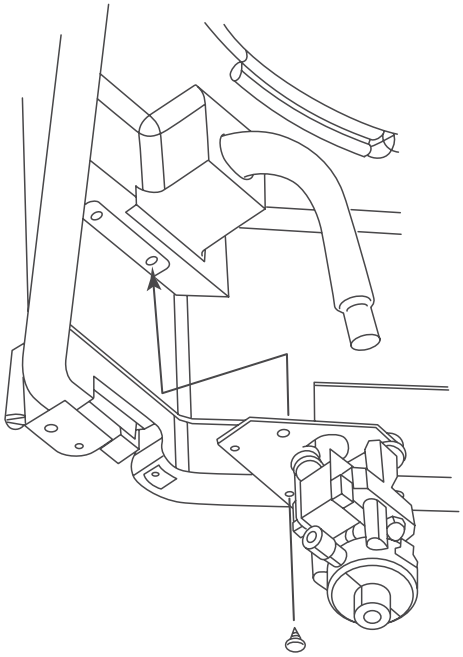

10.2.10 Removal of the float switch

Remove the drain pan as indicated in chapter *Removal of the drain pan, see on page 304*.

Remove the screw securing switch securing plate to the drain pan and remove it.

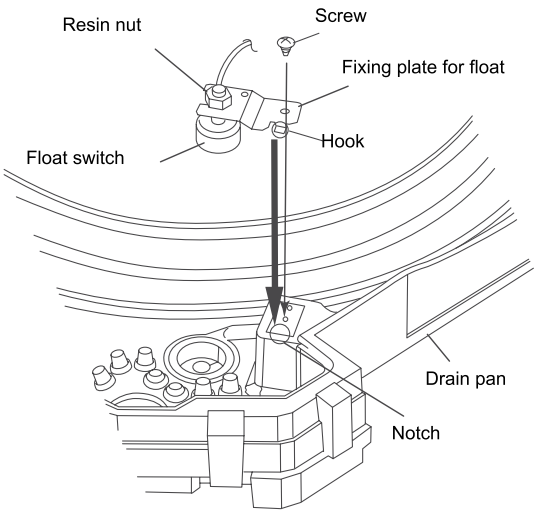

NOTE

The float switch is located at the rear of the drain pan.

Loosen the resin nut securing the float switch and remove it.

Remove the two screws securing the drain mechanism to remove the mechanism.

NOTE

- ***When refitting, make sure the hook is fitted into the groove in the drain pan and screw into place.***
- ***The torque value of the resin nut is 0.3 - 0.4 Nm. If the torque value is higher, the nut will be damaged.***

10.2.11 Removal of the thermistors from the liquid and gas pipes

Remove the optional air panel in line with the instructions given in chapter *Removal of the optional air panel, see on page 301*.

Remove the fan duct in line with the instructions given in chapter *Removal of the fan duct and the fan, see on page 303*.

Remove the drain pan as indicated in chapter *Removal of the drain pan, see on page 304*.

Remove the evaporator partition plate securing the heat exchanger by removing the five screws.

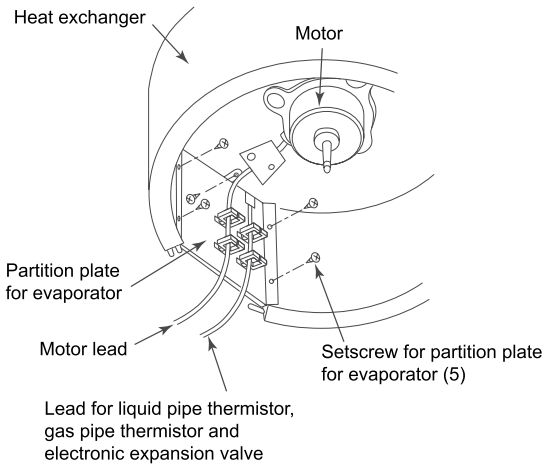

NOTE

- ***The thermistor protection and securing system is the same on the gas and liquid pipe.***
- ***The thermistors are secured with brackets.***

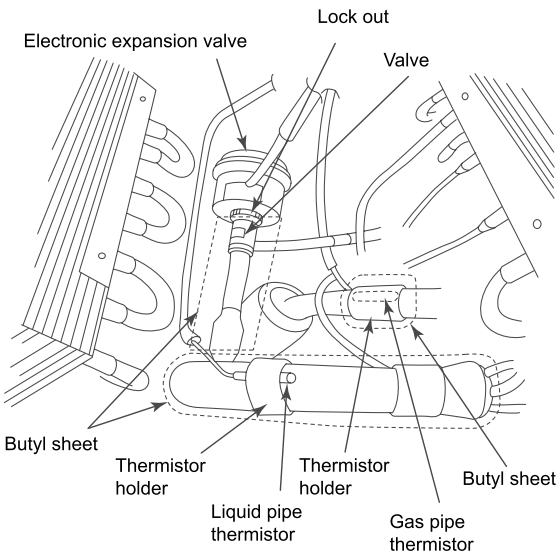

10.2.12 Removal of the electronic expansion valve coil

Remove the optional air panel in line with the instructions given in chapter *Removal of the optional air panel, see on page 301*.

Remove the fan duct and the fan as indicated in chapter *Removal of the fan duct and the fan, see on page 303*.

Remove the drain pan as indicated in chapter *Removal of the drain pan, see on page 304*.

Remove the electronic expansion valve butyl sheet.

Secure the body of the valve using an appropriate wrench and loosen the nut with another wrench, turning it anti-clockwise.

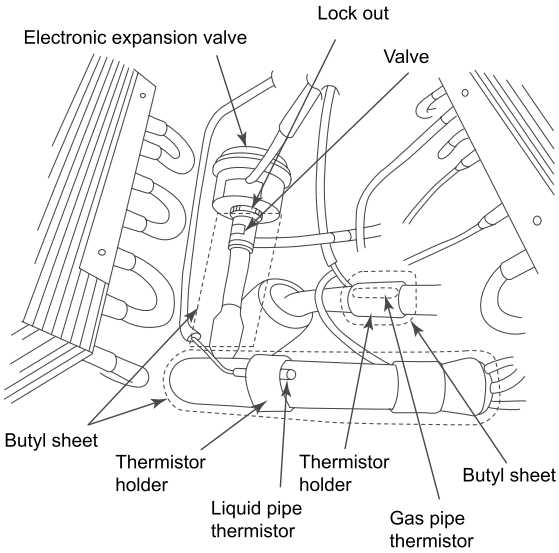

NOTE

Do not hold onto the motor when loosening the nut with a wrench. The base of the transmission part could become loose and break.

Loosen the nut several turns to release the transmission part from the bolt.

Prepare the new transmission part (spare part) with the position of the transmission wheel (transmission bolt) already adjusted.

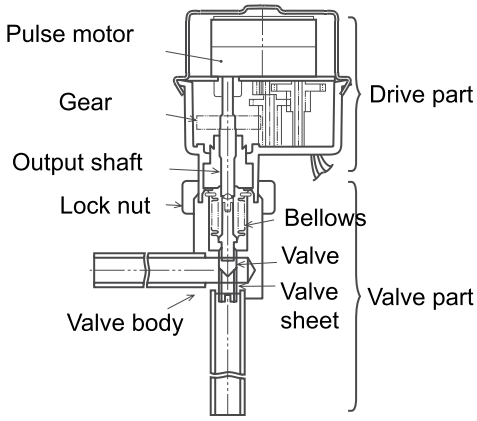

NOTE

- ***Pay attention to removal while replacing and prevent dust and foreign particles, etc. from entering it (the exposed part during removal is the mechanical part of the valve).***
- ***Do not damage the valve joint with tools.***

Fit the transmission part to the body of the valve, hold onto both and make sure their axes coincide before fitting the nut to the valve body bolt.

Tighten the nut by hand and apply the torque value: 12 Nm - 15 Nm.

Adjustment of direction is not required.

(However, pay attention not to touch the pipes or the drain pan.)

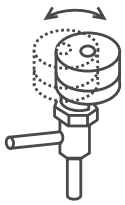

Direction of drive part

NOTE

- ***Do not apply significant force to the motor, such as rotational torque or bending load, while holding it with your hand and tightening the nut.***
- ***The direction of the eccentric part of the motor is fitted in the same way as the expansion valve. Although the motor is facing away from the piping connections on the valve body, modification of this direction does not affect the valve open/close function. Therefore, it is not necessary to adjust the direction of the motor if the motor position moves in the direction of rotation after replacement, as shown in the figure.***
- ***However, check that the motor direction for the electronic expansion valve coil does not touch another pipe or the side plate of the electrical box.***

Once replaced, fit the electronic expansion valve in the reverse manner as indicated for the removal process.

Position the butyl sheet, attaching it correctly to the valve.

NOTE

Check that the cables do not touch the fan duct after installation is complete.

10.2.13 Removal of the automatic louver motor

Remove the optional air panel in line with the instructions given in chapter *Removal of the optional air panel, see on page 301*.

Separate the connector from the AS motor.

Remove the screw securing the louver and one set screw on the AS motor.

Remove the AS motor, pulling carefully with the louver and then sliding it out.

After removing the AS motor, refit the louver adjusting the stop position as indicated in the figure: cut D on the shaft of the AS motor must coincide with cut D on the louver.

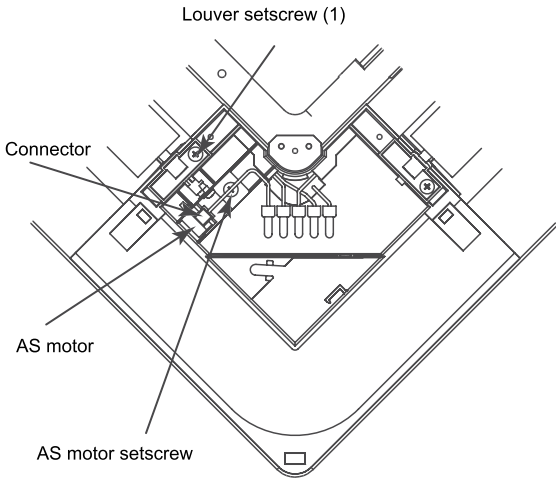

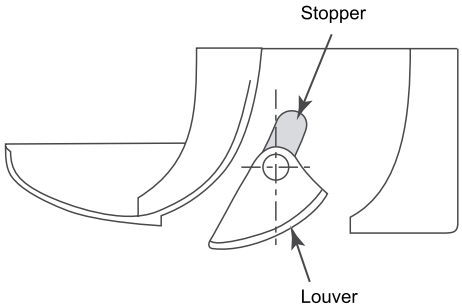

10.3 RCD - 2-way cassette

10.3.1 Removal of the long-lasting filter and the air inlet grille

NOTE

The long-lasting filter is located inside the air inlet grille.

Open the air inlet grille by pressing the button, as indicated in the figure.

Remove the filter from the grille by holding onto the lower part of the grille and the filter and detaching the blocked part.

The grille can be removed by lifting and pulling it forwards from the chain to release it.

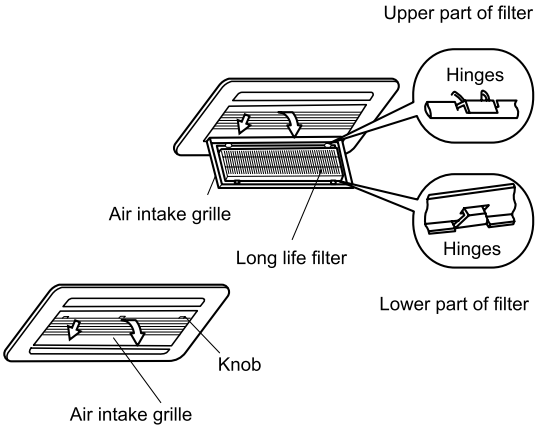

10.3.2 Removal of the electrical box

Open the air inlet grille.

Loosen the screw securing the electrical box panel and remove it.

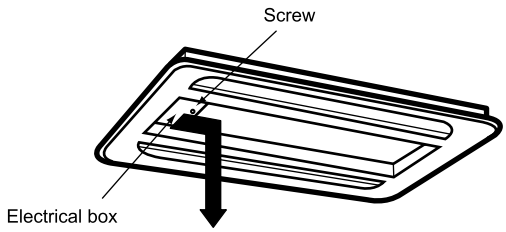

10.3.3 Removal of the optional air panel

Open the air inlet grille.

Remove the electrical box panel.

Remove the connector (CN17) of the automatic louver on the indoor unit PCB.

Remove the air inlet grille from the optional air panel.

Remove the four screws securing the optional air panel.

Remove the panel after detaching the hinge from the two positions next to the drain pan.

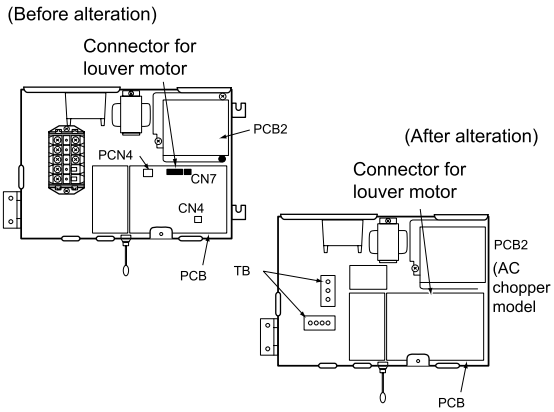

10

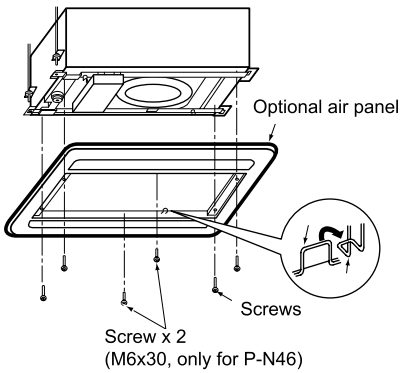

10.3.4 Removal of the fan duct and the fan

Remove the optional air panel in line with the instructions given in chapter *Removal of the optional air panel, see on page 309*.

Separate the connectors from each cable in the electrical box.

Remove the two set screws from the electrical box and turn around 90° downwards (the electrical box is attached by the hinge).

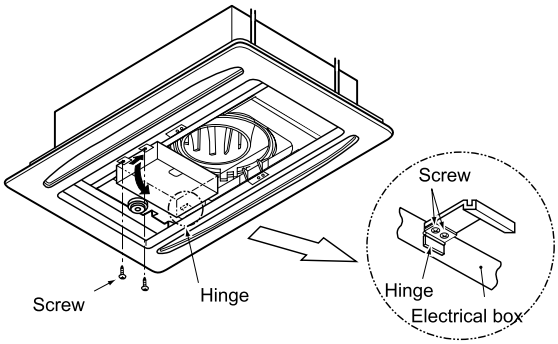

NOTE

Do not remove the set screw from the hinge.

4 and 5 HP models: remove the screw from the securing plate and remove.

Remove the two screws securing the bellmouth to the drain pan securing plates and remove it.

RCD-2.0 to 3.0FSN
(1 bell-mouth)

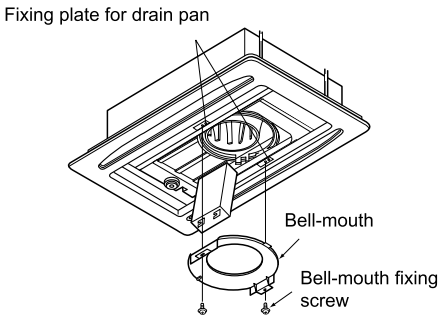

RCD-4.0 and 5.0FSN
(2 bell-mouth)

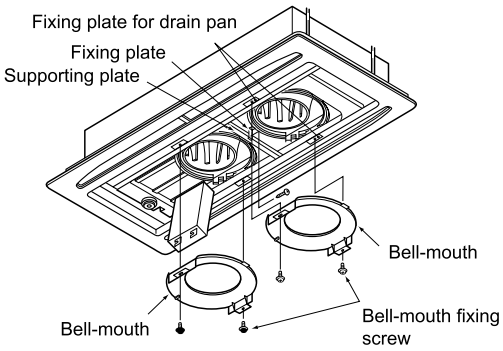

Remove the cap nut and the washer securing the fan duct and remove it.

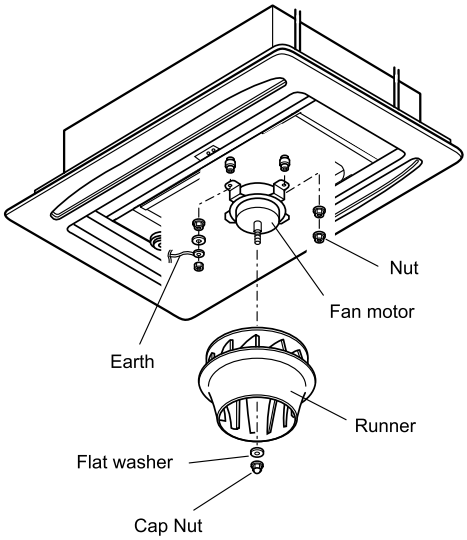

NOTE

- ***Torque value: maximum 8 Nm.***
- ***RCD-(1.5-3.0)FSN2: one duct and one fan motor.***
- ***RCD-(4.0-5.0)FSN2: two ducts and two fan motors.***

Separate the connector from the fan motor earth cable.

Remove the four nuts securing the fan motor and remove it.

10.3.5 Removal of the printed circuit board (PCB)

Remove the air inlet grille as indicated in chapter *Removal of the optional air panel, see on page 309*.

Remove the electrical box as indicated in chapter *Removal of the electrical box, see on page 309*.

Remove the printed circuit board (PCB) by pressing carefully on the support tabs with long-tipped pliers, as shown in the figure.

Remove the three set screws from the AC chopper.

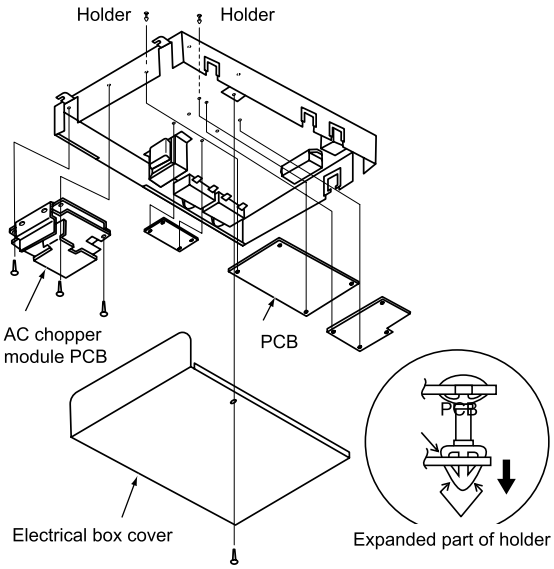

CAUTION

- ***Do not touch the electrical components of the PCB.***
- ***Do not apply force to the PCB, as this could damage it.***
- ***The sealed earthing cable and the transformer are secured by a screw. When installing, be particularly careful not to overtighten the set screw.***

10.3.6 Removal of the float switch

Remove the air inlet grille as indicated in chapter *Removal of the long-lasting filter and the air inlet grille, see on page 309*.

Remove the bellmouth in line with the instructions given in chapter *Removal of the fan duct and the fan, see on page 310*.

Remove the two screws securing the panel located next to the service opening, close to the pipes inside the unit and remove it.

Separate the float switch connector and remove the two screws securing the plate attaching the switch to the drain mechanism securing plate.

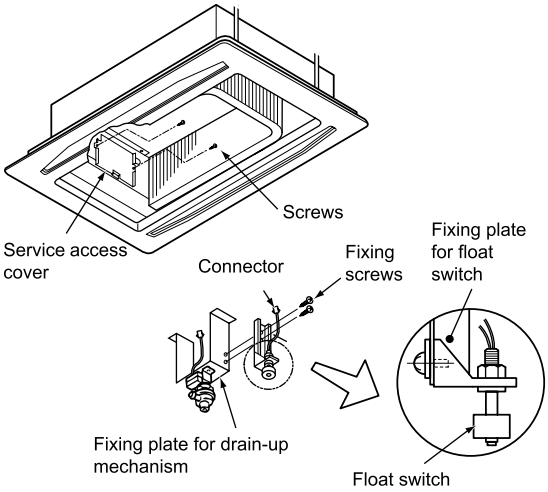

Loosen the resin nut securing the float switch and remove it.

NOTE

The torque value of the resin nut is 0.3 - 0.4 Nm. If the torque value is higher, the nut will be damaged.

10.3.7 Removal of the drain mechanism

Remove the air inlet grille as indicated in chapter *Removal of the long-lasting filter and the air inlet grille, see on page 309*.

Remove the bellmouth in line with the instructions given in chapter *Removal of the fan duct and the fan, see on page 310*.

Remove the drain pan as indicated in chapter *Removal of the drain pan, see on page 312*.

Separate the connectors from the drain pump and the float switch.

Remove the flange from the hose and remove the drain hose.

Remove the two screws from the plate securing the drain mechanism and remove it.

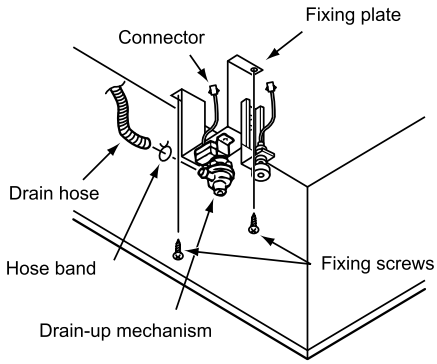

NOTE

When installing, fit the drain hose as far as possible in the pump.

10.3.8 Removal of the drain pan

Remove the air inlet grille as indicated in chapter *Removal of the long-lasting filter and the air inlet grille, see on page 309*.

Disconnect the cable between the indoor and outdoor unit and separate all of the connectors from the electrical box.

Remove the fan duct and the fan as indicated in chapter *Removal of the fan duct and the fan, see on page 310*

Empty the pan of water by removing the rubber plug.

CAUTION

- ***The plug is sealed with silicone but can be easily removed by pulling on the bottom of it.***
- ***Do not use a knife or similar to remove the rubber plug, as this could damage it.***
- ***Do not remove or damage the lower plug insulation when refitting.***

RCD-1.5 to 3.0 FSN

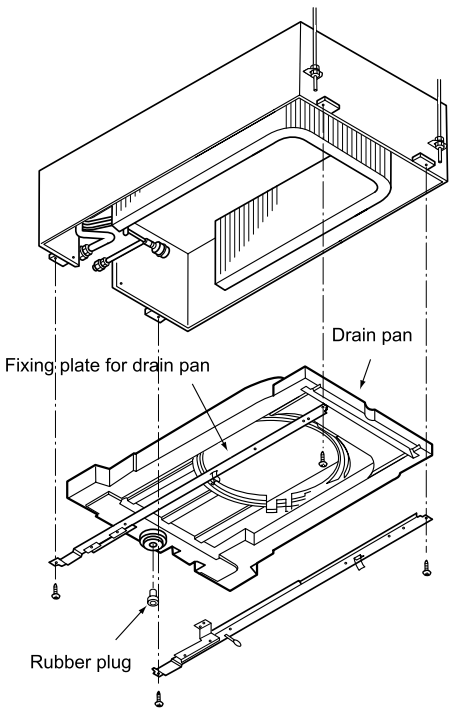

Check that the drainage hole is not blocked.

RCD-(1.0-3.0)FSN2: remove the two screws securing the reinforcement plate to the drain pan securing plate.

RCD-(4.0/5.0)FSN2: remove the two screws securing the support plate to the drain pan securing plate and remove it.

Remove the two drain pan securing plates and remove it.

CAUTION

Do not use a sharp tool, such as a screwdriver, to fit the rubber plug, as this could damage it.

RCD-4.0 and 5.0 FSN2

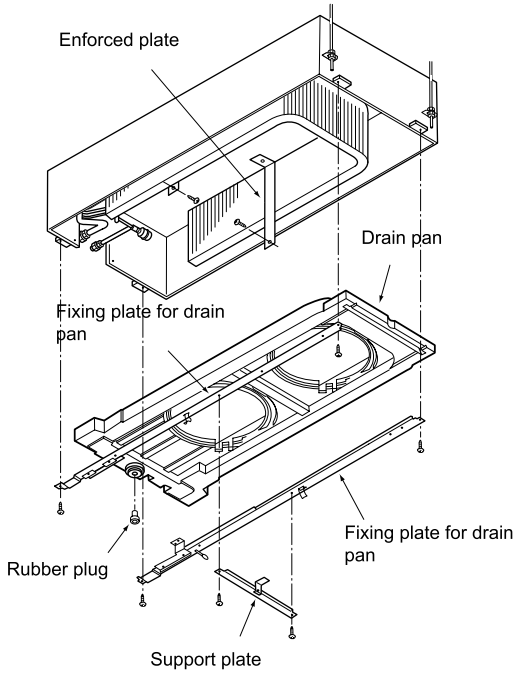

10.3.9 Removal of the thermistors from the liquid and gas pipes

Remove the air inlet grille as indicated in chapter *Removal of the long-lasting filter and the air inlet grille, see on page 309*.

Remove the fan duct and the fan as indicated in chapter *Removal of the fan duct and the fan, see on page 310*.

Remove the drain pan as indicated in chapter *Removal of the drain pan, see on page 312*.

Remove the butyl sheet covering the thermistor. Remove the plate securing the thermistor to the pipe on which it is located and remove.

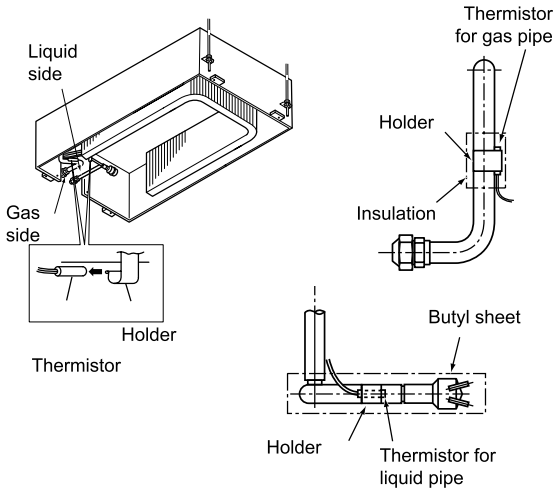

NOTE

- ***The thermistor protection and securing system is the same on the gas and liquid pipe.***
- ***The thermistors are secured with brackets.***

10.3.10 Removal of the electronic expansion valve coil

Secure the body of the valve using an appropriate wrench and loosen the nut with another wrench, turning it anti-clockwise.

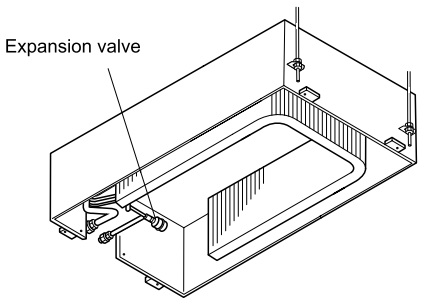

NOTE

Do not hold onto the motor when loosening the nut with a wrench. The base of the transmission part could become loose and break.

Remove the optional air panel in line with the instructions given in chapter *Removal of the optional air panel, see on page 309*.

Remove the fan duct and the fan as indicated in chapter *Removal of the fan duct and the fan, see on page 310*.

Remove the drain pan as indicated in chapter *Removal of the drain pan, see on page 312*.

Loosen the nut several turns to release the transmission part from the bolt.

Prepare the new transmission part (spare part) with the position of the transmission wheel (transmission bolt) already adjusted.

NOTE

- ***Pay attention to removal while replacing and prevent dust and foreign particles, etc. from entering it (the exposed part during removal is the mechanical part of the valve).***
- ***Do not damage the valve joint with tools.***

Fit the transmission part to the body of the valve, hold onto both and make sure their axes coincide before fitting the nut to the valve body bolt.

Tighten the nut by hand and apply the torque value: 12 Nm - 15 Nm.

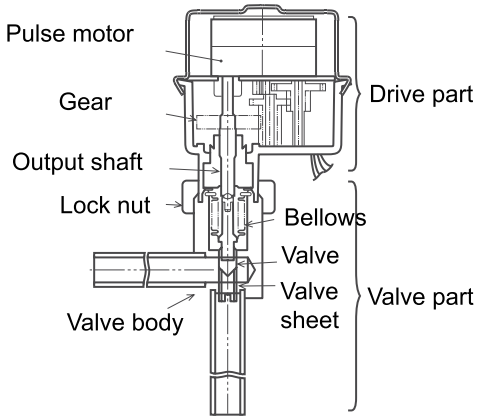

NOTE

- ***Do not apply significant force to the motor, such as rotational torque or bending load, while holding it with your hand and tightening the nut.***
- ***The direction of the eccentric part of the motor is fitted in the same way as the expansion valve. Although the motor is facing away from the piping connections on the valve body, modification of this direction does not affect the valve open/close function. Therefore, it is not necessary to adjust the direction of the motor if the motor position moves in the direction of rotation after replacement, as shown in the figure.***
- ***However, check that the motor direction for the electronic expansion valve coil does not touch another pipe or the side plate of the electrical box.***

Adjustment of direction is not required.

(However, pay attention not to touch the pipes or the drain pan.)

Direction of drive part

Once replaced, fit the electronic expansion valve in the reverse manner as indicated for the removal process.

Position the butyl sheet, attaching it correctly to the valve.

NOTE

Check that the cables do not touch the fan duct after installation is complete.

10.3.11 Removal of the automatic louver motor

Remove the optional air panel in line with the instructions given in chapter *Removal of the optional air panel, see on page 309*.

Remove the insulating material attached by the adhesive on both sides of panel C.

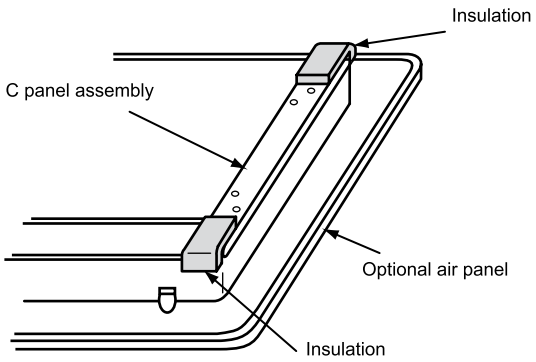

Remove the two screws securing panel C and remove the optional air panel.

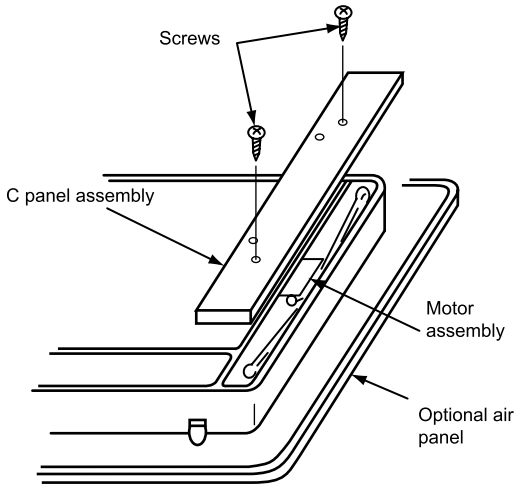

Remove the two screws securing the motor.

Remove the two stops by lifting the motor by hand in the direction of the arrow.

NOTE

- ***The stops can be removed by pulling them.***
- ***The motor can be separated by removing the connector at the same time.***

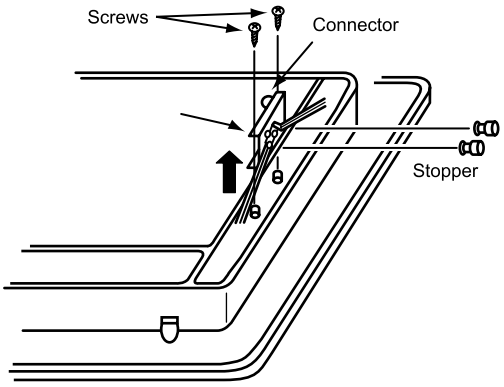

Remove the screw securing the handle and cut the plastic tie securing the motor cable.

Remove the two screws securing the motor and remove it.

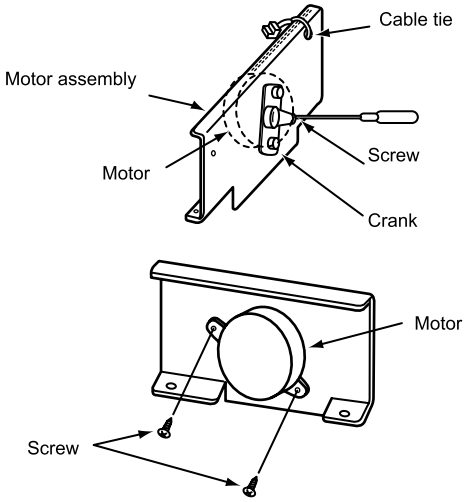

10.4 RPC - Ceiling

10.4.1 Removal of the air filter

Press the buttons on the grille backwards.

Open the air inlet grille downwards.

Lift the button and remove the filter.

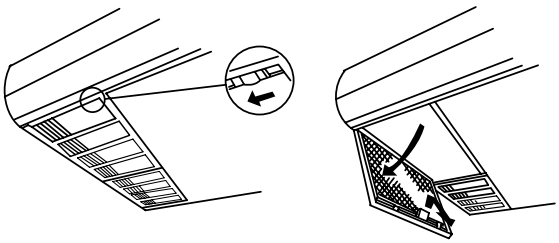

10.4.2 Removal of the side panel

Pull the side panel forwards.

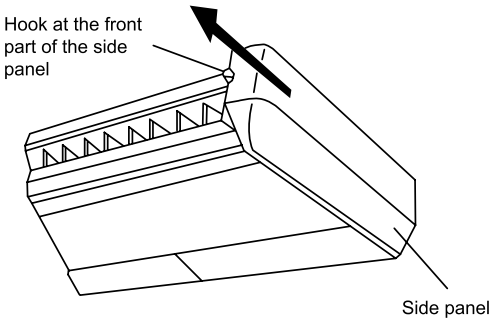

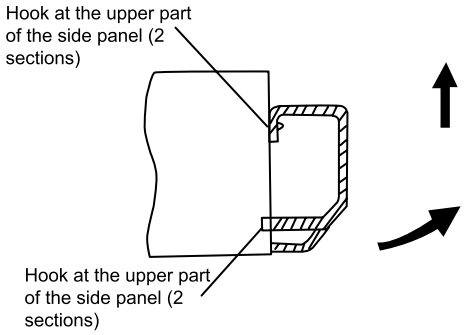

Release the hook from the lower part of the panel.

Lift the side panel.

10.4.3 Removal of the air outlet grille

Remove the side panel in line with the instructions given in chapter *Removal of the side panel, see on page 317*.

Remove the right shaft crank on the air louver.

Remove the four set screws from the louver and remove it.

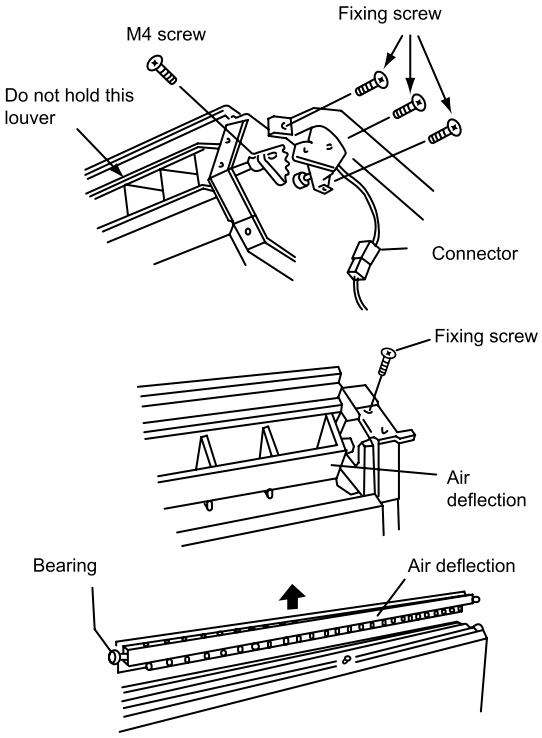

NOTE

The louver includes the linkage brackets.

10.4.4 Removal of the fan motor

Open the air inlet grille as indicated in chapter *Removal of the air filter, see on page 317*.

Remove the air inlet clip.

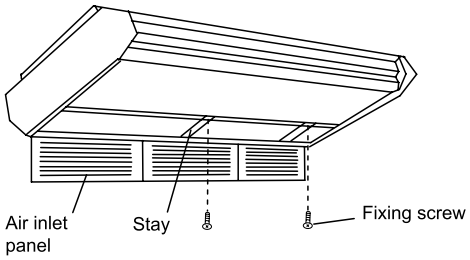

Separate the indoor fan motor connector.

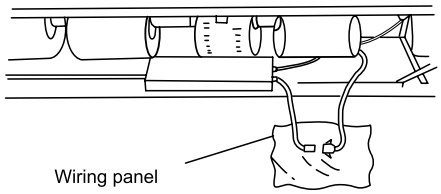

Nº	Part
1	Electrical box

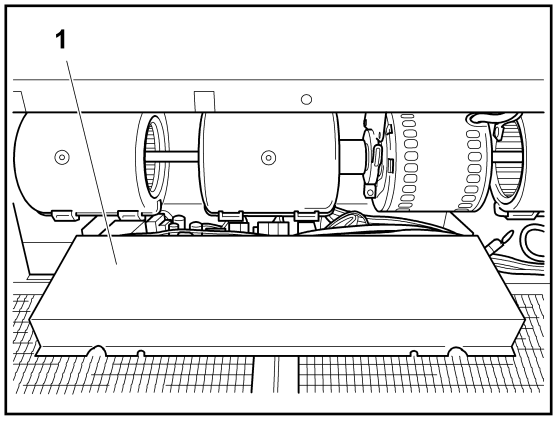

Remove the screws securing the box and attach to the lower frame.

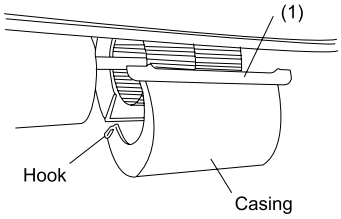

CAUTION

Hold onto the electrical box to prevent it from falling.

Press the four attachment points of the cover (1) inwards and remove it.

Loosen the coupling screws using a wrench.

Remove the securing flange and remove the fan motor by sliding it backwards.

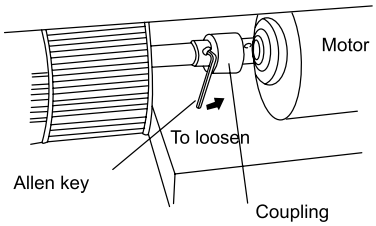

CAUTION

Hold onto the motor to prevent it from falling.

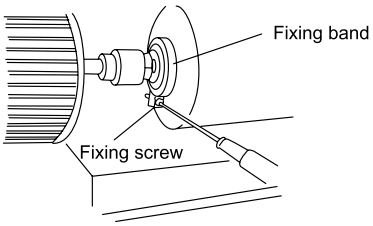

10.4.5 Removal of the fan shaft support

Remove the side panel in line with the instructions given in chapter *Removal of the side panel*, *see on page 317*.

Loosen the two bolts securing the support and the shaft using a hexagonal wrench.

Remove the four M8 set screws from the support and remove it.

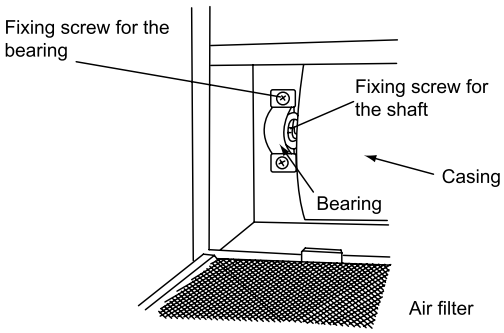

10.4.6 Removal of the coupling

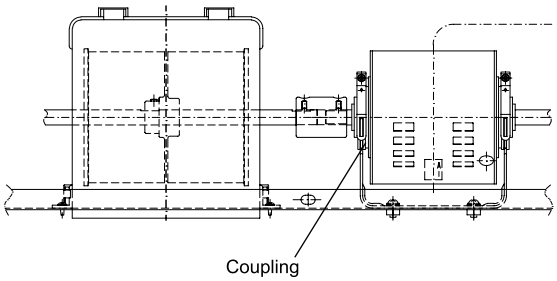

Remove the side panel in line with the instructions given in chapter *Removal of the side panel, see on page 317*.

Remove the cover in two parts, as indicated in section *Removal of the fan motor, see on page 318*.

Loosen the coupling screw using a hexagonal wrench.

Remove the M8 bolt securing the support as indicated in section *Removal of the fan shaft support, see on page 319*.

Remove the coupling after removing the shaft and fan unit.

10.4.7 Removal of the automatic louver motor

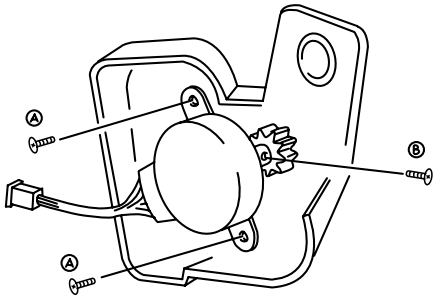

Remove the side panel in line with the instructions given in chapter *Removal of the side panel, see on page 317*.

Remove the bolts (M4) from the AS motor assembly and remove the right shaft of the discharge air grille.

CAUTION

Be particularly careful not to damage the AS motor.

Remove the two bolts securing the automatic louver motor and remove the AS motor assembly securing plate.

Remove the bolt securing the automatic louver motor shaft and the AS pinion.

NOTE

- ***Torque value of the two screws securing the automatic louver motor: 0.8 Nm.***
- ***Torque value of the screw securing the automatic louver motor shaft: 0.4 Nm.***
- ***Apply the torque value using a torque wrench.***

10.4.8 Removal of the thermistors from the liquid and gas pipes

Remove the side panel in line with the instructions given in chapter *Removal of the side panel, see on page 317*.

Remove the lower panel.

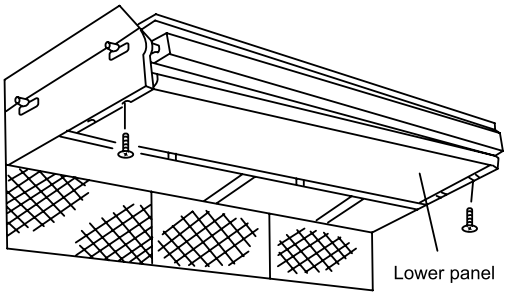

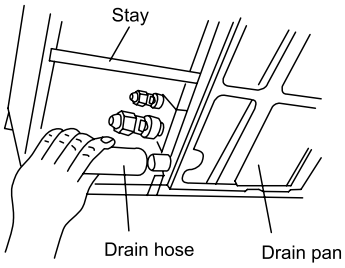

Disconnect the drain hose and remove the drain pan.

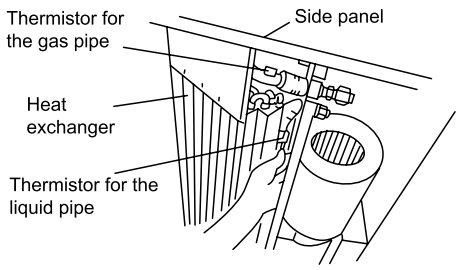

Nº	Part
1	Gas thermistor (yellow connector)
2	Liquid thermistor (black connector)

Remove the thermistors from the liquid and gas pipe.

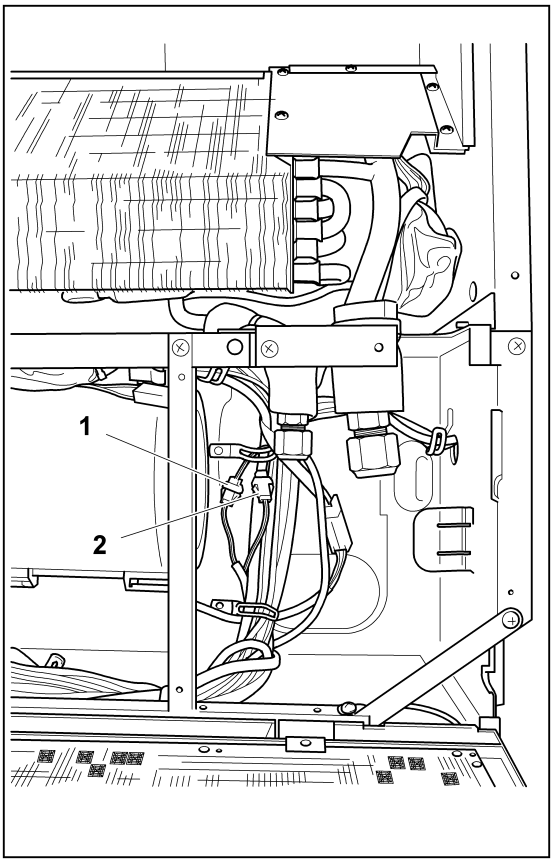

10.4.9 Removal of the printed circuit board (PCB)

Open the air inlet panel as indicated in chapter *Removal of the air filter, see on page 317*.

Separate the connector from the fan motor wiring.

Remove the screws securing the box and attach to the lower frame.

CAUTION

Hold onto the electrical box to prevent it from falling.

Remove the panel.

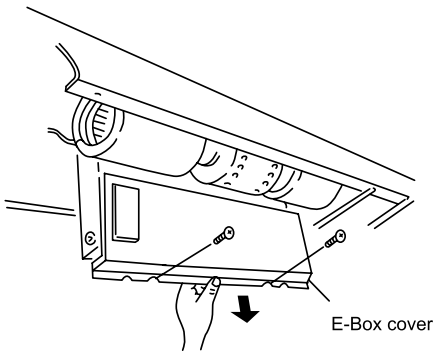

Nº	Part
1	PCB

Carefully remove the securing supports from the printed control board (PCB) (four) by pressing carefully on the support tabs with long-tipped pliers.

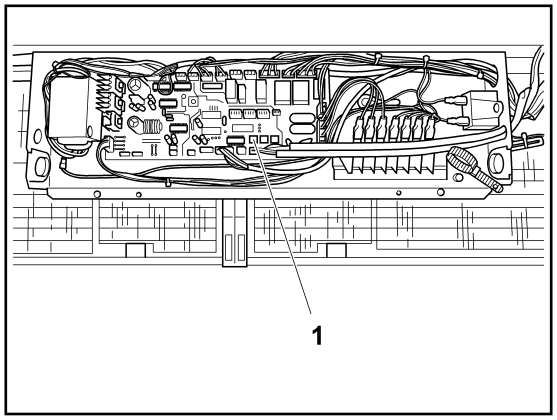

CAUTION

- ***Do not touch the electrical components of the PCB.***
- ***Do not apply force to the PCB, as this could damage it.***
- ***Pay special attention to the position of the connectors on the PCB. An incorrect position during installation may damage the PCB.***

Nº	Part
1	Extended support part
2	PCB

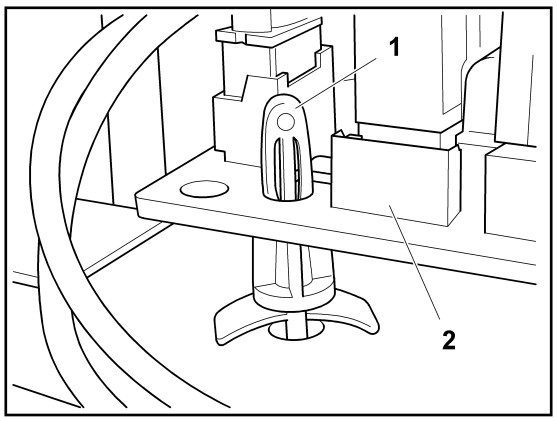

10.5 RPI-(0.8-6.0)FSN(2/3)E

10.5.1 Removal of the electrical box

Nº	Part
1	Location of the electrical box cover

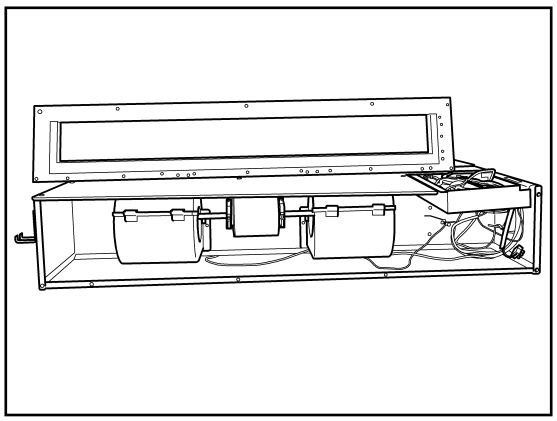

NOTE

- ***The figures show the service procedures for the RPI-(0.8–1.5)FSN2E. model.***
- ***The service procedures for the RPI-(2.0–6.0)FSN3E models are the same.***

Nº	Part
1	Set screw
2	Terminal board
3	Transformer
4	PCB

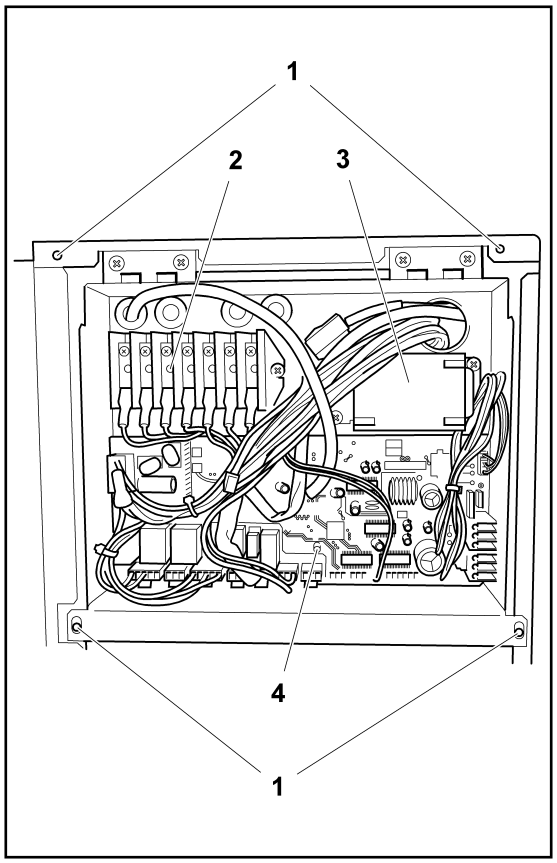

10.5.2 Removal of the inlet and outlet air thermistors

Inlet air thermistor

Nº	Part
1	Tie
2	Cable clamp
3	Thermistor

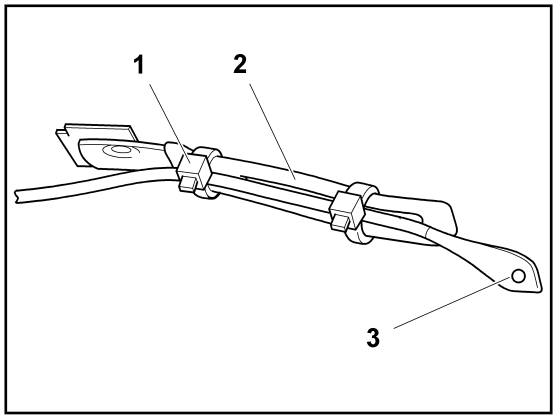

NOTE

Disconnect and remove the thermistor.

The thermistor is located on the outlet side of the unit.

Nº	Part
1	Location of the air inlet thermistor

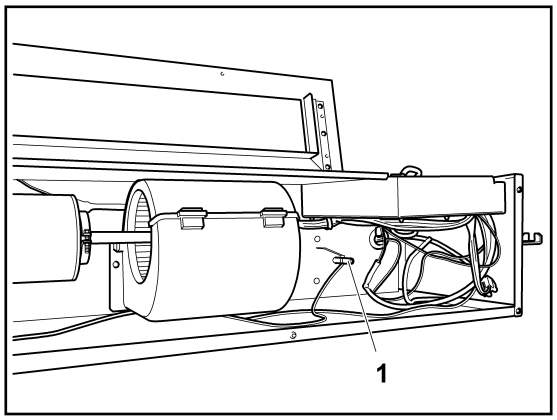

NOTE

To disconnect and remove the appropriate thermistor, previously see the chapter corresponding to the wiring diagrams in this Manual.

Remove the screws securing the rear cover of the unit.

Disconnect and remove the thermistor.

Outlet air thermistor

Nº	Part
1	Air outlet thermistor

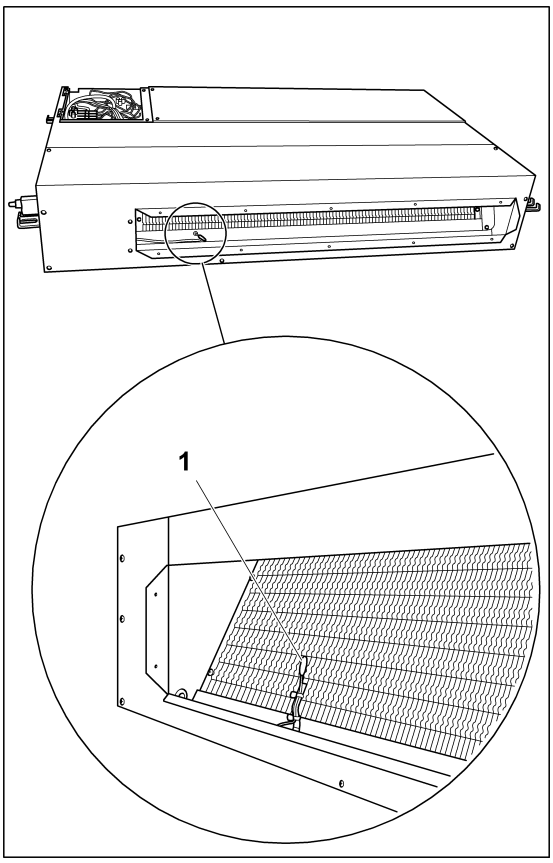

NOTE

To disconnect and remove the appropriate thermistor, previously see the chapter corresponding to the wiring diagrams in this Manual.

10.5.3 Removal of the thermistors from the liquid and gas pipes

Nº	Part
1	Electrical box
2	Drain pump
3	Screws

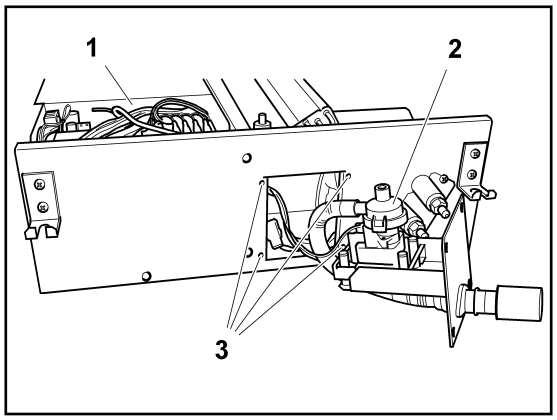

NOTE

- ***To disconnect and remove the appropriate thermistor, previously see the chapter corresponding to the wiring diagrams in this Manual.***
- ***Cover the thermistors with cork tape or pipe insulation, depending on the location. Both materials are factory-supplied. Replace them if damaged during maintenance work.***

Remove the electrical box cover.

Remove the service cover.

The liquid and gas pipe thermistors are secured to the copper piping by a special clamp.
- Liquid pipe thermistor: covered with cork tape.
- Gas pipe thermistor: covered with pipe insulation.

Nº	Part
1	Location of the thermistor
2	Location of the thermistor

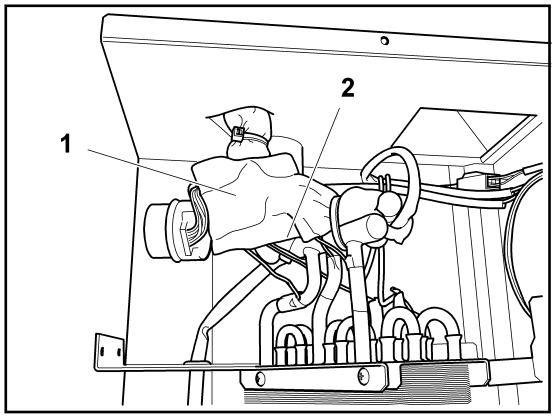

NOTE

- ***Black connector: liquid thermistor.***
- ***Yellow connector: gas thermistor.***

10.5.4 Removal of the fan parts

Fan parts: fan motor, fan casing and duct.

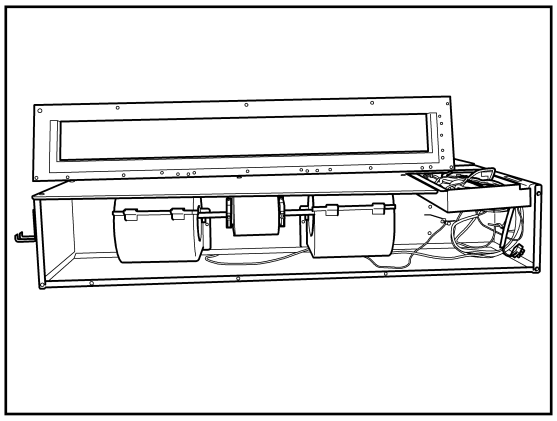

Nº	Part
1	Locks
2	Duct
3	Fixture supports
4	Fan motor
5	Fan casing

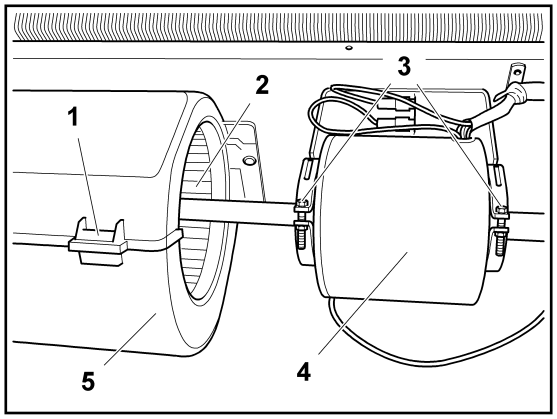

Remove the rear cover as indicated in chapter *Removal of the inlet and outlet air thermistors, see on page 324*.

Remove the tape located in the centre of the casing.

Press the locks and remove half of the fan casing.

Remove the fixture support screws and carefully remove the motor together with the fans.

Loosen the screws securing the fans to the motor shaft.

NOTE

If the fan casing is to be fully removed, remove the screws securing the other half to the fan motor fixture.

10.5.5 Removal of the drain mechanism

Nº	Part
1	Drain pump

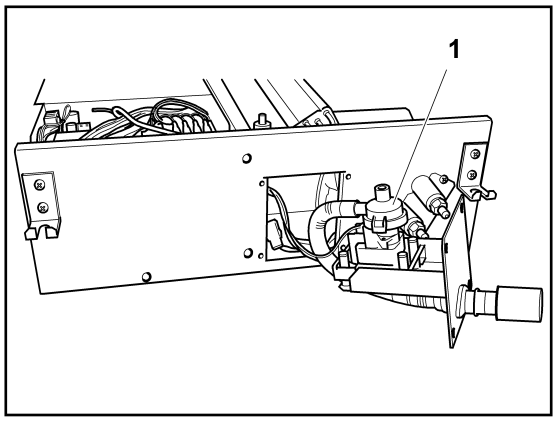

NOTE

To disconnect and remove the drain mechanism, previously see the chapter corresponding to the wiring diagrams in this Manual.

Remove the drain pump support screws and remove it.

Nº	Part
1	Bolts
2	Drain pump
3	Service cover

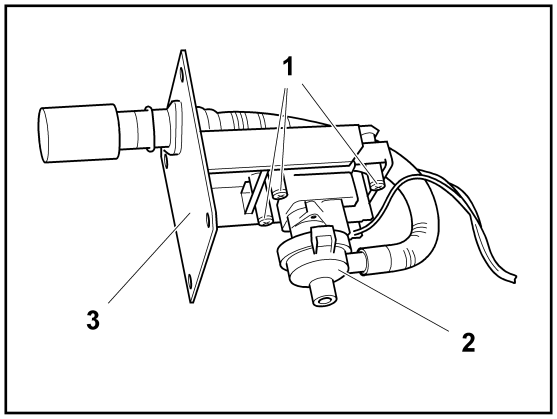

NOTE

Prior to installing the new pump:

1 ***Remove the electrical box from the unit to connect it to the printed circuit board (PCB) in line with the instructions given in chapter Removal of the electrical box, see on page 323.***

2 ***Seal the drain hose gaskets correctly.***

10.5.6 Removal of the float switch

Nº	Part
1	Float switch position

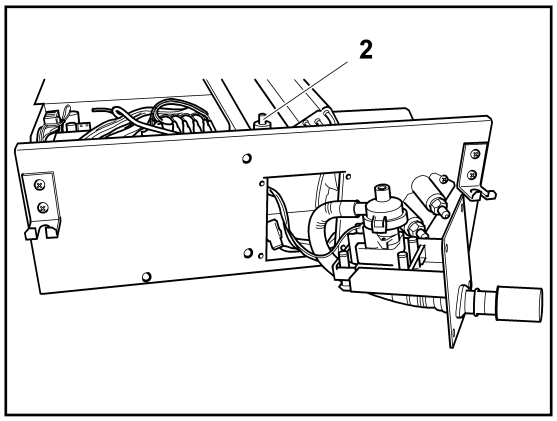

NOTE

To disconnect and remove the float switch, previously see the chapter corresponding to the wiring diagrams in this Manual.

Remove the drain pump support screws and remove it.

Loosen the screws securing the float switch to the support.

Loosen the resin nut securing the float switch and remove it.

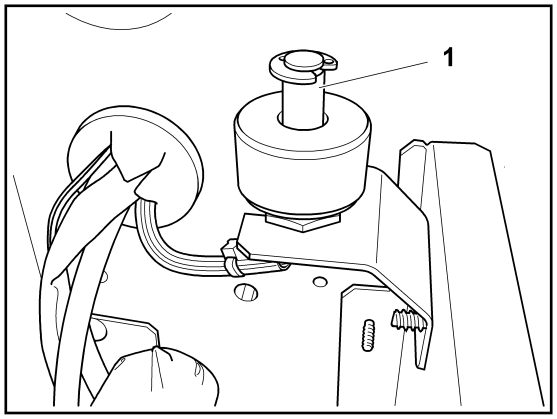

NOTE

The torque value of the resin nut is 0.3 - 0.4 Nm. If the torque value is higher, the nut will be damaged.

Nº	Part
1	Float switch

10.5.7 Removal of the air filter

Nº	Part
1	Air filter
2	Screws
3	Air filter fixture bar

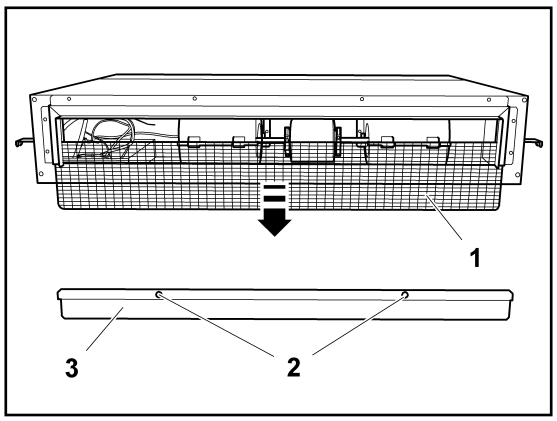

10.6 RPI-(8.0-10.0)FSN3E - Ducted indoor unit

10.6.1 Removal of the electrical box cover

Remove the set screws -A- from the electrical box cover to access the electrical components.

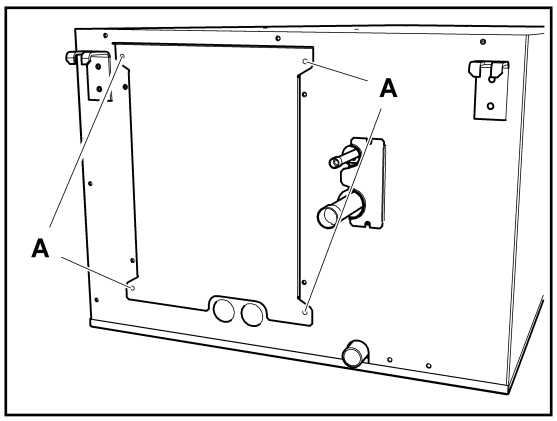

10.6.2 Removal of electrical components

Remove the electrical box cover *Removal of the electrical box cover, see on page 329.*

Separate the connections of all electrical components.

Remove the set screws -A- and separate the full electrical component support -B-.

CAUTION

Handle the support carefully to avoid damaging the electrical components.

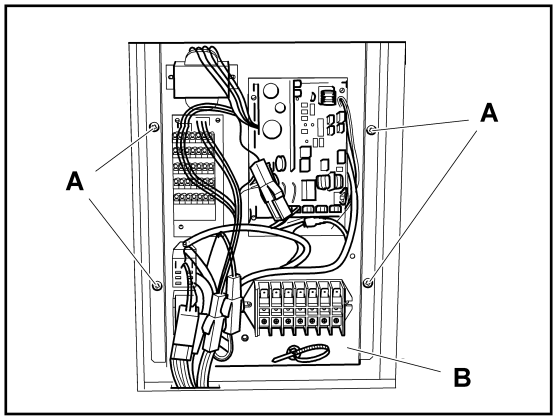

10.6.3 Removal of the inlet and outlet air thermistors

Inlet air thermistor

Remove the air filter *Removal of the air filter, see on page 333.*

NOTE

The inlet air thermistor -A- is located on the left-hand side of the air inlet to the unit.

Remove the electrical box cover *Removal of the electrical box cover, see on page 329.*

Disconnect and remove the thermistor.

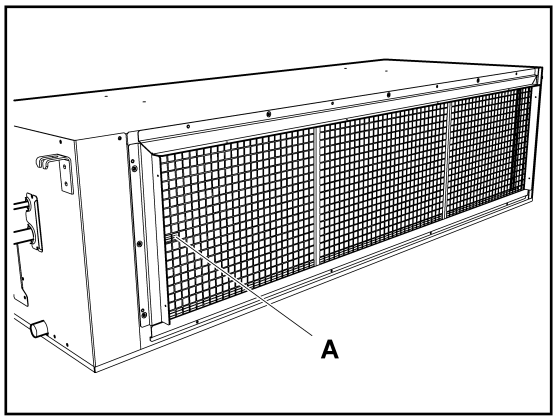

NOTE

To disconnect and remove the appropriate thermistor, previously see the chapter corresponding to the wiring diagrams in this Manual.

Nº	Part
1	Tie
2	Cable clamp
3	Thermistor

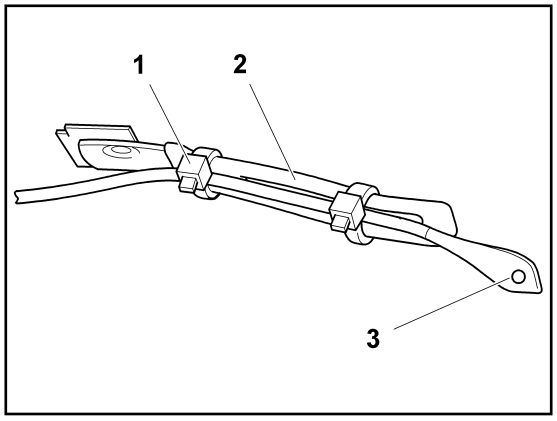

Outlet air thermistor

The outlet air thermistor -B- is located on the right-hand side of the air outlet from the unit.

Remove the electrical box cover *Removal of the electrical box cover, see on page 329*.

Disconnect and remove the thermistor.

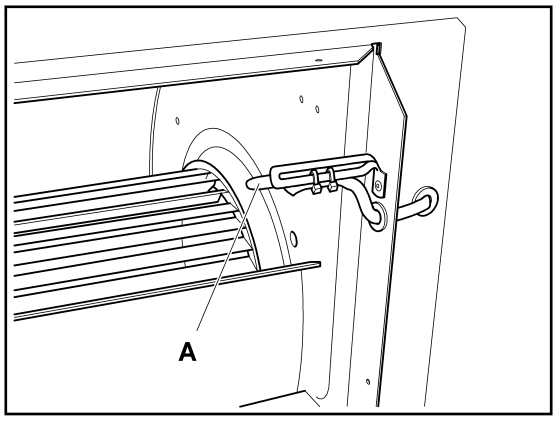

NOTE

To disconnect and remove the appropriate thermistor, previously see the chapter corresponding to the wiring diagrams in this Manual.

Nº	Part
1	Tie
2	Cable clamp
3	Thermistor

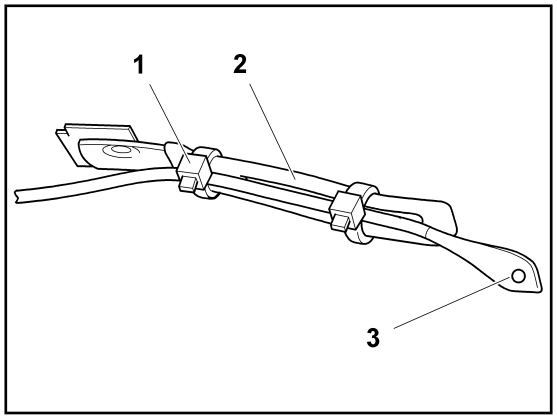

10.6.4 Removal of the thermistors from the liquid and gas pipes

Remove all screws -A- from the lower cover of the unit and separate it.

Remove the electrical box cover *Removal of the electrical box cover, see on page 329*.

Disconnect the thermistor.

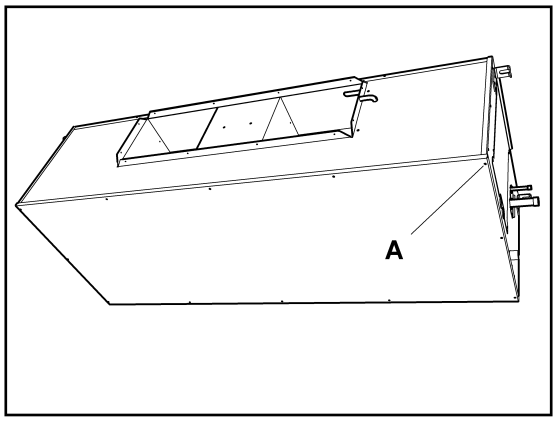

NOTE

- ***To disconnect and remove the appropriate thermistor, previously see the chapter corresponding to the wiring diagrams in this Manual.***
- ***Black connector: liquid thermistor.***
- ***Yellow connector: gas thermistor.***

Remove the gas -A- and liquid -B- thermistor insulation cover.

Remove the special clamp holding the thermistor to the copper piping and remove it.

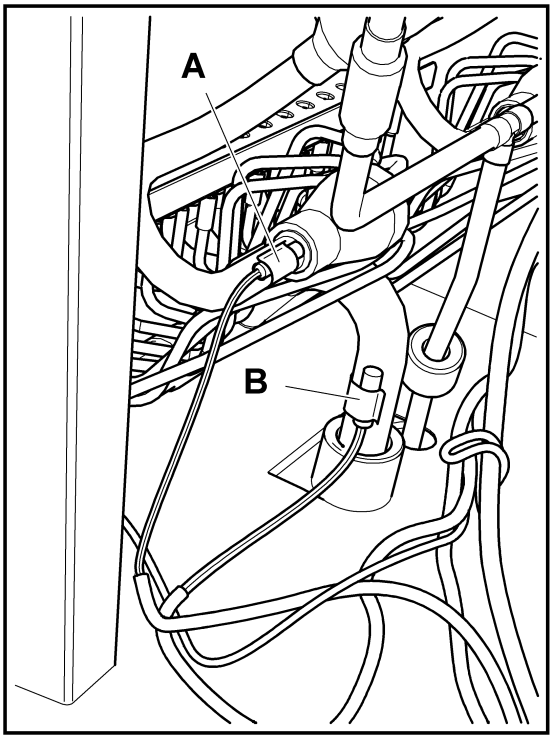

NOTE

When fitting the thermistors, remember that they must be secured correctly by the special clamp and completely covered by the previously removed insulation.

10.6.5 Removal of the drain pan

Remove all screws -A- from the lower cover of the unit and separate it.

Release the unit drainage connection.

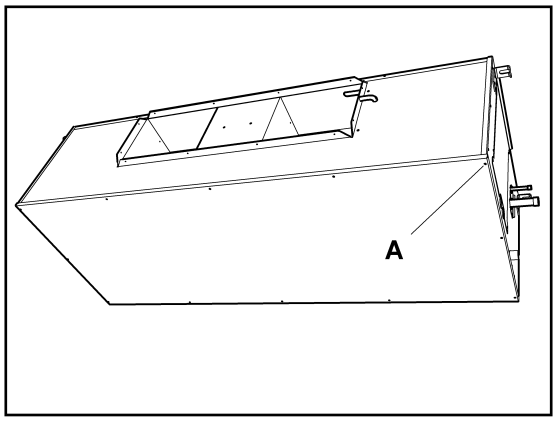

Remove the screws -A- securing the drain pan and remove it.

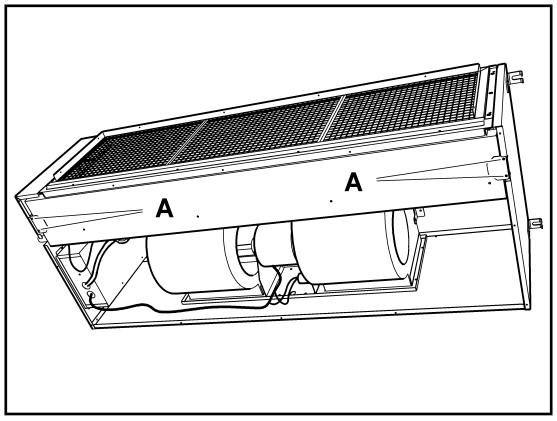

NOTE

When fitting, seal the drain hose gasket correctly.

10.6.6 Fan removal

Remove all screws -A- from the lower cover of the unit and separate it.

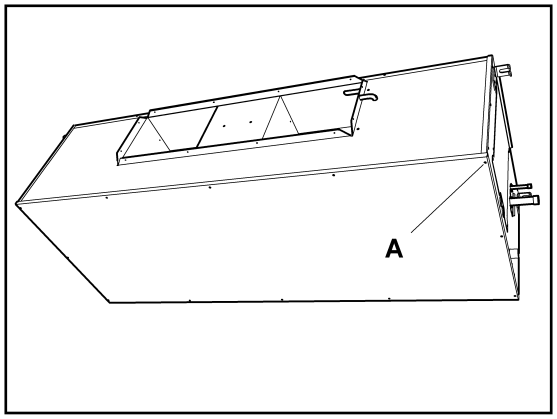

Remove the electrical box cover *Removal of the electrical box cover, see on page 329*.

Disconnect the fan motor.

NOTE

To disconnect and remove the fan motor, previously see the chapter corresponding to the wiring diagrams in this Manual.

Remove the drain pan *Removal of the drain pan, see on page 331*.

Remove the wiring A- from the electrical box and release it from the support -B-.

Remove the screws -C- on both sides of the fan.

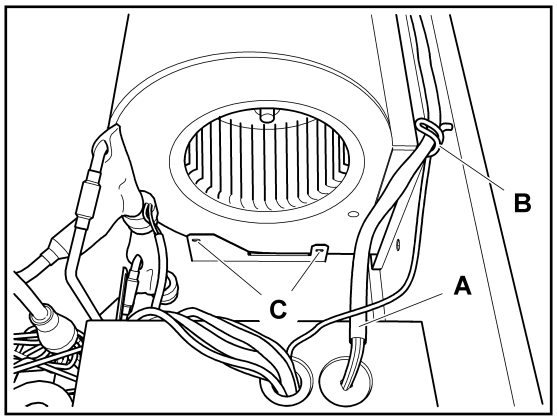

CAUTION

- ***Make sure the fan can be removed correctly, without the risk of injuring anyone in the surrounding area.***
- ***The fan is heavy. Request the assistance of two operators to hold the fan while it is being removed.***

Remove the screws -A- on both sides of the fan and remove the unit.

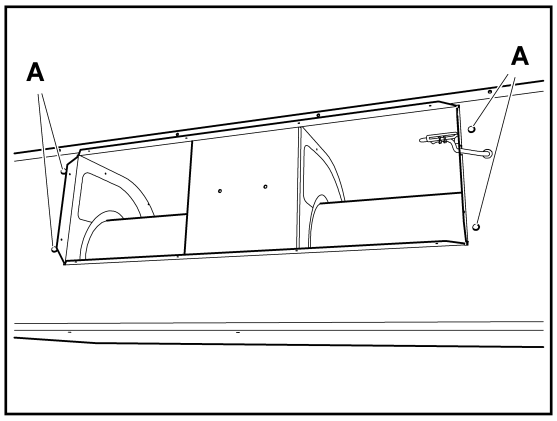

When fitting, connect the fan motor connector to the electrical box in line with the previous configuration:

- Connector CN24 LSP(Low Static Pressure); (factory-supplied).
- Connector CN25 HSP(High Static Pressure).

NOTE

Service cover fan assembly parts (runner, fan casing, fan motor) must be performed once the fan assembly has been removed from the unit.

10.6.7 Removal of the float switch

Remove all screws -A- from the lower cover of the unit and separate it.

Remove the drain pan *Removal of the drain pan, see on page 331*.

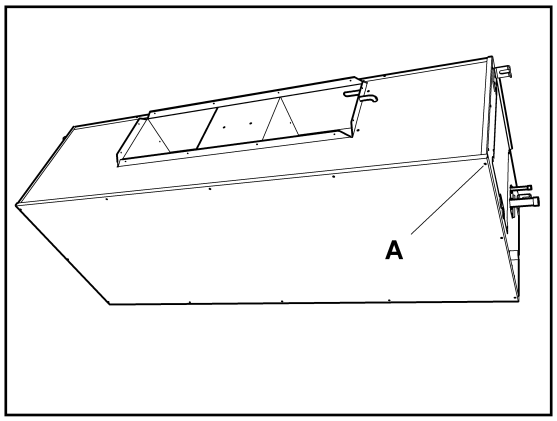

NOTE

To disconnect and remove the float switch, previously see the chapter corresponding to the wiring diagrams in this Manual.

Loosen the resin nut securing the float switch -A- and remove it. If the switch support is to be removed, remove screws -B-.

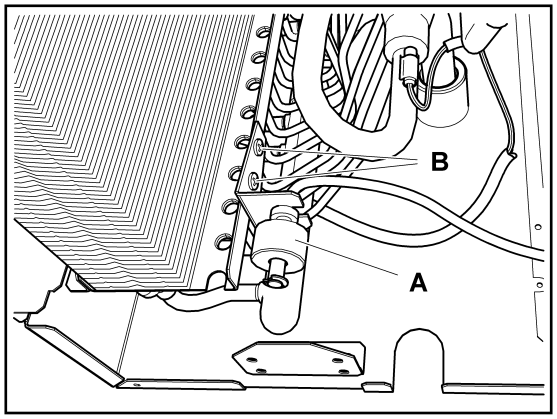

NOTE

The torque value of the resin nut is 0.3 - 0.4 Nm. If the torque value is higher, the nut will be damaged.

10.6.8 Removal of the air filter

Remove the four set screws from the support fixture -1- of the air filter -2- and separate both parts.

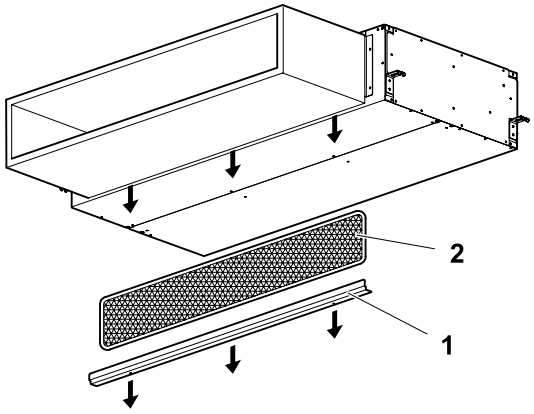

10.7 RPIM - Ducted indoor unit

10.7.1 Removal of the electrical box

Nº	Part
1	Location of the electrical box cover.

Remove the electrical box cover to access the electrical components.

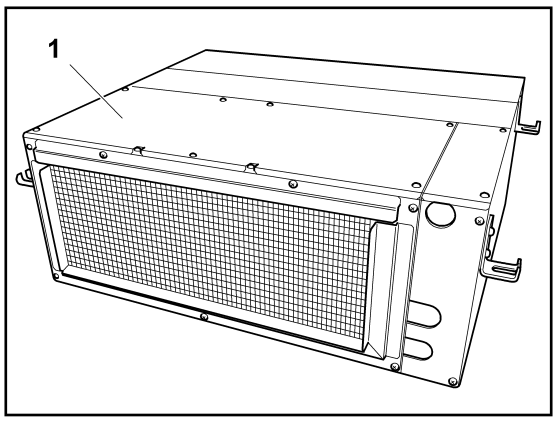

Nº	Part
1	Set screws
2	Terminal board
3	Transformer
4	PCB

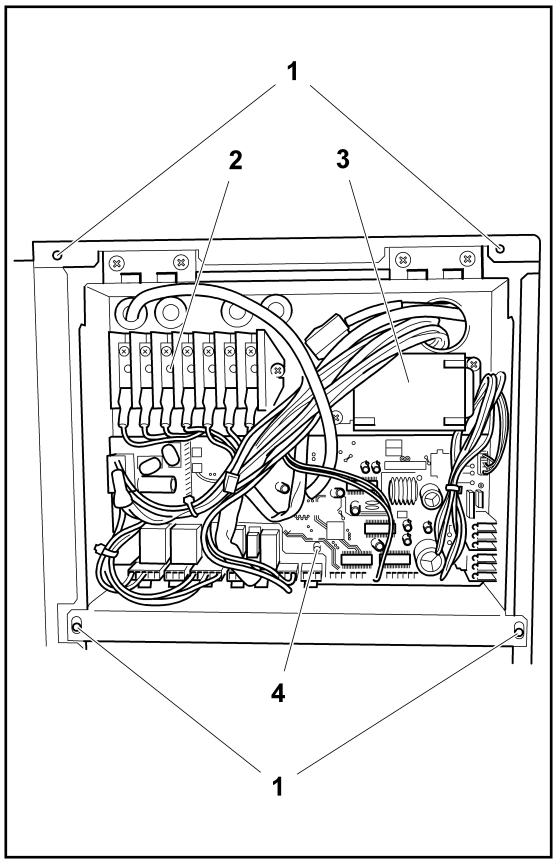

Remove the set screws and remove the electrical box from the unit.

NOTE

The electrical box is fitted with a hinge.

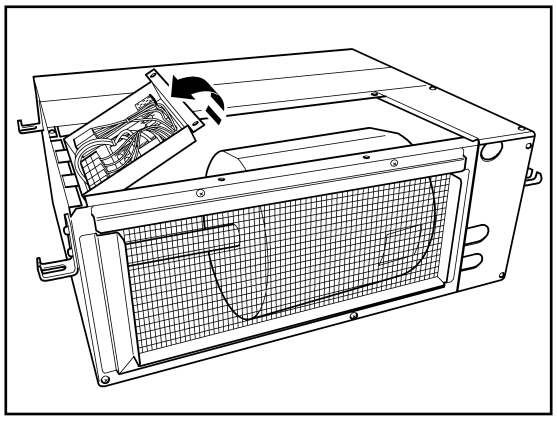

10.7.2 Removal of the inlet and outlet air thermistors

Inlet air thermistor

Nº	Part
1	Tie
2	Cable clamp
3	Thermistor

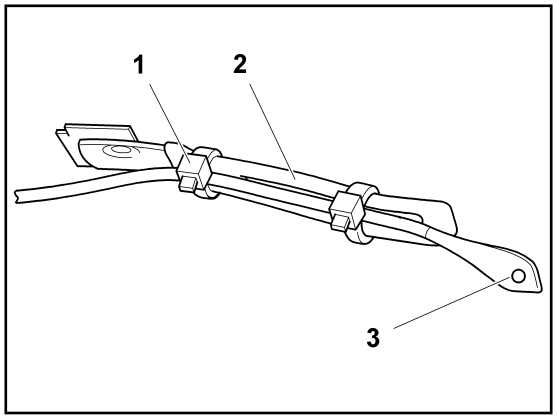

NOTE

To disconnect and remove the appropriate thermistor, previously see the chapter corresponding to the wiring diagrams in this Manual.

Nº	Part
1	Location of the air inlet thermistor
2	Rear cover

Remove the screws securing the rear cover of the unit.

Disconnect and remove the thermistor.

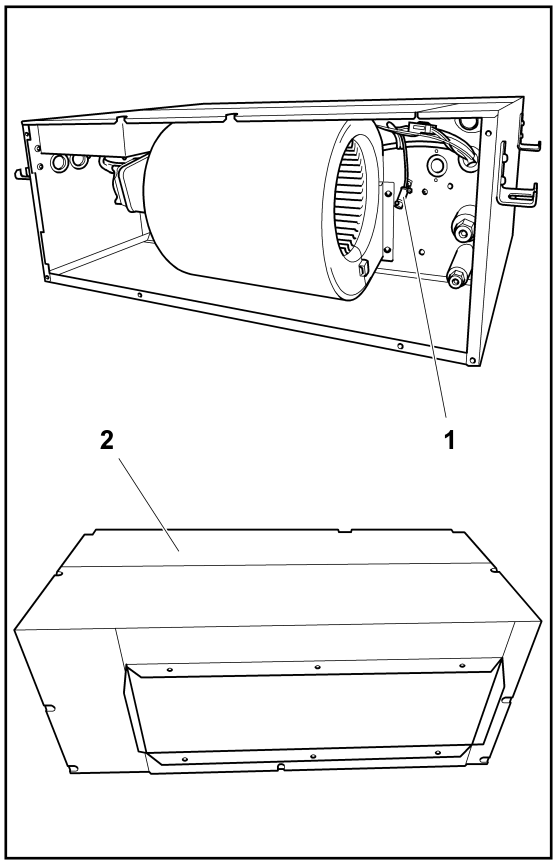

Outlet air thermistor

Nº	Part
1	Outlet thermistor

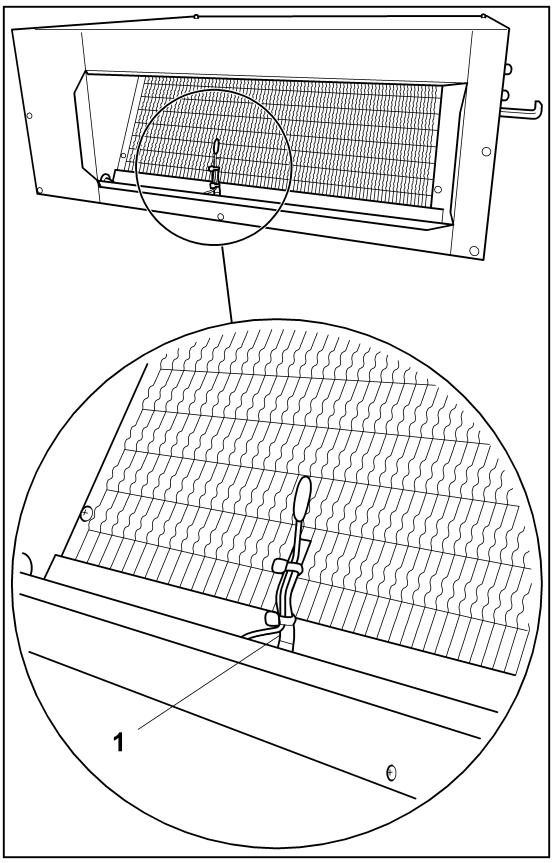

NOTE

- ***The thermistor is located on the outlet side of the unit.***
- ***To disconnect and remove the appropriate thermistor, previously see the chapter corresponding to the wiring diagrams in this Manual.***

Disconnect and remove the thermistor.

10.7.3 Removal of the thermistors from the liquid and gas pipes

Nº	Part
1	Screws

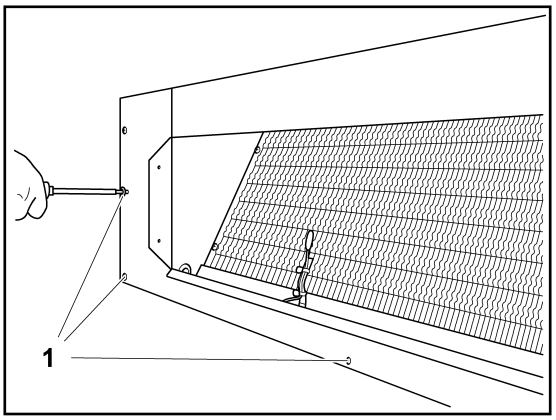

NOTE

- ***To disconnect and remove the appropriate thermistor, previously see the chapter corresponding to the wiring diagrams in this Manual.***
- ***Cover the thermistors with cork tape or pipe insulation, depending on the location. Both materials are factory-supplied. Replace them if damaged during maintenance work.***

Remove the electrical box cover.

Remove the service cover.

The liquid and gas pipe thermistors are secured to the copper piping by a special clamp.

- Liquid pipe thermistor: covered with cork tape.
- Gas pipe thermistor: covered with pipe insulation.

Nº	Part
1	Location of the thermistor

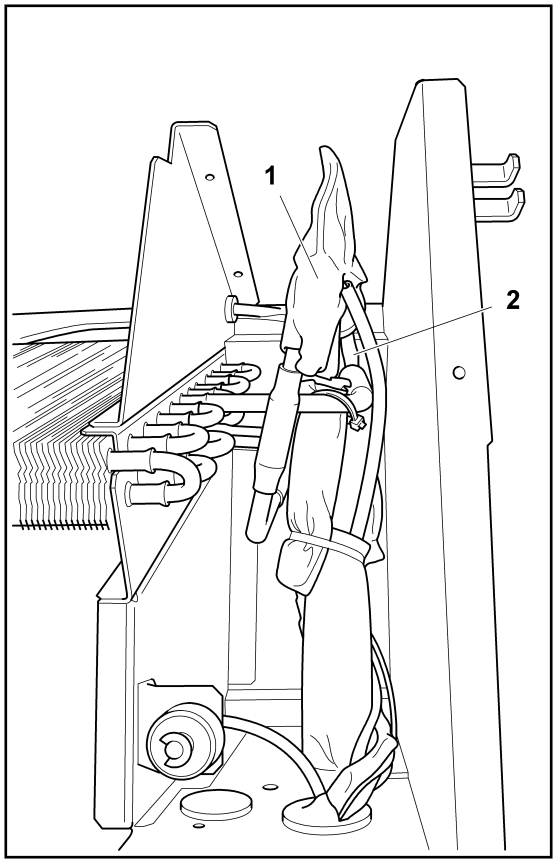

NOTE

- ***Black connector: liquid thermistor.***
- ***Yellow connector: gas thermistor.***

10.7.4 Removal of the fan parts

Fan parts: fan motor, fan casing and duct.

Remove the rear cover as indicated in chapter *Removal of the inlet and outlet air thermistors, see on page 324*.

Remove the tape located in the centre of the casing.

Press the locks and remove half of the fan casing.

Remove the fixture support screws and carefully remove the motor together with the fans.

Loosen the screws securing the fans to the motor shaft.

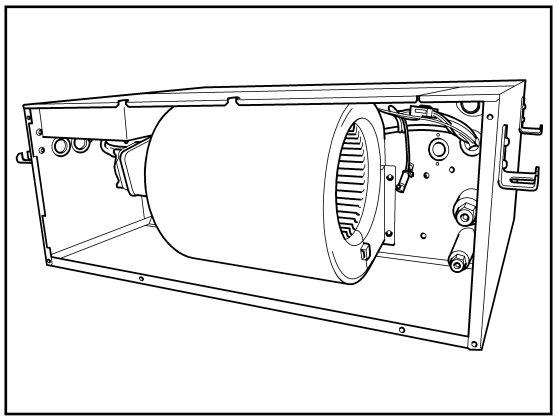

Nº	Part
1	Fan casing
2	Lock
3	Fan duct
4	Shaft
5	Fan motor

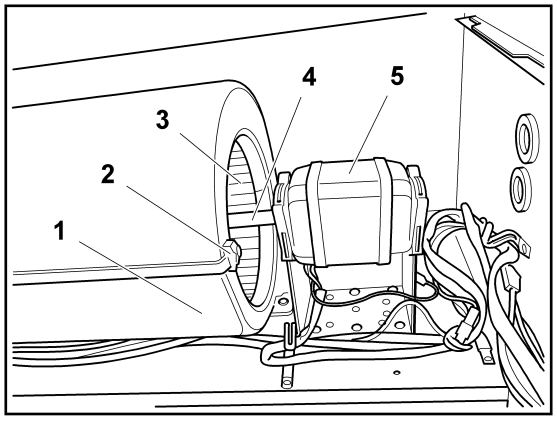

NOTE

If the fan casing is to be fully removed, remove the screws securing the other half to the fan motor fixture.

10.7.5 Removal of the float switch

Nº	Part
1	Float switch position

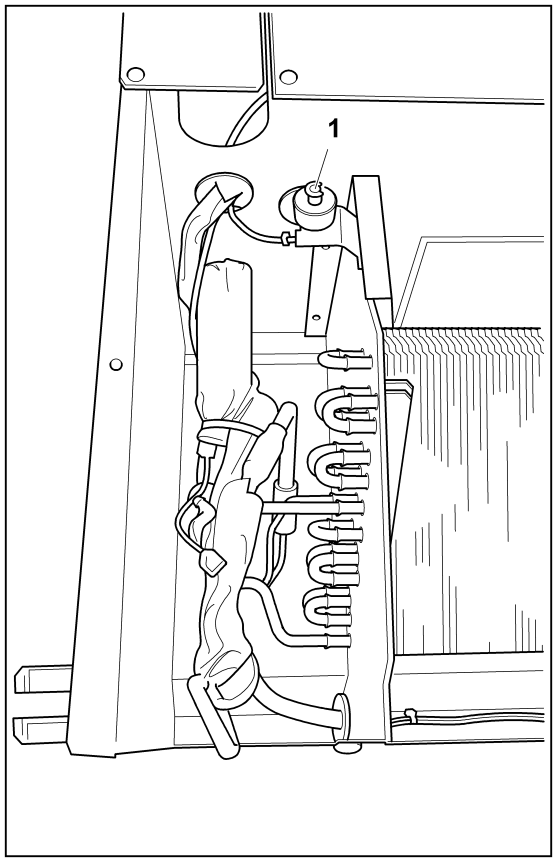

NOTE

To disconnect and remove the float switch, previously see the chapter corresponding to the wiring diagrams in this Manual.

Remove the necessary covers to access the float switch.

Loosen the screws securing the float switch to the support.

NOTE

The torque value of the resin nut is 0.3 - 0.4 Nm. If the torque value is higher, the nut will be damaged.

Nº	Part
1	Float switch

Loosen the resin nut securing the float switch and remove it.

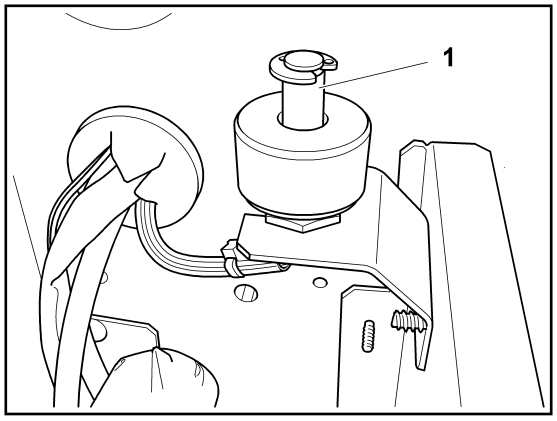

10.7.6 Removal of the air filter

Nº	Part
1	Air filter fixture bar

Remove the air filter fixture support screws and remove the air filter.

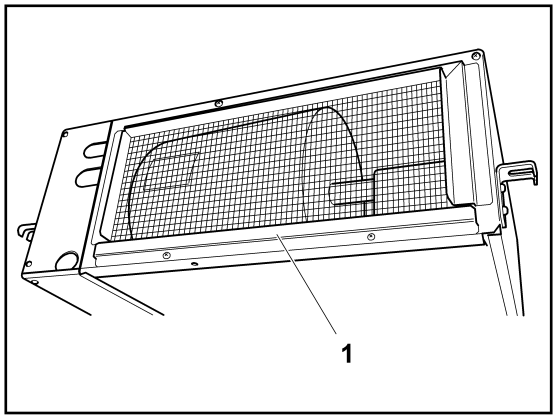

Nº	Part
1	Air filter
2	Screws
3	Air filter fixture bar

Pull the air filter downwards.

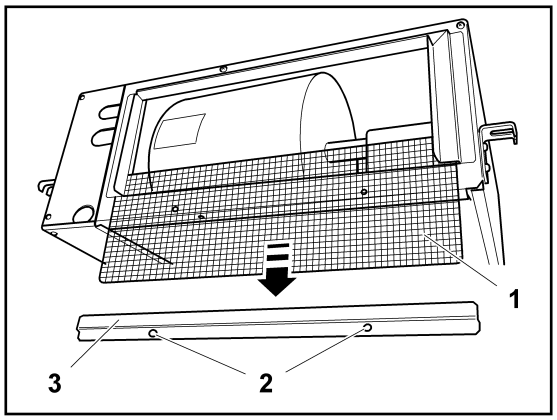

10.8 RPK - FSN2M Wall mounted

10.8.1 Removal of the air filter

RPK-(1.0-2.0)FSN(H)2M

Pull the right and left side of the air inlet grille upwards.

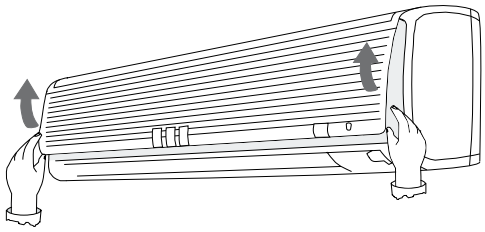

Pull the air filter downwards and detach from the hinge.

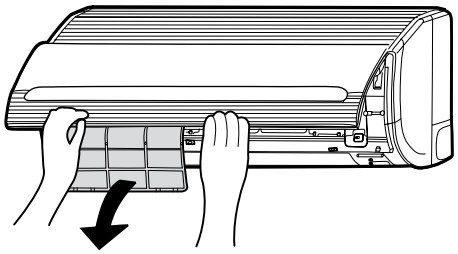

RPK-(2.5-4.0)FSN2M

NOTE

To remove the filter, change the position of the louver using the PC-ART remote control or the PC-RLH3A remote control.

PC-ART remote control:

Change the position of the louver by pressing ▲ ▼. The same symbol is shown on the liquid crystal display.

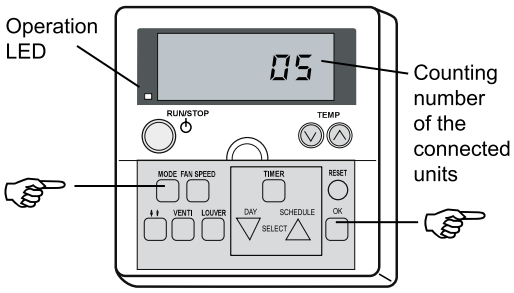

NOTE

Where several units are controlled by the same remote control, press the TEMP button and then ▲ ▼ to specify the direction in which the louver is to be opened.

Press the TIMER button. Ensure the louver remains horizontal.

NOTE

- ***By pressing ▼ when the louver is in the closed position, it will move to a horizontal position.***
- ***By pressing ▲ when the louver is horizontal, it will move to the closed position.***

PC-LH3A remote control:

Press the RESET button.

Change the louver angle to horizontal.

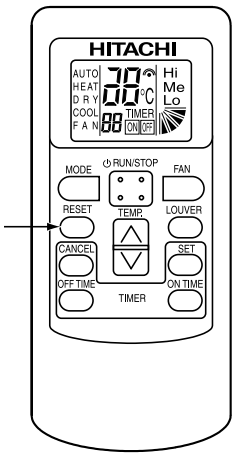

NOTE

By pressing RESET when the louver is horizontal, it will move to the closed position.

Filter removal

Pull the air filter downwards from the air filter grille and clean the area.

Move the louver after cleaning the air filter.

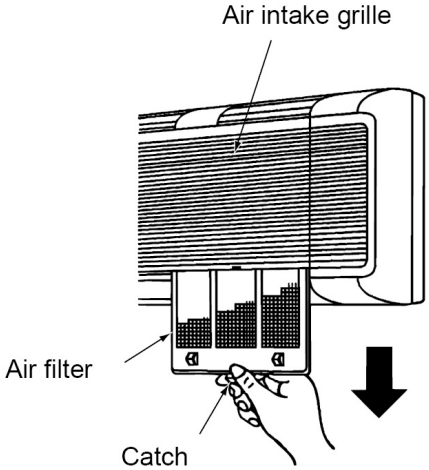

10.8.2 Removal of the front panel

Removal of the front panel (only RPK-(1.0-1.5)FSH(H)2M)

Remove the right side cover to connect the refrigerant pipes and wiring and to check the drainage water flow.

CAUTION

Completely cover the front panel with a sheet of plastic to protect it during installation work.

Press on the PUSH marks on both ends of the front panel and open the suction grille by pulling it forwards.

Remove the screw from the centre of the front panel. Then close the panel.

Remove the three bushings from the lower part of the air outlet and remove the three screws.

Hold the front panel on both sides, pull it gently forwards and lift slightly, avoiding touching the louver on the air outlet.

Release the three hooks at the top of the panel from the holes in the unit casing and remove the panel forwards.

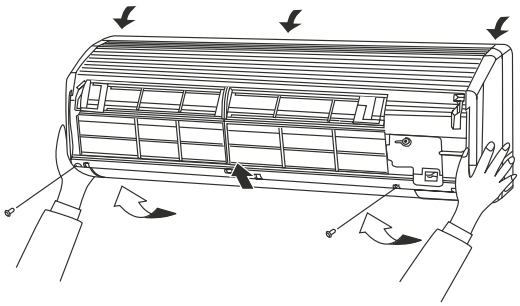

CAUTION

Do not knock the front panel while removing it as this could break the panel casing.

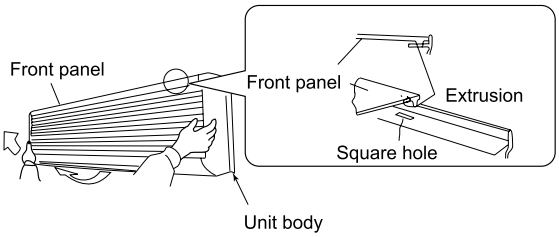

Start with the air outlet part when fitting the front panel. Then locate the three hooks at the top of the front panel.

Open the front panel as described and secure the screw in the centre of the panel.

Press the front attachment area and make sure there are no gaps between the front panel and the unit casing.

After fitting the front panel, tighten the three screws at the bottom of the air outlet and cover with the bushings.

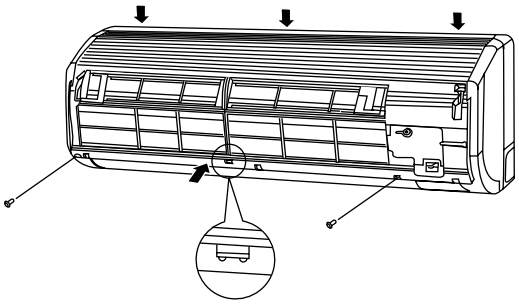

NOTE

- ***There are three spacer stops inside the front panel.***
- ***Gaps between the front panel and the unit casing may lead to air or condensate leaks.***

Removal of the front panel (RPK -2.0FSN2M only)

Remove the right side cover to connect the refrigerant pipes and wiring and to check the drainage water flow.

CAUTION

Completely cover the front panel with a sheet of plastic to protect it during installation work.

Remove the three bushings and the screws.

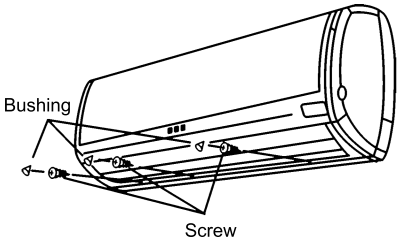

Pull slowly on the bottom of the front panel, making sure the air outlet does not touch the outlet grille.

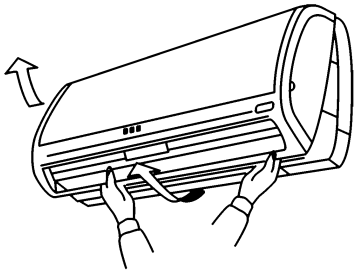

Then lift the panel slightly to release the combined parts (three) from the top of the front panel.

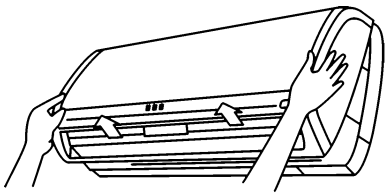

Make sure there are no gaps between the front panel and the unit casing when fitting.

NOTE

Gaps between the front panel and the unit casing may lead to air or condensate leaks.

Removal of the front panel (only RPK-(2.5-4.0)FSN2M)

Remove the right side cover to connect the refrigerant pipes and wiring and to check the drainage water flow.

CAUTION

Completely cover the front panel with a sheet of plastic to protect it during installation work.

Remove the three bushings and the screws.

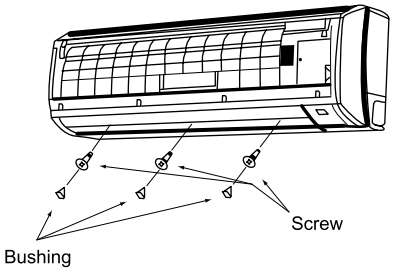

Pull slowly on the bottom of the front panel, making sure the air outlet does not touch the outlet grille.

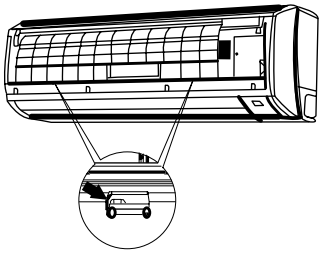

Then lift the panel slightly to release the combined parts (four) from the top of the front panel.

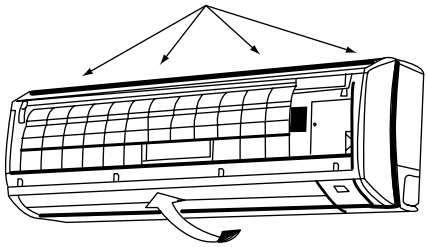

Make sure there are no gaps between the front panel and the unit casing when fitting.

NOTE

Gaps between the front panel and the unit casing may lead to air or condensate leaks.

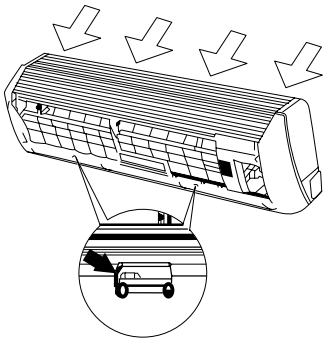

10.8.3 Removal of the right cover (only RPK-(2.5-4.0)FSN2M)

Remove the screw securing the right cover.

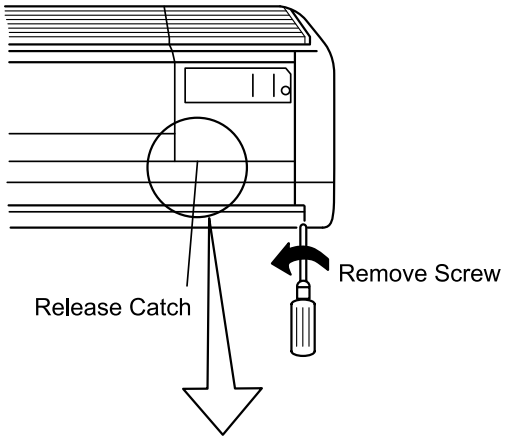

Open the lock on the lower left-hand side of the right cover. Pull gently on the right cover and release the lock.

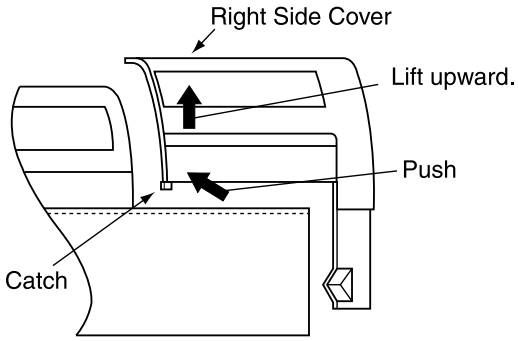

Remove the lower side of the right cover and release the upper side lock.

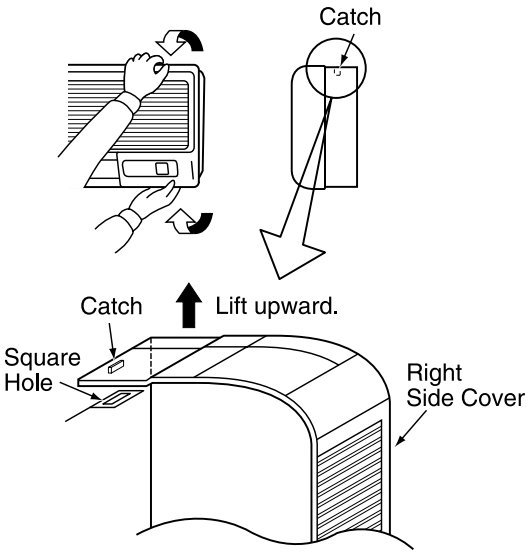

10.8.4 Removal of the suction air grille (only RPK-(2.5-4.0)FSN2M)

Remove the front panel as indicated in Section *Removal of the front panel, see on page 341*.

Remove the screw from the left cover.

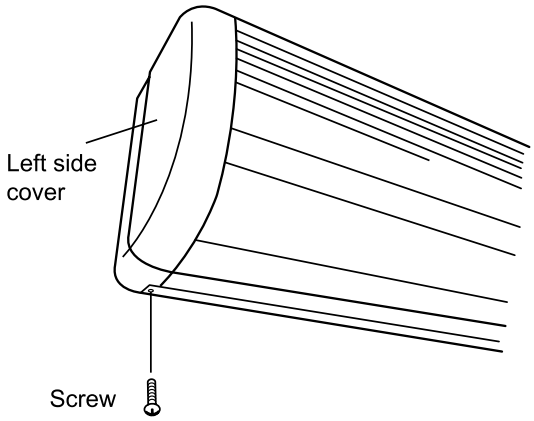

Release the latches -A- and -B- on the left cover.

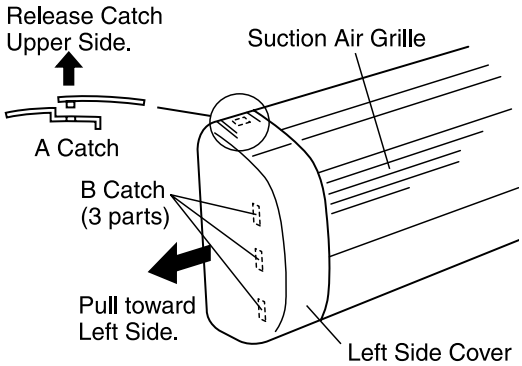

Remove the four screws from the suction air grille.

Lift the suction grille slightly.

Remove the suction grille.

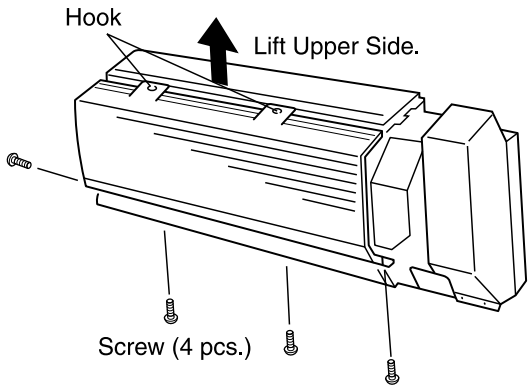

10.8.5 Removal of the automatic louver motor

Remove the side panel in line with the instructions given in chapter *Removal of the front panel, see on page 341*.

Remove the electrical box panel as indicated in chapter *Remove the electrical box panel, see on page 346*.

Remove the screws from the AS motor assembly.

Remove the AS motor horizontally.

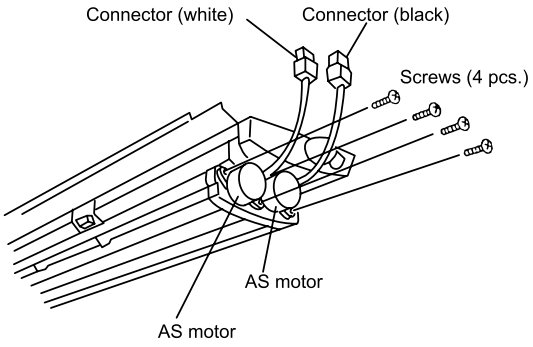

CAUTION

- ***The AS motor separates from the louver shaft.***
- ***Be particularly careful not to damage the AS motor.***

Remove the louvers.

To refit the AS motor, insert the motor shaft into the D-shaped hole in the louver and then follow the removal operations in reverse order.

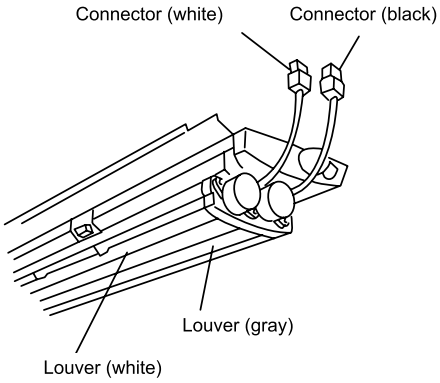

10.8.6 Remove the electrical box panel

RPK-(1.0-2.0)FSN(H)2M:

Nº	Part
1	Connector for the AS (CN17) motor
2	Electrical box panel
3	Connector for the remote control (CN13).
4	Connector for the fan motor (CN29)
5	Terminal board
6	Earthing screw

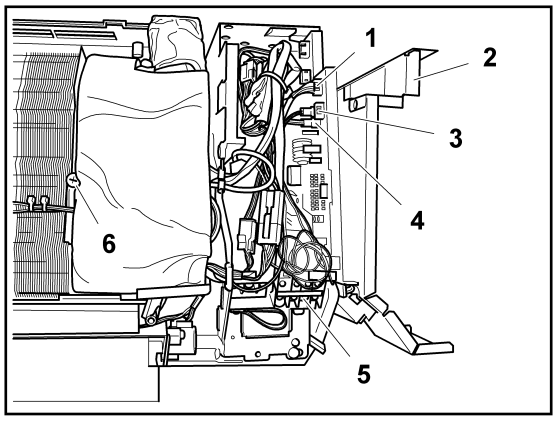

Remove the front panel as indicated in Section *Removal of the front panel, see on page 341* of this chapter.

NOTE

Remove the right-hand cover instead of the front panel on RPK-(2.5-4.0)FSN2M models.

Remove the set screw from the electrical box panel.

Remove the power supply wiring and wiring connection between the indoor and outdoor unit.

Remove the conductor wires of the valve, the fan motor, the liquid and gas piping thermistors, the AS motor (X2) and the remote control from the connectors. Also remove the earthing wires (X2) from the heat exchanger.

Remove the discharge air thermistor from the support secured to the air outlet and suction air vertical louver.

Pull the electrical box forwards after removing the two screws securing it.

To fit the electrical box, position the box, connect the connectors and carry out the box removal procedure in reverse order.

RPK-(2.5-4.0)FSN2M:

NOTE

Check that the screw measurements are different on RPK-(2.5-4.0)FSN2M models:

- ***A: M4x8.***
- ***B: M4x10.***

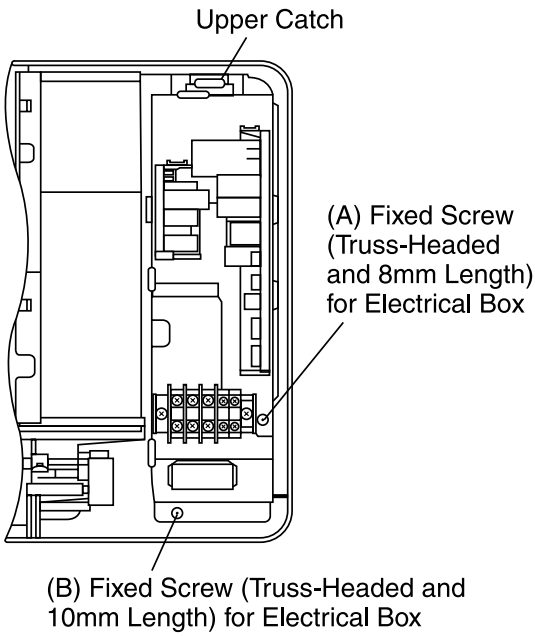

10.8.7 Removal of the thermistors from the liquid and gas pipes and the inlet air and outlet air thermistors

Removal of the thermistors from the liquid and gas pipes

RPK-(1.0-2.0)FSN(H)2M:

Remove the front panel in line with the instructions given in section*Removal of the front panel, see on page 341*.

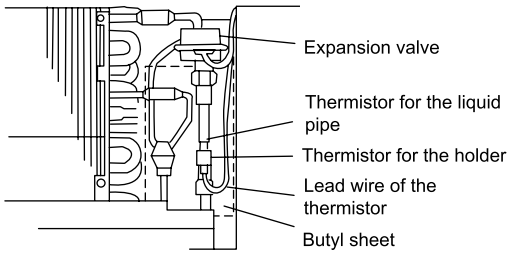

NOTE

Remove the right-hand cover instead of the front panel on RPK-(2.5-4.0)FSN2M models.

Remove the electrical box panel as indicated in section *Remove the electrical box panel, see on page 346*.

Remove the butyl sheet protecting the liquid pipe thermistor and remove the support.

Remove the butyl sheet protecting the gas pipe thermistor, cutting the plastic tie and the rest of the tapes. Then remove the thermistor from the support.

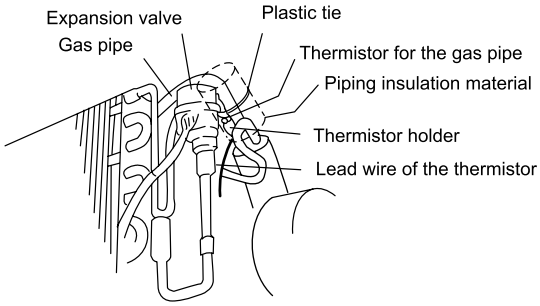

RPK-(1.0-2.0)FSH(H)2M:

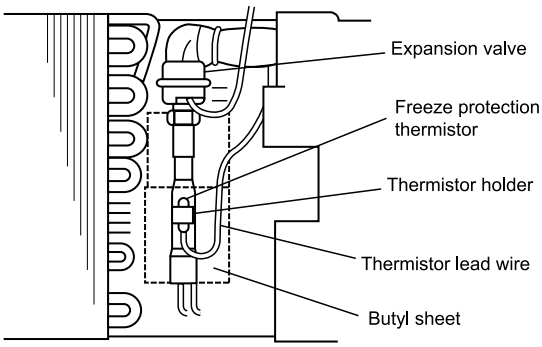

RPK-(2.5-4.0)FSN2M:

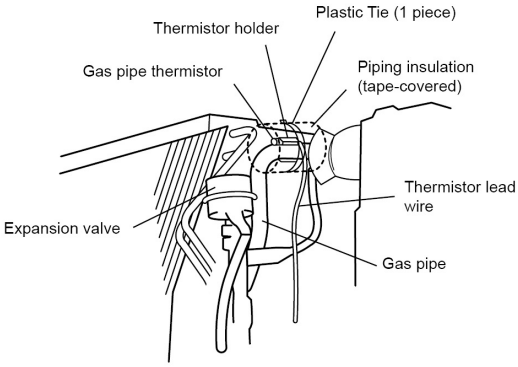

Removal of the inlet and outlet air thermistors on RPK-(1.0-2.0)FSH(H)2M

Remove the outlet air thermistor from the vertical louver support and from the right-hand side hook on the air outlet.

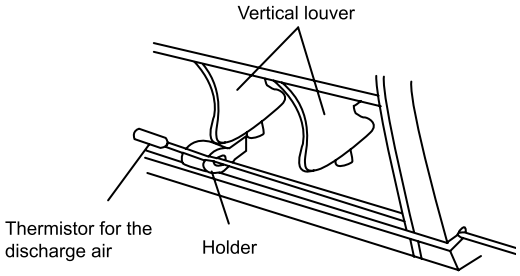

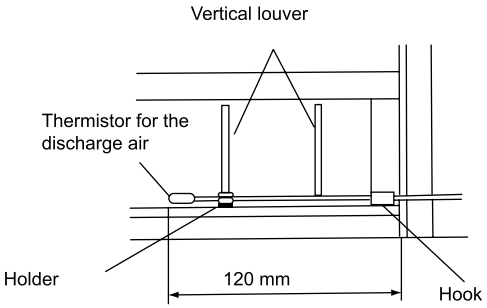

Remove the tie securing the inlet air thermistor to the right-hand side of the electrical box.

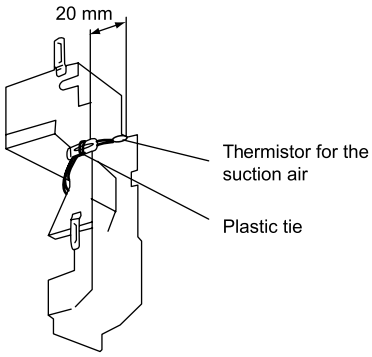

Removal of the inlet and outlet air thermistors on RPK-(2.5-4.0)FSN2M

Remove the outlet air thermistor. Remove the plastic tie securing the discharge thermistor and remove the thermistor from the frame.

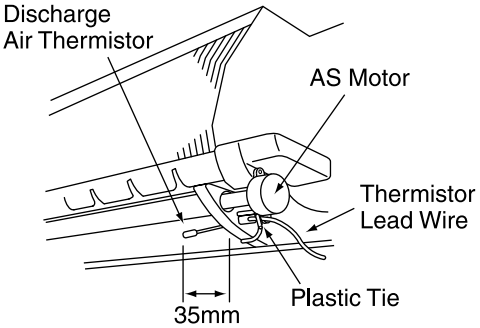

Remove the tie securing the outlet air thermistor. Cut the aluminium tape not securing the right-hand side of the electrical box.

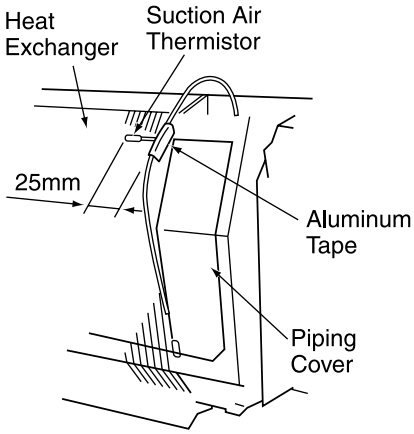

10.8.8 Removal of the printed circuit board (PCB)

RPK-(1.0/1.5)FSN(H)2M

Nº	Part
1	Spacer
2	Set screw for the earthing wire
3	Set screw for the receiver
4	Receiver PCB
5	Receiver cover fixture
6	Operating PCB
7	Connector for the operating PCB
8	Connector for the receiver part

Remove the electrical box as indicated in section *Remove the electrical box panel, see on page 346*.

Remove the connector from the control PCB.

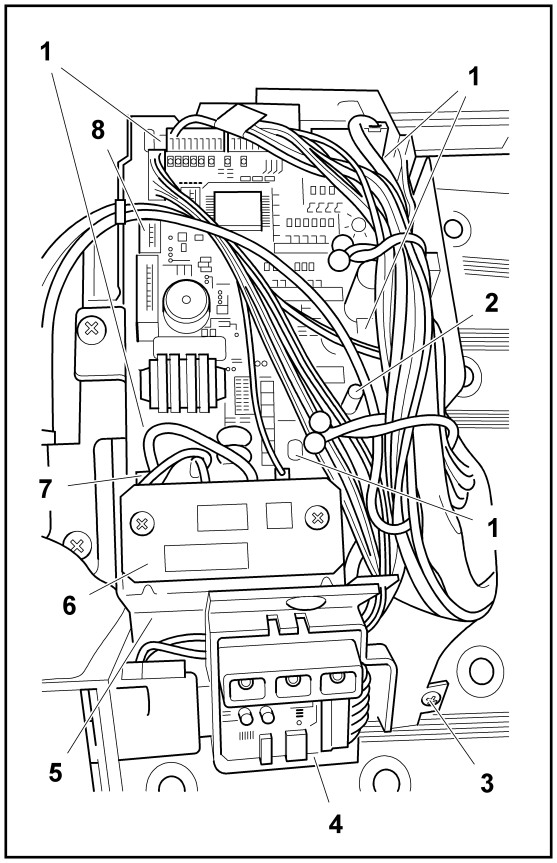

NOTE

The expansion valve connector cannot be removed.

Nº	Part
1	Spacer

Remove the 5 spacers and the control PCB

Unlock the spacer and lift the power supply PCB

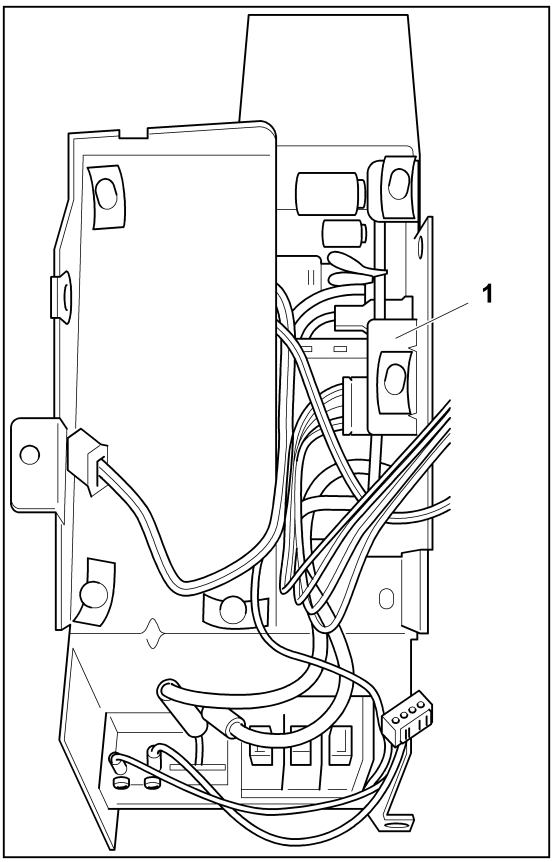

NOTE

The spacer does not have to be fully removed.

Nº	Part
1	Side cover lock
2	Side cover
3	Side cover lock

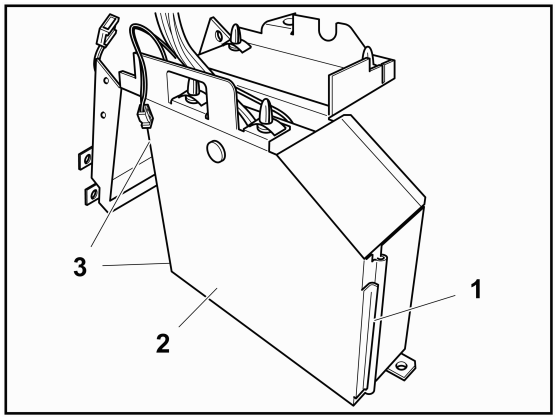

Release the three locks on the side cover and remove the electrical box.

NOTE

Use a screwdriver for easier removal.

Nº	Part
1	Power supply printed circuit board
2	Release sheet

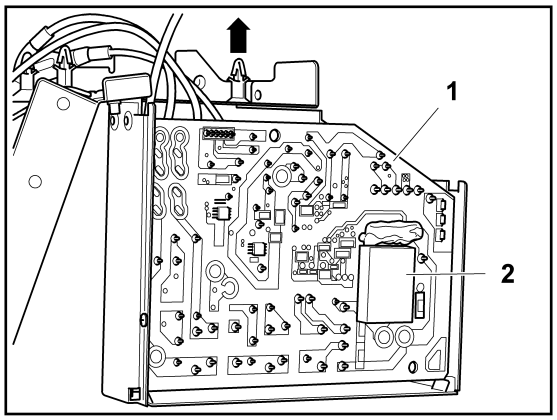

Remove the power supply PCB and disconnect the electrical box.

After replacing the power supply PCB, re-insert it following the removal procedure in reverse order.

When the heat release sheet is released on inserting the PCB, fit the end of the areas covered in silicone and the end of the sheet.

RPK-2.0FSN2M

Nº	Part
1	Earthing wire
2	Inlet thermistor
3	Receiver part
4	Electrical box cover
5	Screw

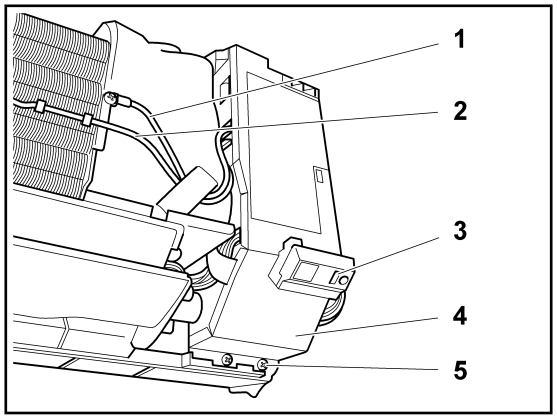

Remove the front panel as indicated in section *Removal of the front panel, see on page 341*.

Removal a screw from the electrical box cover.

Remove the connector from the main PCB.

Nº	Part
1	Board base 2
2	Hook
3	Main PCB
4	Board base 1
5	Terminal board

Remove the two hooks from base 1 of the PCB to which the PCB is attached. Lift base 1 and remove the remaining connectors.

First remove the heat exchanger earthing cable and remove the two aforementioned connectors and a hook from base 2 of the PCB. Lift base 2 and remove the remaining connectors.

After replacing the PCB, insert the connectors back into the PCB following the procedure in reverse order. Be careful not to catch any wire between the components, with incorrect or barely visible connections.

Also make sure you do not bend any part of the PCB with the components, such as the rings or the connectors.

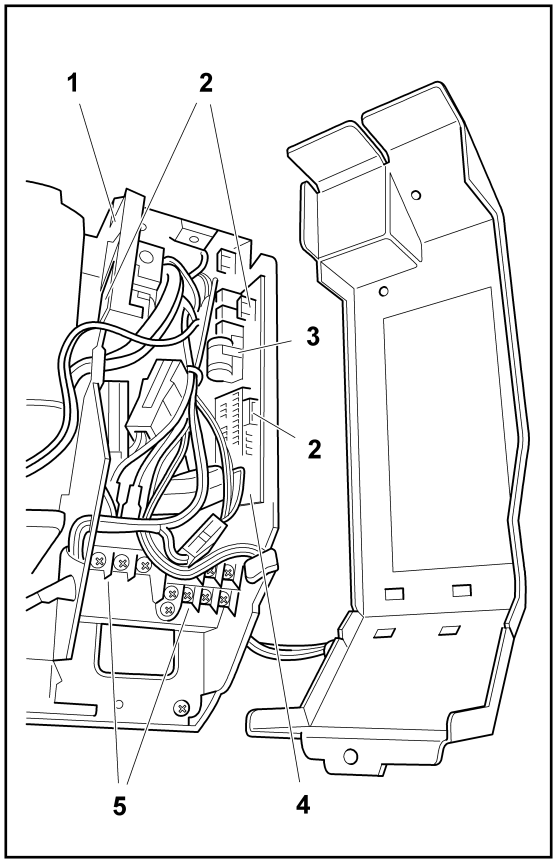

RPK-(2.5-4.0)FSN2M

Nº	Part
1	Electrical box cover screw.
2	Electrical box cover
3	Electrical box cover screw
4	Terminal board cover screw
5	Terminal board cover

Remove the front panel as indicated in section *Removal of the front panel, see on page 341*.

Remove a screw from the terminal board cover and remove it.

Removal two screws from the electrical box cover and remove it.

After replacing the PCB, fit the main PCB. To connect the main PCB, first insert it into the groove in the rear spacers.

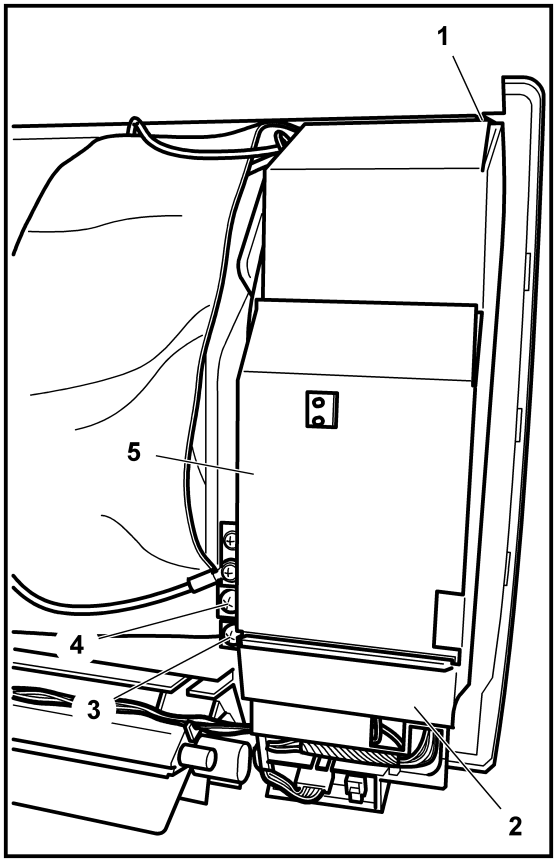

Nº	Part
1	Electrical box fixture
2	Electrical box fixture screw
3	Terminal board fixture plate
4	Terminal board fixture screw

Remove the 2 screws from the electrical box fixture to remove it.

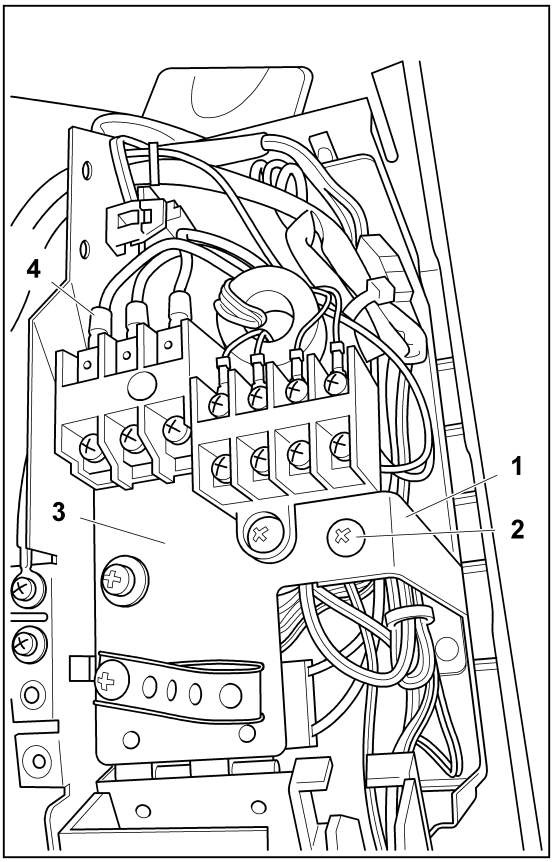

Nº	Part
1	Terminal board fixture plate

Remove a screw from the terminal board fixture plate and remove it.

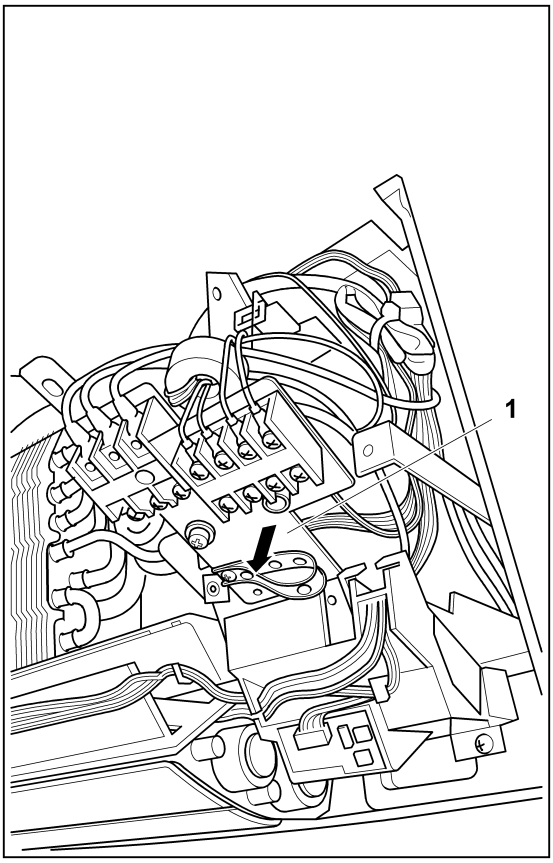

Nº	Part
1	Three front spacers

Remove the thermistor from the main PCB for outlet and inlet liquid, external transmission, remote control, power supply, external I/O, automatic louver, screen PCB, fan motor, receiver PCB and expansion valve connector.

Detach the three front spacers from the main PCB and remove the PCB from the electrical box.

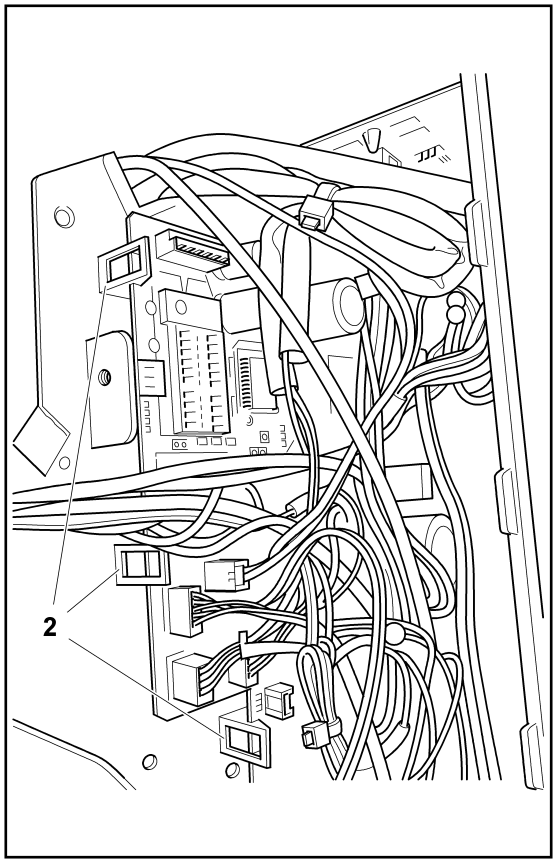

Nº	Part
1	The hook is released by turning this part in the direction of the arrow
2	Front spacers

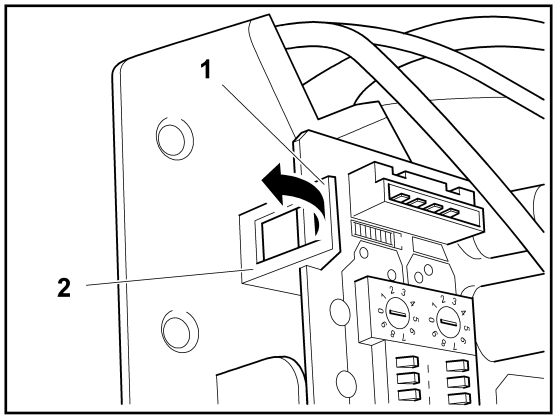

Nº	Part
1	Two rear spacers

Attach the three front spacers and secure the main PCB.

Insert the PCB connectors following the removal procedure in reverse order. Fit the terminal board fixture plate, the terminal board fixtures, the electrical box fixtures and covers and the terminal board cover.

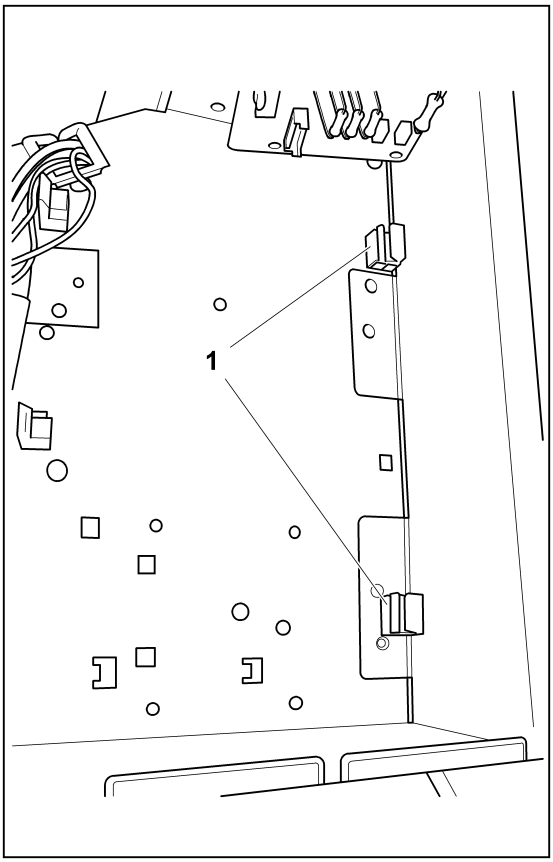

CAUTION

Be careful not to catch any wire between the components or with incorrect or barely visible connections.

10.8.9 Removal of the heat exchanger

Remove the front panel as indicated in Section *Removal of the front panel, see on page 341*.

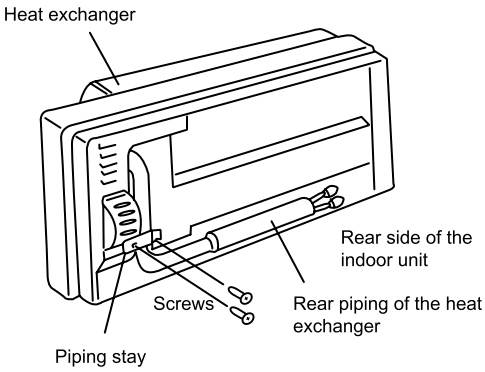

NOTE

Remove the right-hand cover instead of the front panel on RPK-(2.5-4.0)FSN2M models.

Remove the electrical box as indicated in section *Remove the electrical box panel, see on page 346*.

Remove the drain pan as indicated in section *Removal of the drain pan, see on page 358*.

Remove the fixture from the piping at the rear of the heat exchanger.

Release the attachment securing the left of the heat exchanger and remove the screw securing the exchanger.

Remove the screw securing the heat exchanger and release the hook securing the right of the exchanger.

Lift the heat exchanger. Pull the rear heat exchanger piping out from the square hole by pulling the top of the exchanger forwards and removing the exchanger.

To fit the heat exchanger, carry out the removal procedure in reverse order.

NOTE

After fitting the heat exchanger, make sure the hooks and screws on the left and right sides are correctly connected.

RPK-(1.0-2.0)FSN(H)2M

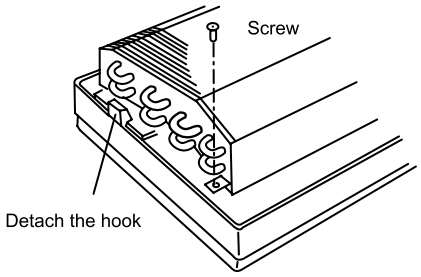

RPK-(1.0-2.0)FSN(H)2M

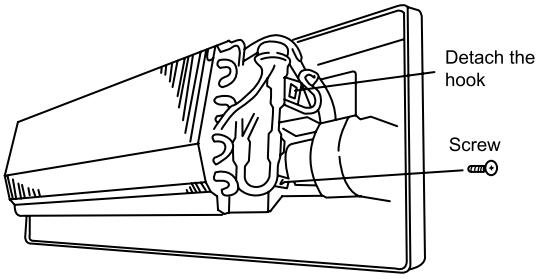

RPK-(1.0-2.0)FSN(H)2M

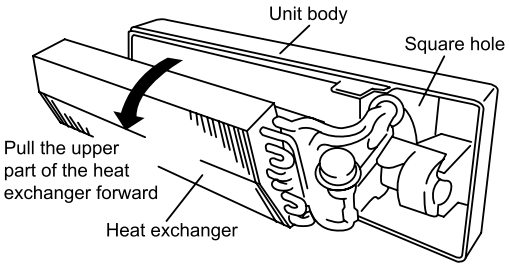

RPK-(2.5-4.0)FSN2M

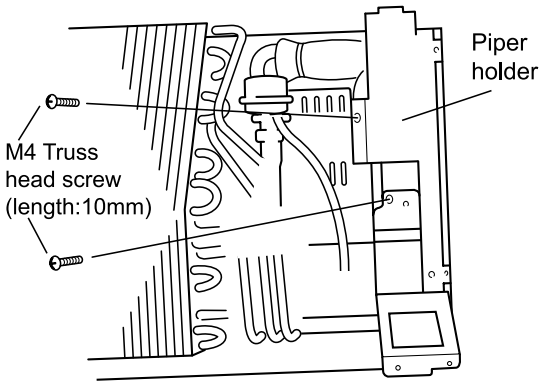

RPK-(2.5-4.0)FSN2M

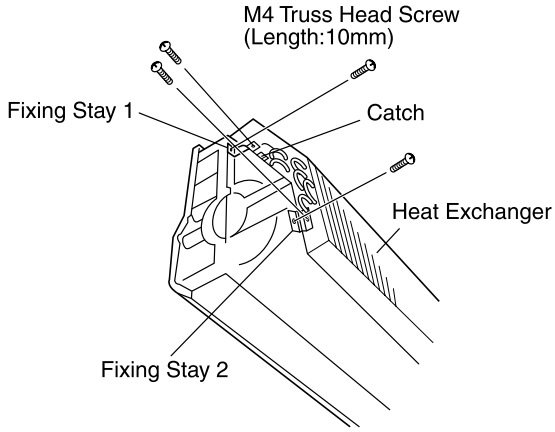

RPK-(2.5-4.0)FSN2M

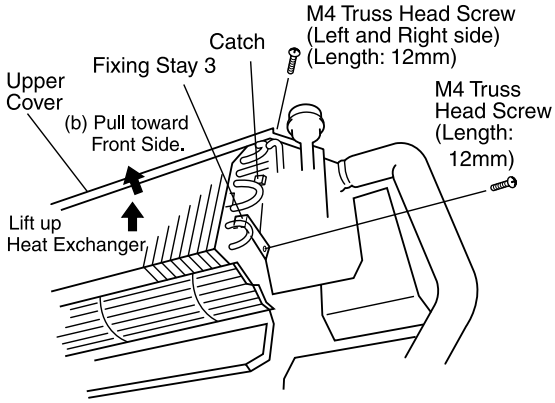

10.8.10 Removal of the AS motor

Nº	Part
1	AS motor
2	AS motor set screw

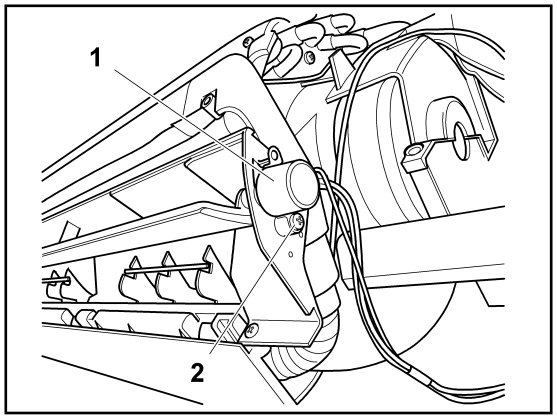

Remove the front panel as indicated in Section *Removal of the front panel, see on page 341*.

Remove the electrical box as indicated in section *Remove the electrical box panel, see on page 346*.

Remove the screws securing the AS motor.

Remove the AS motor sideways to remove it from the louver shaft.

To fit the AS motor, insert the motor shaft into the D-shaped grooves in the louver, following the removal procedure in reverse order.

NOTE

- ***RPK-(1.0/1.5)FSN(H)2M: 1 screw.***
- ***RPK -2.0FSN2M: 3 screws.***
- ***RPK-(2.5/4.0)FSN2M: 4 screws.***

MODELS 2.0 HP

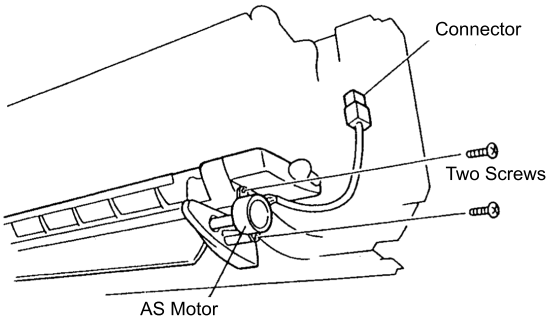

RPK-(1.0-2.0)FSN(H)2M

Nº	Part
1	AS motor
2	AS motor set screw

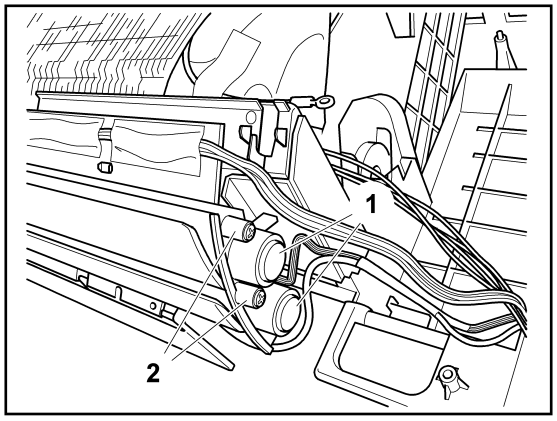

10.8.11 Removal of the drain pan

RPK-(2.5-4.0)FSN2M:

Remove the front panel as indicated in Section *Removal of the front panel, see on page 341*.

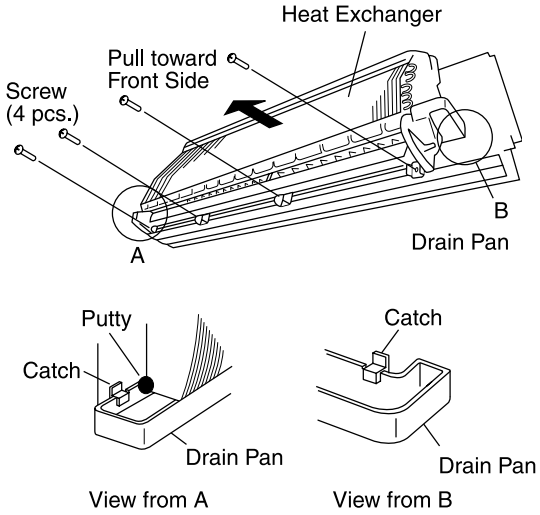

NOTE

Remove the right-hand cover instead of the front panel on RPK-(2.5-4.0)FSN2M models.

Remove the electrical box as indicated in section *Remove the electrical box panel, see on page 346*.

NOTE

This is not necessary on RPK-(2.5-4.0)FSN2M models.

Remove the drain pan from the unit by releasing the hooks on the left side of the pan and releasing the hook (C) while pulling the right side of the air panel forwards.

NOTE

Remove the screws securing the drain pan to the bottom and remove the drain pan on RPK-(2.5-4.0)FSN2M models.

To fit the drain pan, carry out the removal procedure in reverse order.

NOTE

Make sure the hooks are correctly positioned.

RPK-(1.0-2.5)FSN(H)2M

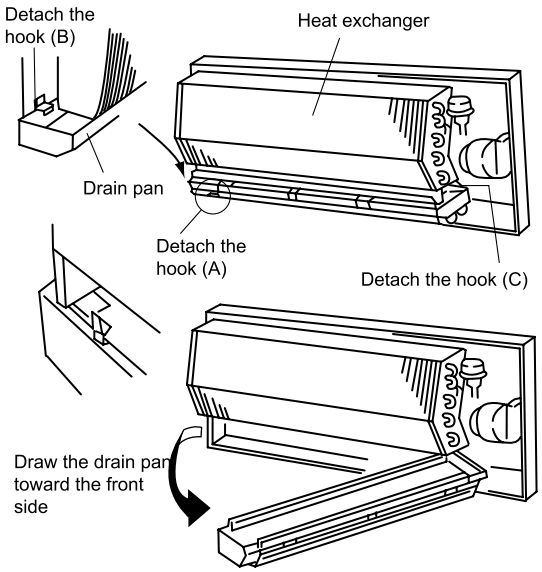

RPK-(2.5-4.0)FSN2M

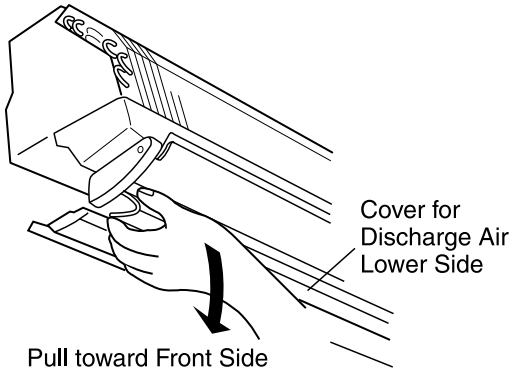

10.8.12 Removal of the fan motor

Removal of the fan motor (only RPK-(1.0-2.0)FSN(H)2M)

Remove the heat exchanger as indicated in section *Removal of the heat exchanger, see on page 355*.

Remove the support securing plate by pushing the button on both sides of the plate towards the inside and releasing the hooks.

Remove the supports securing the fan motor. To remove the motor support, loosen the screw securing the motor shaft and the fan.

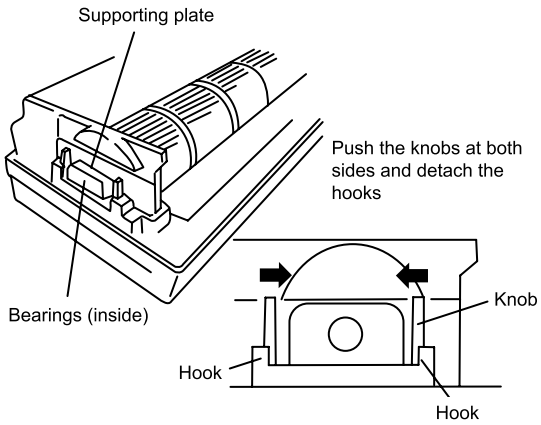

Pull the fan to the left while lifting the fan support slightly. Then remove the fan and the fan motor.

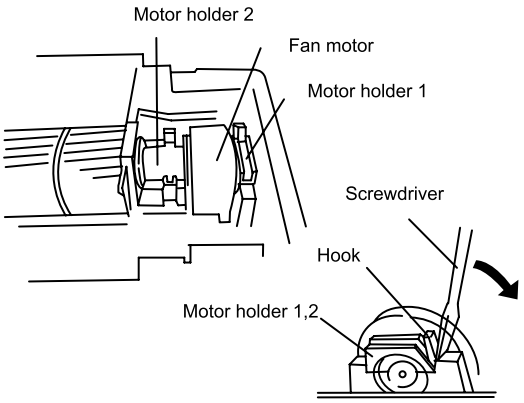

To fit the fan and the fan motor, carry out the removal procedure for both components in reverse order.

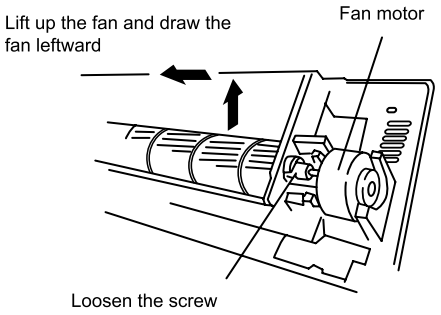

Secure the fan in position with a gap of 8 mm between the left end (support side) and the partition plate.

Secure the fan motor with the conductor wire outlet in the position shown in the figure.

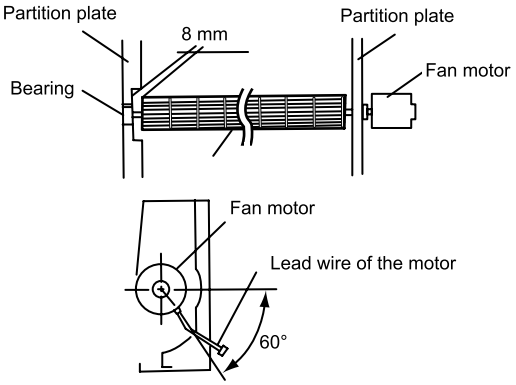

Removal of the fan motor (only RPK-(2.5-4.0)FSN2M)

Remove the right-hand cover.

Remove the screw from the left cover.

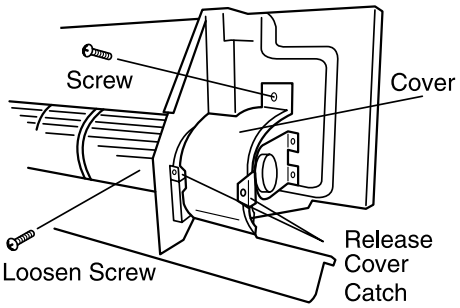

Release the hook from the left cover.

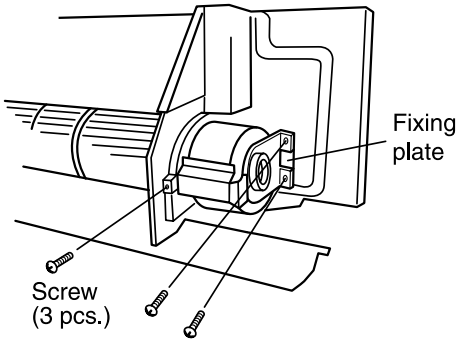

Remove the four screws from the suction air grille.

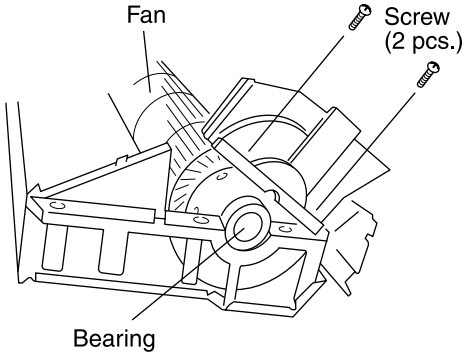

Lift the suction air grille slightly.

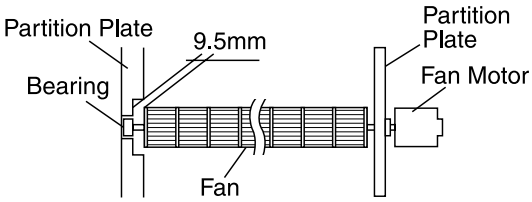

Lift the suction grille slightly to remove it by releasing the hooks.

Remove the suction grille.

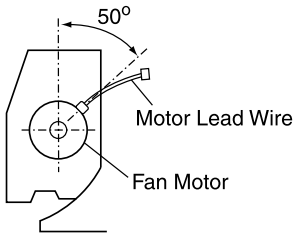

10.8.13 Removal of the electronic expansion valve

RPK-(1.0-2.0)FSN(H)2M

Remove the front panel as indicated in Section *Removal of the front panel, see on page 341*.

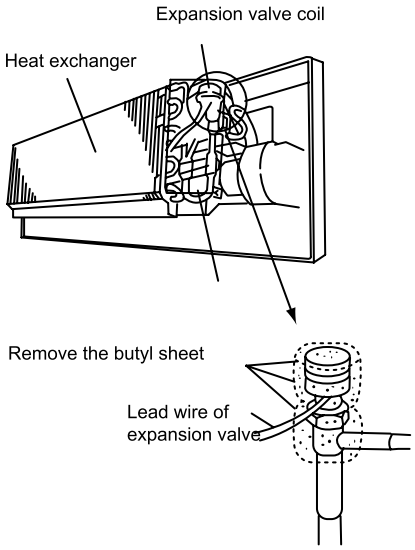

NOTE

Remove the right-hand cover instead of the front panel on RPK-(2.5-4.0)FSN2M models.

Remove the electrical box as indicated in section *Remove the electrical box panel, see on page 346*.

Remove the sheet from the piping surface, the valve coil and the valve body.

NOTE

The butyl sheet is attached around the heat exchanger piping, the electronic expansion valve and the inlet and outlet piping of the electronic expansion valve.

Prepare two wrenches. Secure the body of the valve with one wrench and loosen the nut with the other, turning it anti-clockwise until the transmission part is released and can be removed.

NOTE

Do not hold onto the motor when loosening the nut with a wrench. The base of the transmission part could become loose and break.

Prepare the new transmission part with the position of the transmission wheel already adjusted.

NOTE

- ***Pay attention to removal while replacing and prevent dust and foreign particles, etc. from entering it (the exposed part during removal is the mechanical part of the valve).***
- ***Do not damage the valve joint with tools.***

Fit the transmission part to the body of the valve, hold onto both and make sure their axes coincide before fitting the nut to the valve body bolt.

Tighten the nut by hand and apply the torque value: 12 Nm - 15 Nm.

NOTE

- ***Do not apply significant force to the motor, such as rotational torque or bending load, while holding it with your hand and tightening the nut.***
- ***The direction of the eccentric part of the motor is fitted in the same way as the expansion valve. Although the motor is facing away from the piping connections on the valve body, modification of this direction does not affect the valve open/close function. Therefore, it is not necessary to adjust the direction of the motor if the motor position moves in the direction of rotation after replacement, as shown in the figure.***
- ***However, check that the motor direction for the electronic expansion valve coil does not touch another pipe or the side plate of the electrical box.***

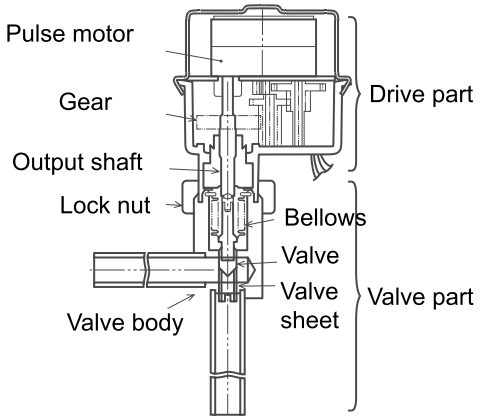

Adjustment of direction is not required.

(However, pay attention not to touch the pipes or the drain pan.)

Direction of drive part

Once replaced, fit the electronic expansion valve in the reverse manner as indicated for the removal process.

RPK-(2.5-4.0)FSN2M

Position the butyl sheet, attaching it correctly to the valve.

NOTE

Check that the cables do not touch the fan duct after installation is complete.

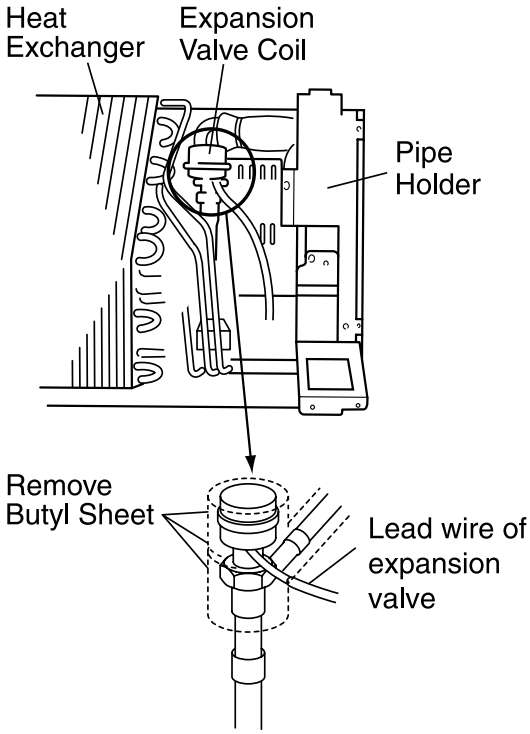

10.9 RPF(I)- (1.0-2.5)

10.9.1 Removal of the air inlet grille

RPF-(1.0-2.5)FSN2E

Loosen the screws on the securing plate of the right part of the grille then remove the plates.

Press the button on both sides of the grille in the direction indicated by the arrow. The grille can be opened at a 30° angle.

Remove the air inlet grille from the hinges.

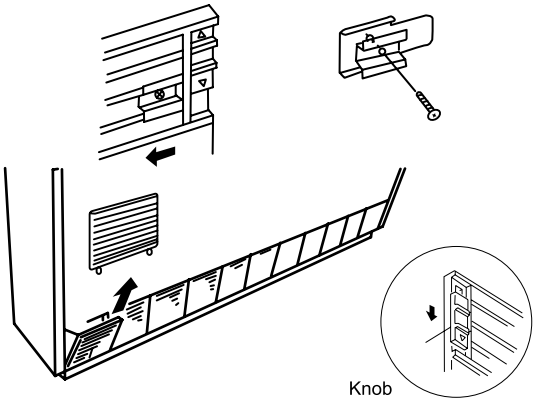

10.9.2 Removal of the air filter

RPF-(1.0-2.5)FSN2E

The air filter is located inside the air inlet grille. Remove the air inlet grilles as indicated in section *Removal of the air inlet grille, see on page 364*.

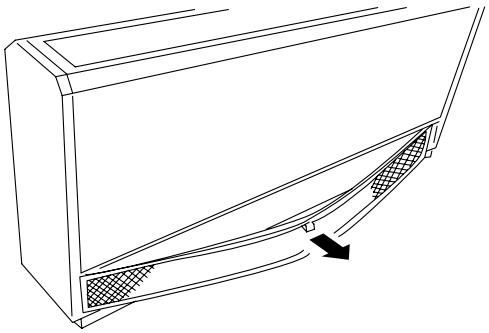

Remove the filter by pulling the filter button.

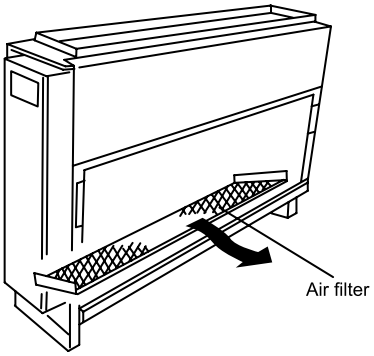

10.9.3 Removal of the air outlet grille

RPF-(1.0-2.5)FSN2E

Remove the screw holding the securing plate.

Open the upper panel so that it is vertical.

Slide and remove the air outlet grille.

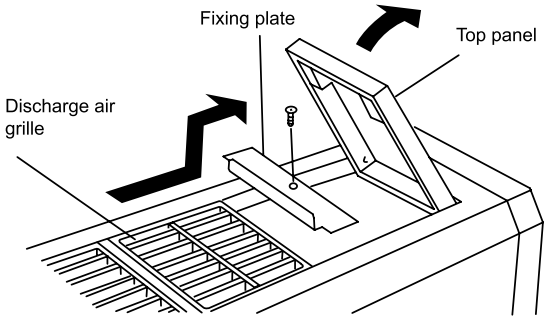

10.9.4 Removal of the front panel

Remove the central panel air filter in line with the instructions given in chapter *Removal of the air filter, see on page 364*.

Remove the screws from the lower part of the front panel.

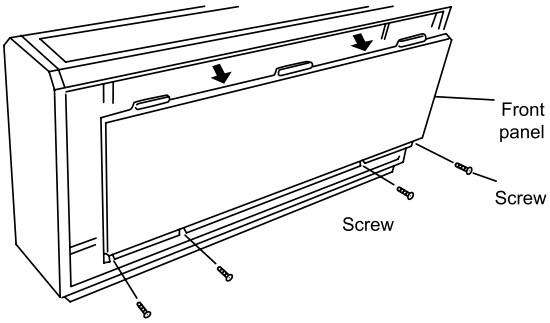

NOTE

- ***RPF-(1.0-2.5)FSN2E: 4 screws.***
- ***RPFI -1.0FSN2E: 9 screws.***
- ***RPFI -1.5FSN2E: 10 screws.***

Remove the 11 set screws and remove the front panel.

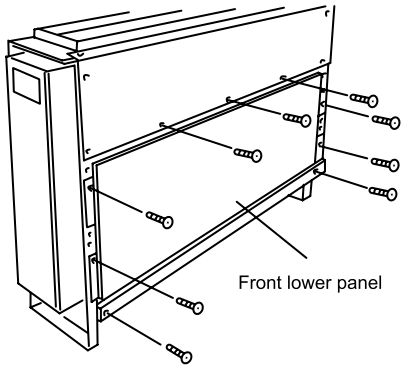

10.9.5 Removal of the fan motor

Remove the air inlet grille as indicated in chapter *Removal of the air inlet grille, see on page 364*.

Remove the air filter as indicated in section *Removal of the air filter, see on page 364*.

Remove the four set screws from the fan motor assembly plate and remove it.

Disconnect the wiring from the fan motor connector. Remove the wiring board and the connector.

Remove the cover by pressing the four attachment points inwards.

Loosen the bolts using a wrench.

Remove the securing plate.

Remove the fan motor by sliding it backwards.

NOTE

Be careful when releasing the fan motor, as it could fall.

10.9.6 Removal of the printed circuit board (PCB)

Remove the air inlet grille as indicated in section *Removal of the air inlet grille, see on page 364*.

Remove the air filter as indicated in section *Removal of the air filter, see on page 364*.

Remove the front panel as indicated in Section *Removal of the front panel, see on page 365*.

Remove the side panel, removing the 3 set screws and pulling the panel downwards.

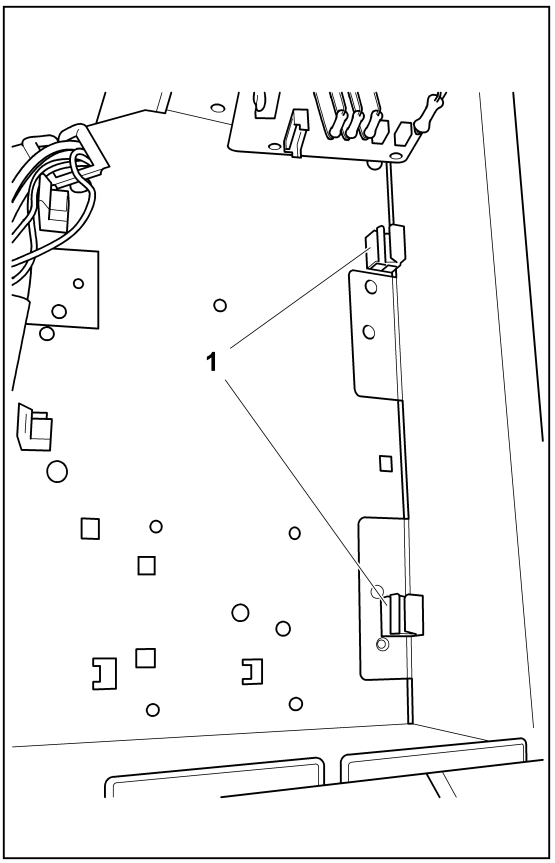

Remove the panel from the electrical box after removing the four set screws.

Remove the 2 set screws from the electrical box and release the attachment from the top of the box. Turn the electrical box at a 90° angle.

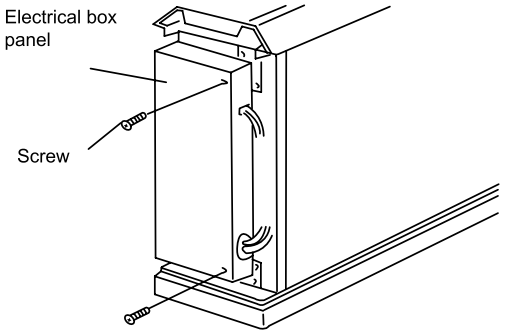

Press the four attachment points of the PCB using long-tipped pliers and placing a finger next to the hole in the PCB before removing the PCB.

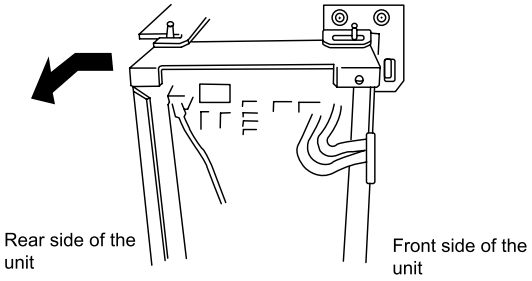

CAUTION

- ***Do not touch the electrical components of the PCB.***
- ***Do not apply force to the PCB, as this could damage it.***
- ***Pay special attention to the position of the connectors on the PCB. An incorrect position during installation may damage the PCB.***

10.9.7 Removal of the thermistors from the liquid and gas piping

Remove the air inlet grille as indicated in section *Removal of the air inlet grille, see on page 364*.

Remove the air filter as indicated in section *Removal of the air filter, see on page 364*.

Remove the front panel as indicated in Section *Removal of the front panel, see on page 365*.

Remove the side panel, removing the 3 set screws and pulling the panel downwards.

Disconnect the wiring from the thermistor and remove the thermistor.

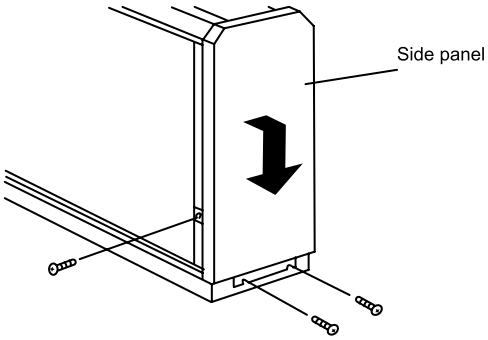

10.9.8 Removal of the fan motor

Remove the air filter in line with the instructions given in chapter *Removal of the air filter, see on page 364*.

Remove the front panel in line with the instructions given in chapter *Removal of the front panel, see on page 365*.

Remove the motor in line with the instructions given in chapter *Removal of the fan motor, see on page 365*.

10.9.9 Removal of the printed circuit board (PCB)

Remove the front panel in line with the instructions given in chapter *Removal of the front panel, see on page 365*.

Remove the PCB following the instructions given in chapter *Removal of the printed circuit board (PCB), see on page 367*.

10.9.10 Removal of the thermistors from the liquid and gas piping

Remove the air filter in line with the instructions given in chapter *Removal of the air filter, see on page 364*.

Remove the front panel in line with the instructions given in chapter *Removal of the front panel, see on page 365*.

Remove the thermistors in line with the instructions given in chapter *Removal of the thermistors from the liquid and gas piping, see on page 367*.

10.10 KPI

10.10.1 System description

An example of the system is shown below. Make sure the system has been checked by a HITACHI distributor.

Exchange mode

The air returning from the indoor part passes through the total heat exchanger unit and is expelled outdoors.

The outdoor air is supplied through the total heat exchanger.

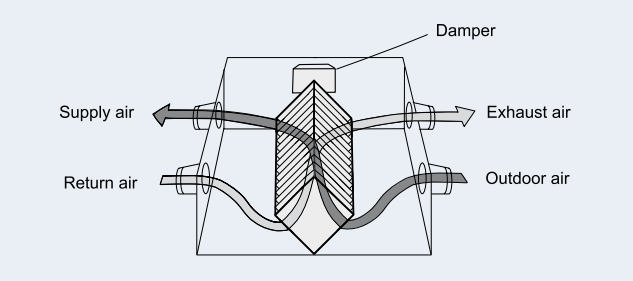

Ventilation bypass mode

The air from indoors is expelled without heat exchange.

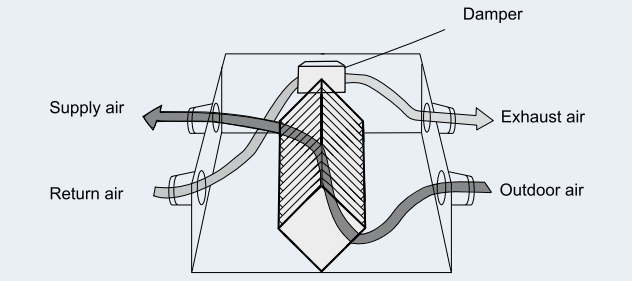

Automatic selection mode

(Factory-set). The operating mode is selected automatically according to the temperature conditions (outdoor, indoor and set).

10.10.2 Structure and part names

KPI-(252-2002)(E/H)2E

Nº	Part
1	Damper
2	Air conductor connection
3	Fans
4	Electrical box
5	Service door
6	Filters
7	Heat exchanger
8	Unit hangers

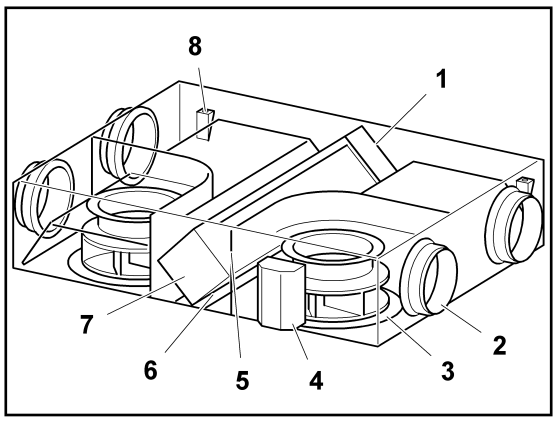

KPI-3002H2E

Nº	Part
1	Heat exchanger
2	Unit hangers
3	Electrical box
4	Service door
5	Air conductor connection
6	Filters
7	Fans

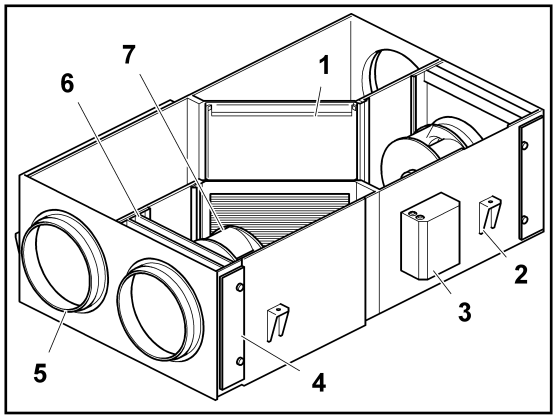

10.10.3 Filter maintenance

Preliminary procedures

Turn off all power supply switches before starting maintenance work.

Wait 5 minutes after stopping the unit before starting the cleaning procedure.

Do not start the system without the air filter to avoid blockages in the total heat exchanger.

DANGER

Wear gloves to avoid injuries when handling the filter.

NOTE

- ***Clean the heat exchanger unit once or more every two years.***
- ***Clean the air filter more than once a year.***

KPI-(252-2002)(E/H)2E

Pull the hinges back.

Open and remove the service cover.

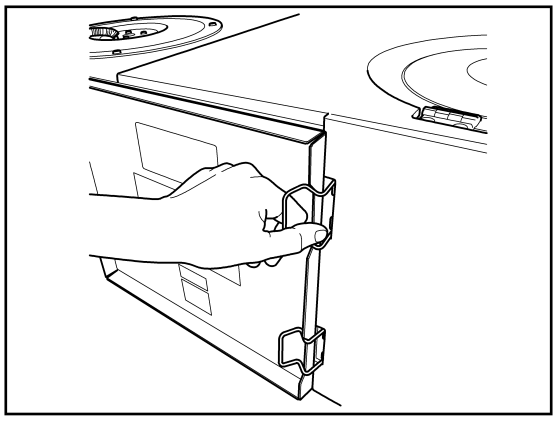

Remove the air filters located at the bottom left and bottom right, close to the heat exchanger unit.

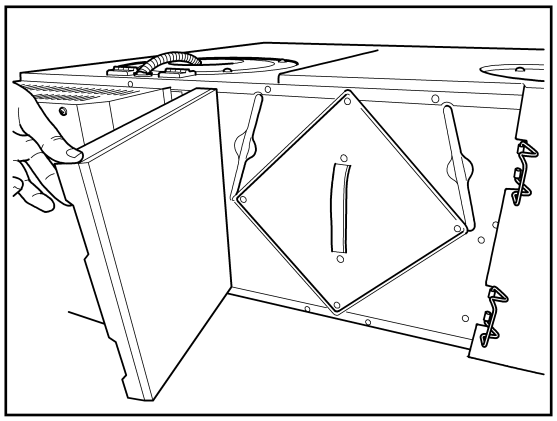

Use a vacuum cleaner to suck up any dust.

Dissolve a little neutral soap in cold or warm water to clean the dirt.

Place the filters in the soapy water to clean them.

Allow the filters to dry.

Fit the filter.

Close the service cover.

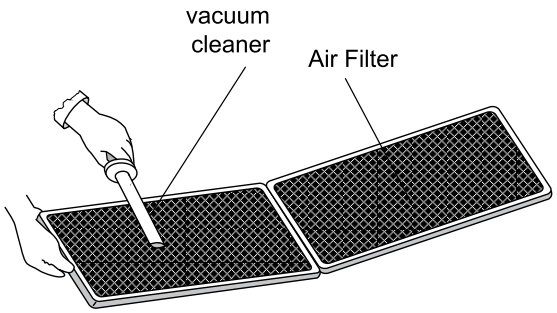

Press the RESET switch on the remote control.

CAUTION

- ***Never wash filters in hot water.***
- ***Do not scrub the filters.***
- ***Do not expose the filters to flames.***

NOTE

- ***R15 and R19 type filters can only be washed to a certain point.***
- ***R17, R50 and R20 filters can be washed thoroughly.***
- ***R series filters can be washed in warm water (30-40 °C) with neutral soap. The filters can be dried on a flat surface. They can also be cleaned using compressed air, applying it in the opposite direction to the filter air flow.***

◆ KPI-3002H2E

KPI-3002H2E models fit two air filters which have the same maintenance procedure.

Open the filter access door.

Remove the filters.

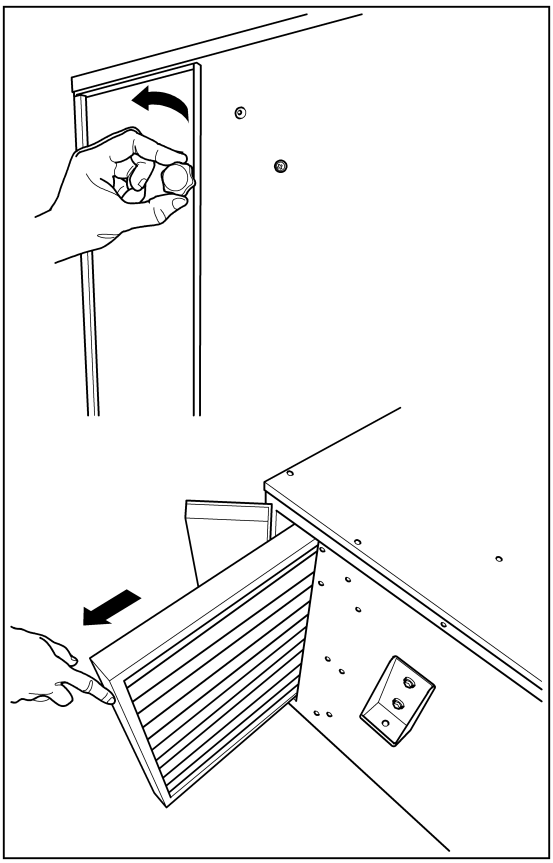

Use a vacuum cleaner -A- to suck up any dust of the filter -B-.

Dissolve a little neutral soap in cold or warm water to clean the dirt.

Place the filters in the soapy water to clean them.

Allow the filters to dry.

Fit the filter.

Close the service cover.

Press the RESET switch on the remote control.

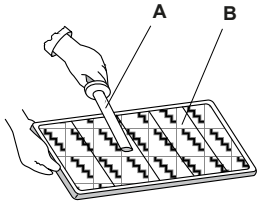

10.10.4 Cleaning energy recovery ventilation unit elements

NOTE

Clean the element once or more every two years to prevent the air flow and efficiency from dropping.

CAUTION

- ***Do not wash the element with water under any circumstances.***
- ***Do not use the hard nozzle on the vacuum cleaner, as this could damage the exposed parts of the heat exchanger.***

◆ KPI-(252-2002)(E/H)2E

Pull back the hinges, open the service cover and remove the cover.

Hold onto the handle. Remove the two total heat exchanger elements from the main unit.

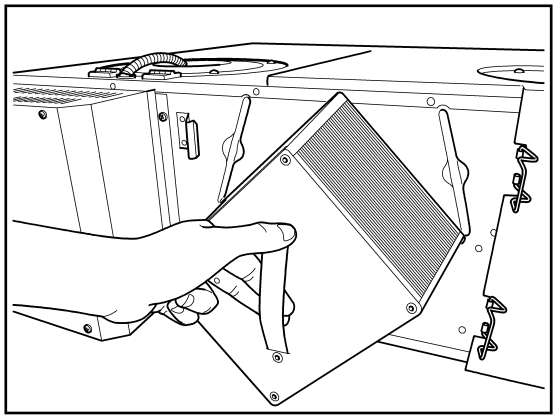

KPI-(252-2002)E2E

Use a vacuum cleaner to suck up any dust and dirt from the exposed surfaces of the total exchanger elements.

Fit a nozzle with a brush to a vacuum cleaner to carry out this task.

Clean the elements by brushing the exposed surfaces gently.

Fit the element.

Fit the air filter.

Close the service cover.

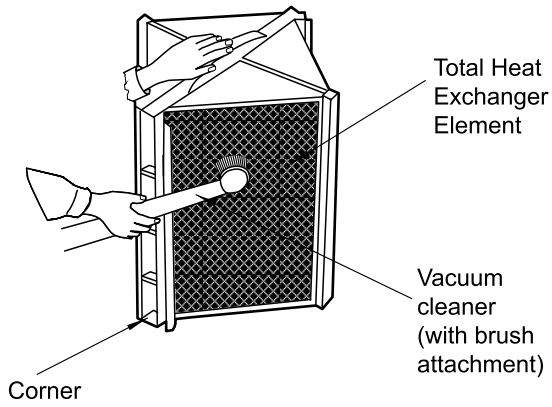

KPI-(502-2002)H2E

Aluminium heat exchanger can be cleaned using vapour.

Clean the exchanger using steam.

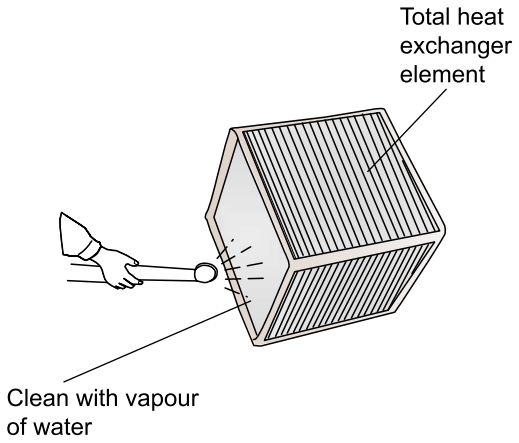

◆ KPI-3002H2E

Nº	Part
1	4 Screws.

Remove the screws.

Pull downwards to remove the heat exchanger element.

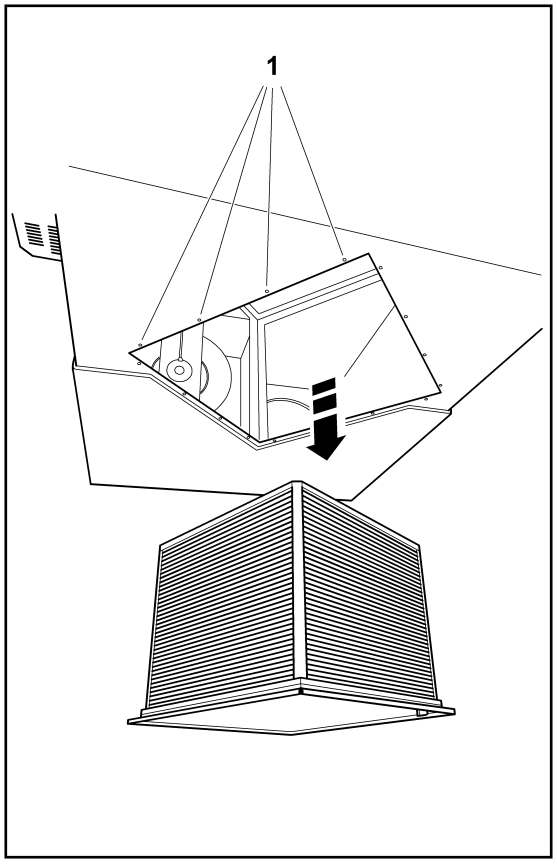

CAUTION

Be careful when handling and removing the heat exchanger. It is a heavy object and could fall out of its box.

Clean the exchanger using steam.

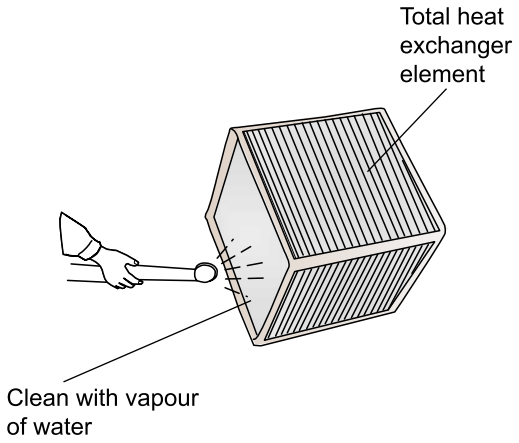

10.10.5 Energy recovery ventilation unit fan connectors and units

KPI-(252-2002)(E/H)2E

Remove the screws from the fan cover using an Allen key.

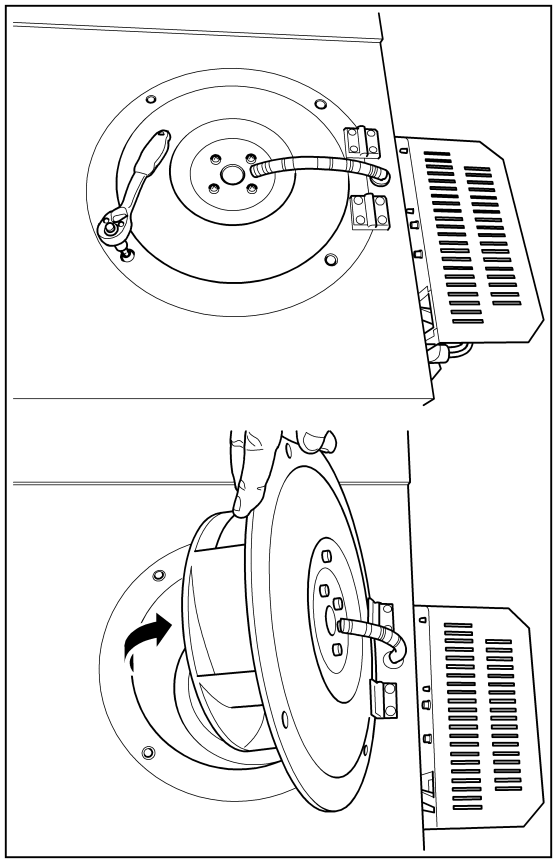

Remove the bolts securing the motors to remove them.

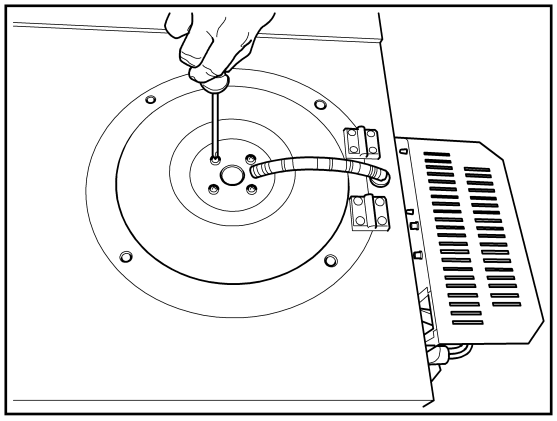

Nº	Part
1	Thermistor connectors.
2	Fan connectors.

Remove the four bolts securing the electrical box and access the connector as shown in the figure to replace the fan motors.

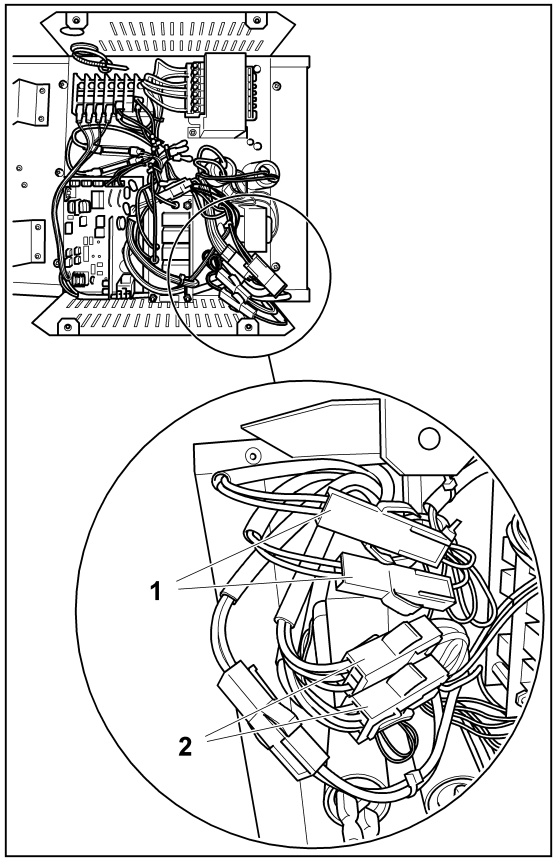

10.11 DX-Interface

10.11.1 Structure and part names

DX-Interface EXV-(2.0-6.0)E

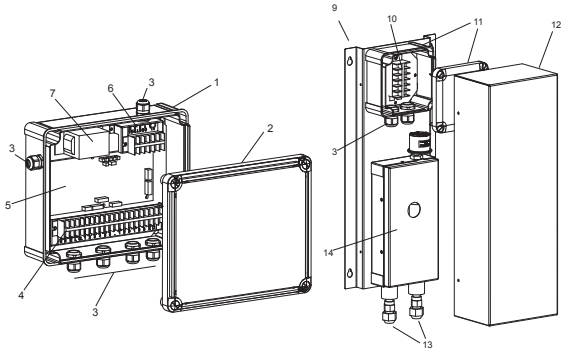

DX-Interface EXV-(8.0/10.0)E

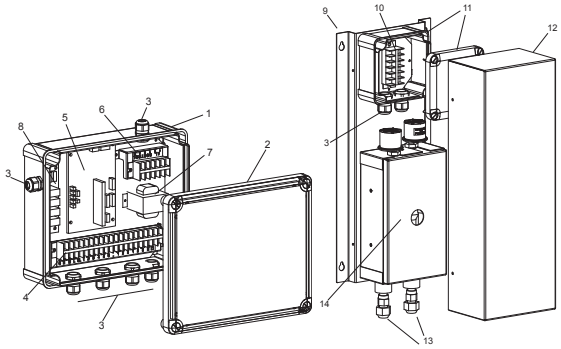

No.	Name	No.	Name
1	Control box	8	PCB2
2	Control box cover	9	Expansion valve box
3	Cable gland	10	Terminal board 3
4	Terminal board 1	11	Terminal board box and cover
5	PCB1	12	Expansion valve box cover
6	Terminal board 2	13	Refrigerant connections
7	Transformer	14	Expansion valve device

10.11.2 Removal of the electrical components

Remove the electrical box cover.

Separate the connections of all electrical components.

Remove the set screws -A- and separate the full electrical component support -B-.

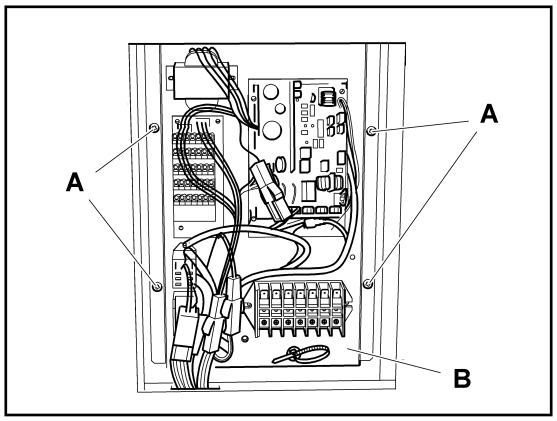

CAUTION

Handle the support carefully to avoid damaging the electrical components.

CAUTION

- ***Do not touch the electrical components of the PCB.***
- ***Do not apply force to the PCB, as this could damage it.***
- ***Pay special attention to the position of the connectors on the PCB. An incorrect position during installation may damage the PCB.***

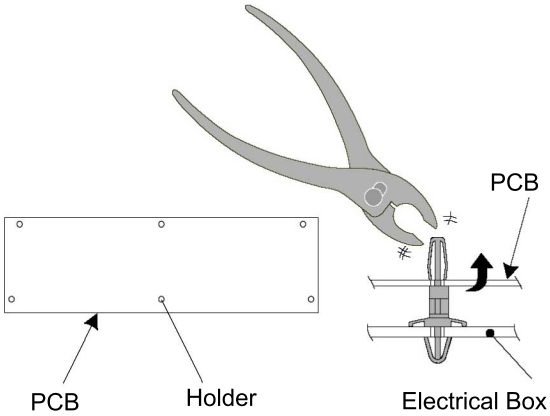

HITACHI
Inspire the Next

11. Electrical checks of the main parts

Index

11.1 Thermistor 378
11.2 Electronic expansion valve 379
11.3 Automatic louver mechanism 380
11.3.1 RCI(M) indoor units 380
11.3.2 RCD indoor units 381
11.3.3 RPC indoor units 381

11.1 Thermistor

Check that the thermistors are connected to the PCB inlet and, if not, connect them.

Use a multimeter to check that the thermistor resistance are between 240 Ω and 840 kΩ. Otherwise, replace any defective thermistors.

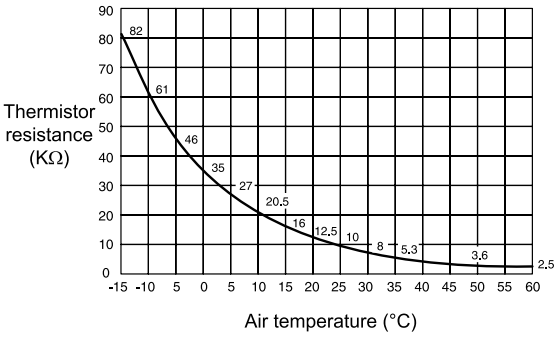

Thermistor characteristics

11.2 Electronic expansion valve

1 Check that the voltage of the valve ranges between 12 Vdc ± 1.2 V.
2 Use a multimeter to check the coil resistance (per phase). This ranges between 150 Ω ± 10% at an ambient temperature of 20 °C.
3 Check the number of pulses per second. This ranges between 100 Ω ± 250 pulses per second (the width between pulses is greater than 3 mm) on activating phase 2.
4 Check that the valve flow is reversible.
5 When the valve is fully open and in heating process, check that the temperature of the liquid in the piping increases. If not, this indicates a fault.
6 When the valve is slightly open or fully open, check that the temperature of the freeze protection thermistor is higher than the suction temperature. If not, this indicates a fault.

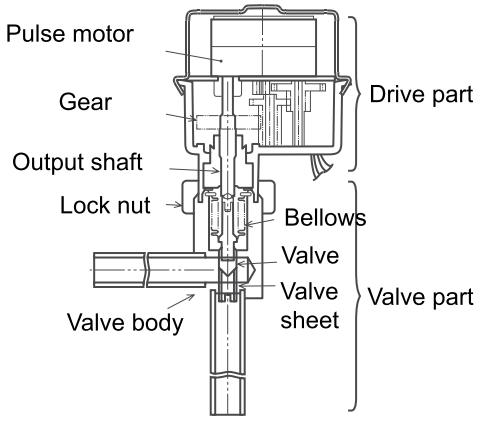

Adjustment of direction is not required.

(However, pay attention not to touch the pipes or the drain pan.)

Direction of drive part

11.3 Automatic louver mechanism

11.3.1 RCI(M) indoor units

Stop the automatic louver:

1. Press AUTO LOUVER on the remote control while the automatic louver is operating.
2. The AS-type stop (2) touches the end of the steel plate and the louver returns to position 0.
3. The motor (1) power supply switches off when the louver is at the set position.
4. The louver stops at the set position.

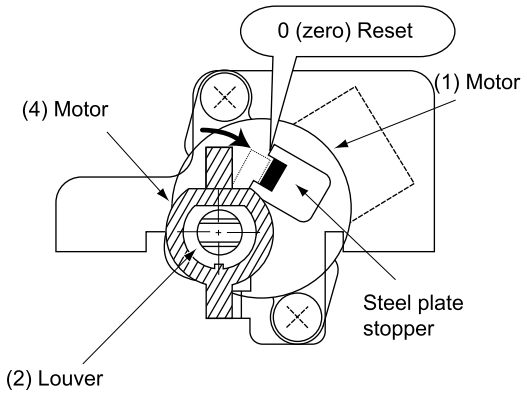

Remove the optional air panel.

Remove the automatic louver cover and motor.

Check for dust, dirt, damp and cracks on the parts.

Check the joints and meshing between the parts:

Number	Part name
1	Motor
2	Louver
3	Bushing
4	Stop

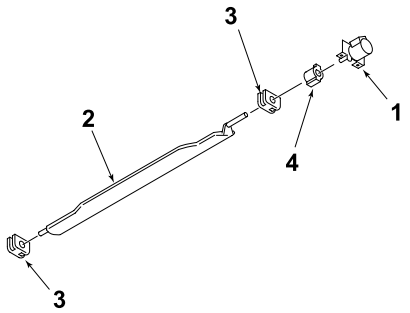

Check that the motor connectors are correctly connected to the power supply.

Check that the motor has a power supply of 12 V.

Start the panels.

Press LOUVER to start the louver movement.

Check the meshing of the louver parts and that the louver movement is correct.

Fit the automatic louver cover and motor.

Fit the optional air panel.

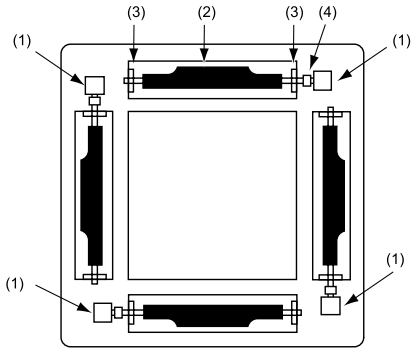

11.3.2 RCD indoor units

Stop the automatic louver:

1 Press AUTO LOUVER on the remote control while the automatic louver is operating.
2 The crank (2) touches the end of the motor securing plate (7) and the louver returns to position 0.
3 The motor (1) power supply switches off when the louver is at the set position.
4 The louver (6) stops at the set position.

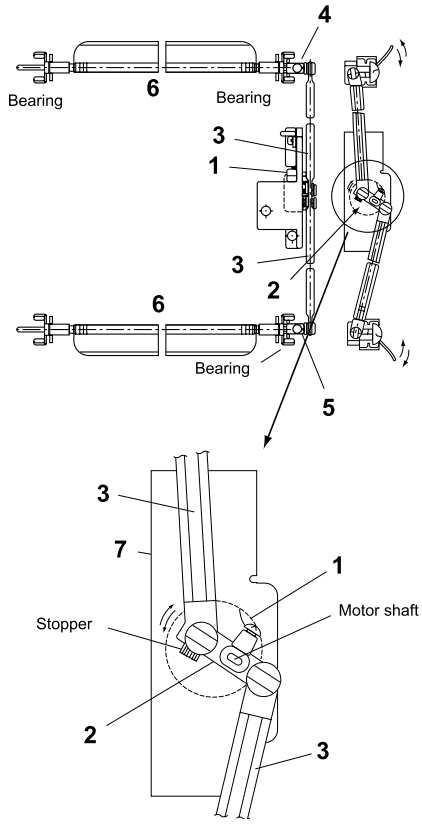

Remove the optional air panel.

Remove the automatic louver cover and motor.

Check for dust, dirt, damp and cracks on the parts.

Number	Part name
1	Motor
2	Crank
3	Arm
4	Shaft A
5	Shaft B
6	Louver
7	Motor securing plate

Check the meshing and the joints between the parts:

1 Motor shaft and crank, separated by the motor securing plate.
2 Crank and arms.
3 Arms and shafts.
4 Shafts and louver shaft.
5 Bushings and louver.

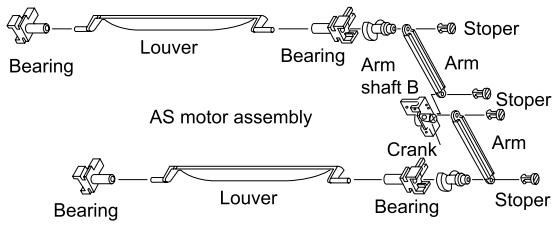

Check that the motor connectors are correctly connected to the power supply.

Check that the motor has a power supply of

Start the panels.

Press to start the louver movement.

Check the meshing of the louver parts and that the louver movement is correct.

Fit the automatic louver cover and motor.

Fit the optional air panel.

11.3.3 RPC indoor units

Stop the automatic louver:

1 Press AUTO LOUVER on the remote control while the automatic louver is operating.
2 The gear (3) touches the end of the cover (6) and the louver returns to position 0.
3 The motor (1) power supply switches off when the louver is at the set position.
4 The louver (6) stops at the set position.

Number	Part name
1	Motor
2	Pinion
3	Gear
4	Bushing
5	Cover
6	Louver

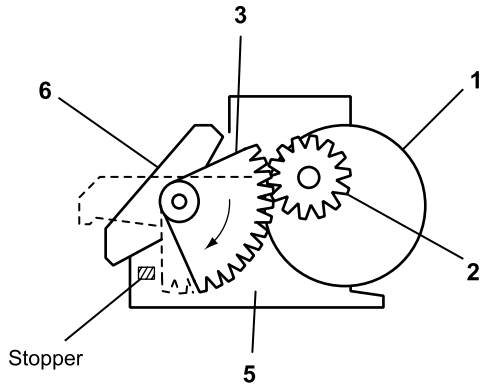

Remove the optional air panel.

Remove the automatic louver cover and motor.

Check for dust, dirt, damp and cracks on the parts.

Check the meshing and the joints between the parts:
1 Motor shaft and pinion.
2 Pinion and gear.
3 Gear and louver shaft.
4 Bushings and louver.

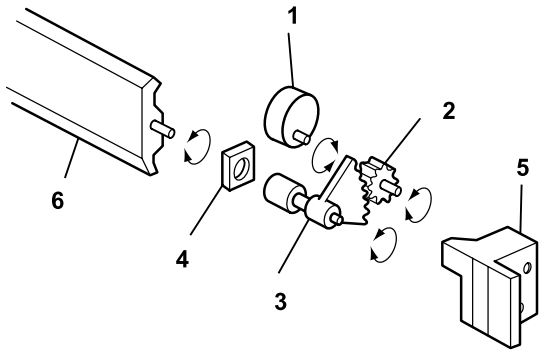

Check that the motor connectors are correctly connected to the power supply.

Check that the motor has a power supply of

Start the panels.

Press to start the louver movement.

Check the meshing of the louver parts and that the louver movement is correct.

Fit the automatic louver cover and motor.

Fit the optional air panel.

HITACHI
Inspire the Next

12. Maintenance notes

Index

12.1 Regular equipment maintenance..... 384
12.1.1 Regular equipment maintenance..... 384
12.1.2 Indoor heat exchanger cleaning..... 401
12.1.3 Collection of refrigerant to replace the indoor unit..... 411

12.1 Regular equipment maintenance

12.1.1 Regular equipment maintenance

◆ Necessary tools, equipment and consumable for regular maintenance

Tools

Tool	Remarks
Water pump for cleaning 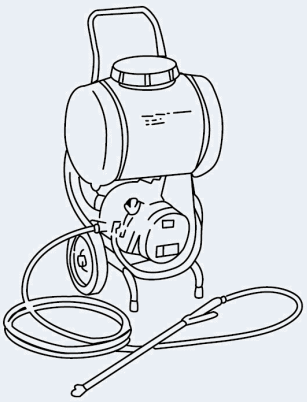	Use of a water pump with a tank is recommended
Cleaning water tank	Approx. 18 litres
Nozzle	
Brush 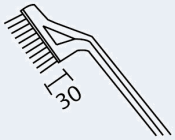	Non-metal, with a brush length of 25 to 35 mm
Bucket	Capacity 2 to 5 litres
Philips screwdriver	1
Tweezers	1
Adjustable wrench	1
Megohmmeter	Measured voltage of up to 500 V
Gun	Applying cleaning water
Rope	4 ropes measuring 1 m
Vinyl sheeting	Thickness of 0.5 mm
Gloves	
Water pan pipe	Select a pipe in line with the installation requirements

Equipment

Equipment	Remarks
Cleaning water manifold 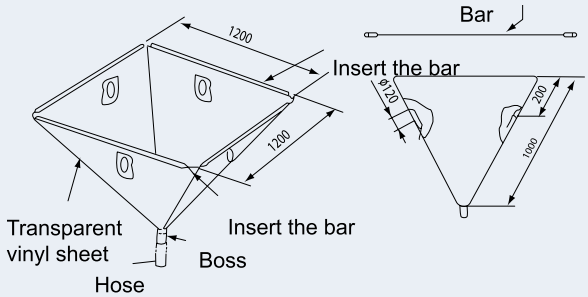 Inner side of Ø120 hole should be covered with felt sheet in order to insert the spray nozzle	Depending on the type of unit to be cleaned, use a duct-type, built-in 2-way type, wall type or ceiling type manifold. The lower part of the Ø120 hole must be covered with a piece of felt to insert the nozzle of the gun
Cleaning water manifold kit	Built-in 4-way

Cleaning water manifold kit

Parts	Material	Remarks	Quantity
Container with access panel	Vinyl chloride sheeting	1 mm thick, with a 0.3 mm access panel	1
Bracket A	Stainless steel		8
Sheeting A	Vinyl chloride sheeting	1 mm in thickness, with support B and magnet	1
Sheeting B	Vinyl chloride sheeting	1 mm in thickness, with support B and magnet	1
Sheeting C	Vinyl chloride sheeting	1 mm in thickness, with support B and magnet	1
Sheeting D	Vinyl chloride sheeting	1 mm in thickness, with support B and magnet	1
Motor panel	Vinyl chloride sheeting	1 mm in thickness with magnet	1
Motor flange	Vinyl chloride sheeting	1 mm in thickness, adhesive tape	1
Connection panel	Vinyl chloride sheeting		1
Gloves	Rubber		1
Sling		1 m	4

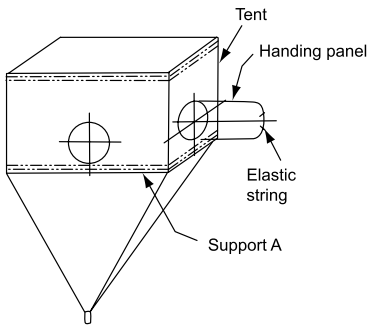

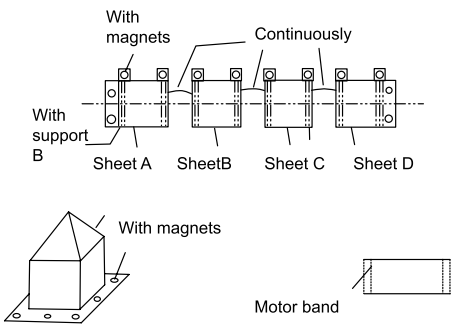

Consumables

Consumable	Remarks
Cleaning product	Neutral soap
Adhesive tape	To secure the vinyl sheeting so that the room is protected from the cleaning water
Piece of felt	Diameter of 120 mm

◆ Indoor units

RCI(M) - 4-way cassette type

DANGER

Wear gloves to avoid injuries when handling components.

Work prior to cleaning

Turn off the power supply switches before starting maintenance work and fit the appropriate safety locks and warnings.

Wait 5 minutes after turning off the power supply switches.

Place a vinyl sheet on the floor to protect the furniture and other items from the cleaning water.

Remove the following components:

1 Optional air panel.
2 Electrical box.
3 Bellmouth and fan.
4 Drain pan.
5 Float switch.

Cleaning the indoor unit

Place a vinyl sheet around the heat exchanger to prevent the cleaning water from splashing the insulation surface and drain pump.

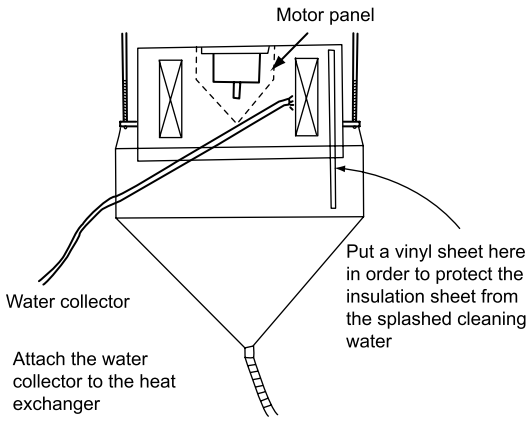

Attach the vinyl sheet to the side plate of the exchanger using adhesive tape. Seal the gap between the vinyl sheets with adhesive tape.

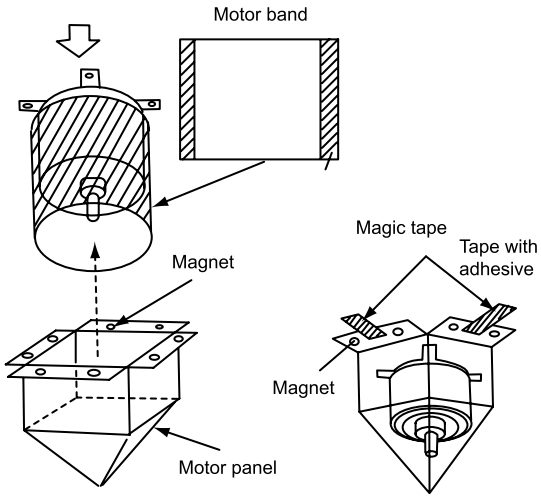

Use a brush to clean any dust from the interior surface of the heat exchanger. To do so, brush downwards and collect all of the dust in a bucket or cardboard box.

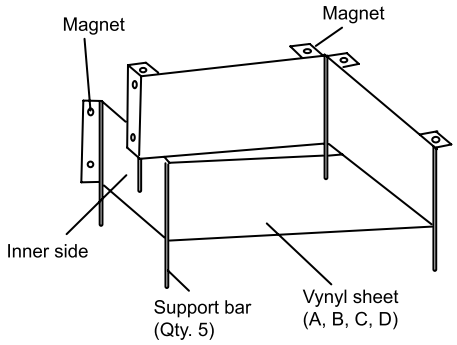

Follow the steps below to hang the cleaning water manifold from the indoor unit:

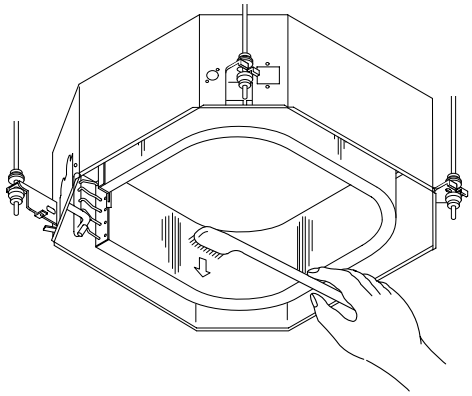

Tie the rope to the suspension bracket of the indoor unit and drop downwards.

Insert the support bars into the holes in the cleaning water manifold.

Tie another rope to the support bar of the water manifold and hang the manifold.

NOTE

The water manifold must be 20 to 30 mm higher than the bottom of the unit.

Connect a pipe to the boss and place the end inside a bucket.

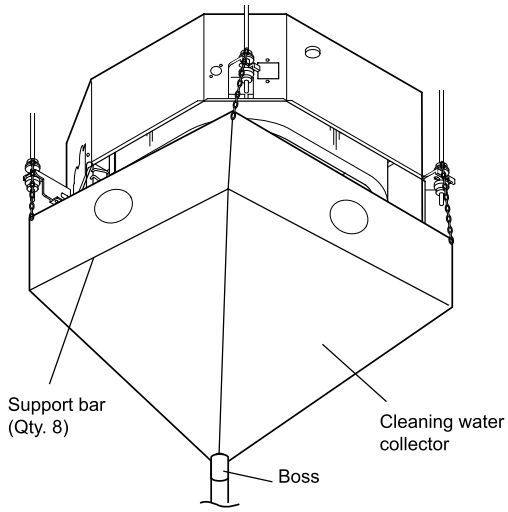

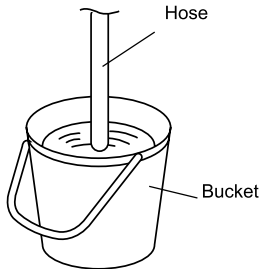

Pour approximately 15 litres of cleaning product into a supply tank.

Insert the nozzle of the gun into the hole in the cleaning water manifold.

Set the water pump pressure to between 2.5 and 5 kg/cm^2 to protect the fins.

Start the water pump and clean the heat exchanger of any dust.

CAUTION

Dry all drops of water from the indoor unit. Any water remaining could rust parts of the unit.

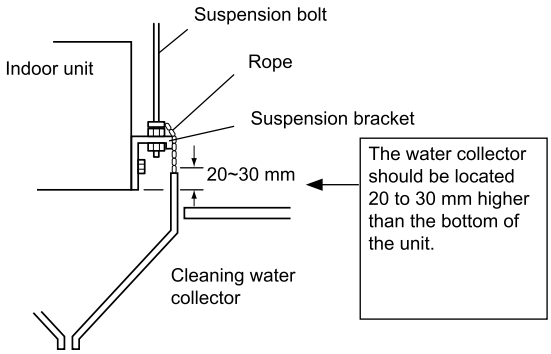

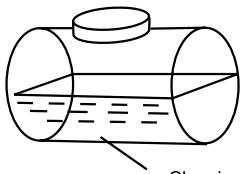

Spray and remove any remains of water.

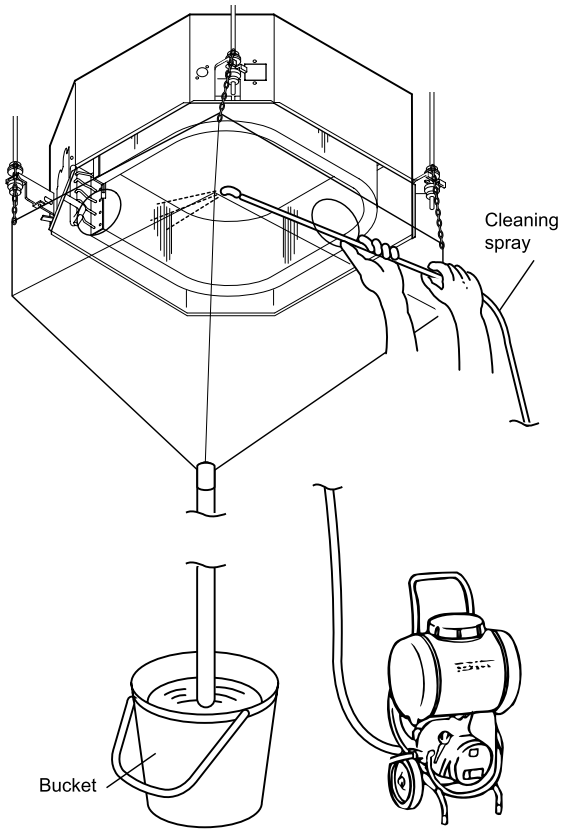

Work and checks after cleaning

Lower the rope and fit the drain pan.

Measure the drainage pump insulation using a megohmmeter, check that the insulation is over a 1 MΩ on applying 500 V.

Remove the vinyl sheets.

Fit the bellmouth and fan.

Fit the optional air panel.

Fit the electrical box.

Fit the drain pan.

NOTE

The cleaning product is neutral. However, after it has been used the cleaning water may no longer be neutral.

Collect all cleaning water and apply the neutralisation treatment once you have disposed of it.

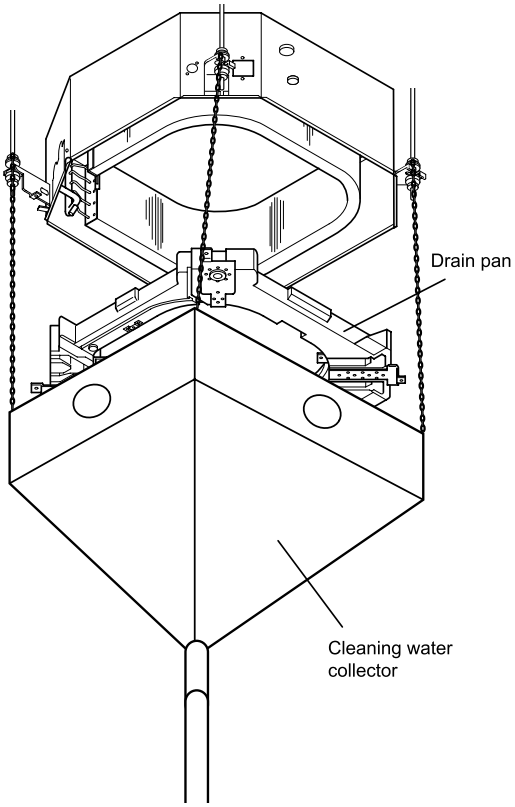

RCD - 2-way cassette type

DANGER

Wear gloves to avoid injuries when handling components.

Work prior to cleaning

Turn off the power supply switches before starting maintenance work and fit the appropriate safety locks and warnings.

Wait 5 minutes after turning off the power supply switches.

Place a vinyl sheet on the floor to protect the furniture and other items from the cleaning water.

Remove the following components:

1 Drain pan.
2 Float switch.
3 Drain mechanism.

Cleaning the indoor unit

Clean the drain pan you have just removed.

Use a brush to clean any dust from the interior surface of the heat exchanger and from the fins on the inlet side. To do so, brush downwards and collect all of the dust in a bucket or cardboard box.

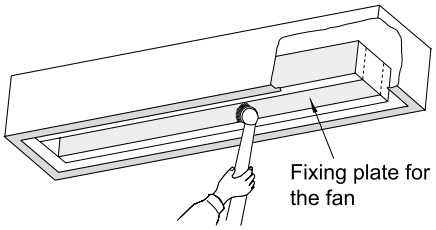

Place a vinyl sheet around the heat exchanger to prevent the cleaning water from splashing the insulation surface and drain pump.

Attach the vinyl sheet to the side plate of the exchanger using adhesive tape. Seal the gap between the vinyl sheets with adhesive tape.

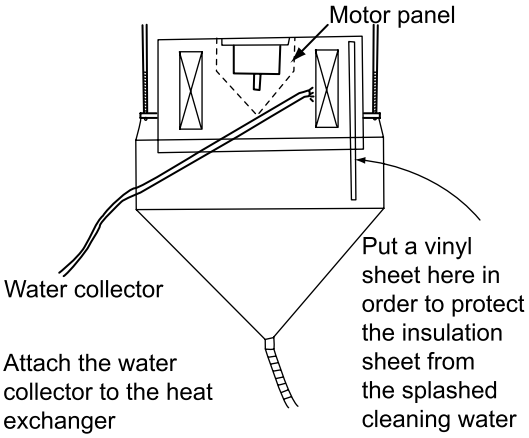

Follow the steps below to hang the cleaning water manifold from the indoor unit:

1 Tie the rope to the suspension bracket of the indoor unit and drop downwards.
2 Insert the support bar into the holes in the cleaning water manifold.
3 Use the indoor unit rope to hang the water manifold.
4 Connect a pipe to the boss and place the end inside a bucket.

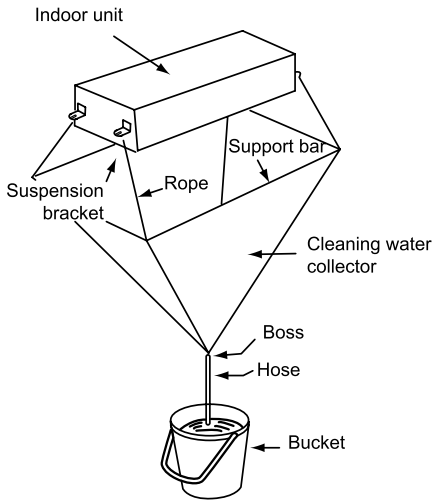

Follow the steps below to wash with clean water:

1 Insert the nozzle of the gun into the hole in the cleaning water manifold.
2 Set the water pump pressure to between 2.5 and 5 kg/cm^2 to protect the fins.
3 Start the water pump and wash the fins with clean water.
4 Spray cleaning water over the heat exchanger fins.

CAUTION

If you are using a cleaning product, wash the heat exchanger fully with clean water.

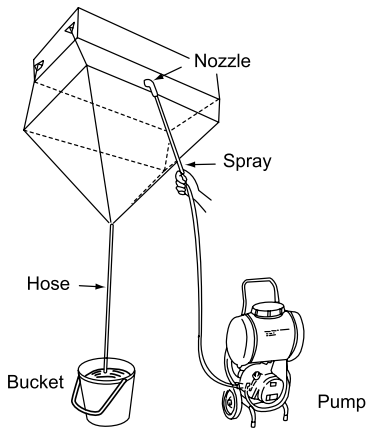

Work and checks after cleaning

CAUTION

Start the following jobs once the water stops dripping.

1 Fit the fan unit and the drain pan.
2 Measure the drainage pump insulation using a megohmmeter, check that the insulation is over a 1 MΩ on applying 500 V.
3 Connect the wiring.
4 Remove the vinyl sheets.
5 Fit the air distribution chamber and the optional air panel.

NOTE

The cleaning product is neutral. However, after it has been used the cleaning water may no longer be neutral.

6 Collect the cleaning water and apply the neutralisation treatment once you have disposed of it.

RPK - Wall type

DANGER

Wear gloves to avoid injuries when handling components.

Work prior to cleaning

Turn off the power supply switches before starting maintenance work and fit the appropriate safety locks and warnings.

Wait 5 minutes after turning off the power supply switches.

Place a vinyl sheet on the floor to protect the furniture and other items from the cleaning water.

Remove the following components:
1. Front panel.
2. Electrical box panel.
3. Drain pan.
4. Heat exchanger and fan motor.

Cleaning the indoor unit

Use a brush to clean away any dust. To do so, brush downwards and collect all of the dust in a bucket or cardboard box.

Cover the electrical components with a vinyl sheet to protect them from splashed cleaning water.

Follow the steps below to wash with clean water:
1. Insert the nozzle of the gun into the hole in the cleaning water manifold.
2. Set the water pump pressure to between 2.5 and 5 kg/cm^2 to protect the fins.
3. Start the water pump and wash the fins with clean water.
4. Spray cleaning water over the heat exchanger fins.

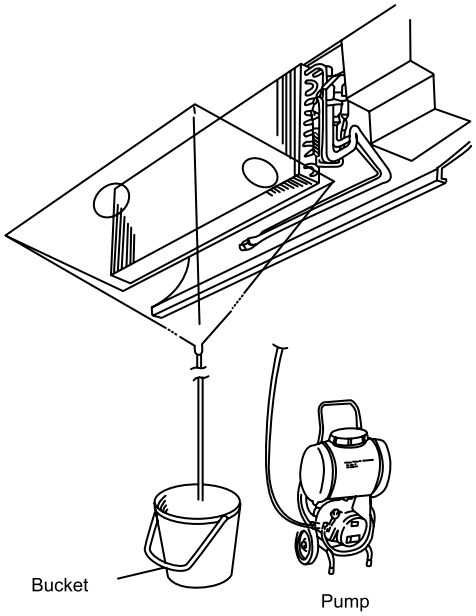

CAUTION

If you are using a cleaning product, wash the heat exchanger fully with clean water.

Work and checks after cleaning

1. Remove the vinyl sheets.
2. Fit the following components:
   - **a** Heat exchanger and fan motor.
   - **b** Drain pan.
   - **c** Electrical box panel.
   - **d** Front panel.

NOTE

The cleaning product is neutral. However, after it has been used the cleaning water may no longer be neutral.

3. Collect the cleaning water and apply the neutralisation treatment once you have disposed of it.

RPF(I) - Floor type

DANGER

Wear gloves to avoid injuries when handling components.

Work prior to cleaning

Turn off the power supply switches before starting maintenance work and fit the appropriate safety locks and warnings.

Wait 5 minutes after turning off the power supply switches.

Place a vinyl sheet on the floor to protect the furniture and other items from the cleaning water.

Remove the front panel.

Disconnect the drain piping.

Remove the front partition and the drain pan.

Cover the rear of the heat exchanger with a vinyl sheet

Fit the front partition and the drain pan.

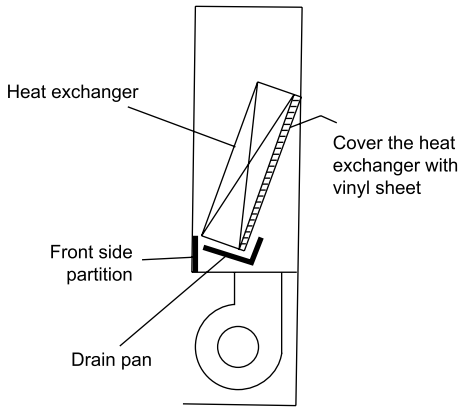

Cleaning the indoor unit

Lift the drain pipe and place the end in a bucket.

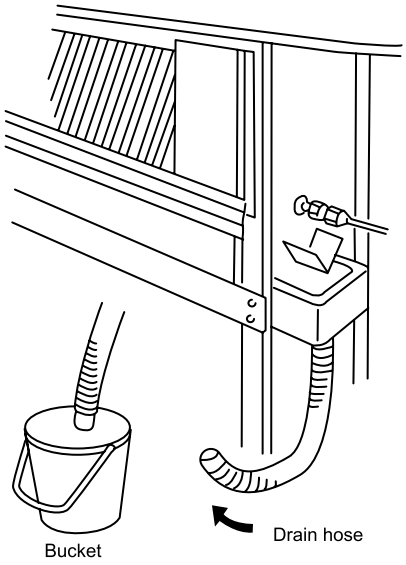

Use a brush to clean any dust from the interior surface of the heat exchanger. To do so, brush downwards and collect all of the dust in a bucket or cardboard box.

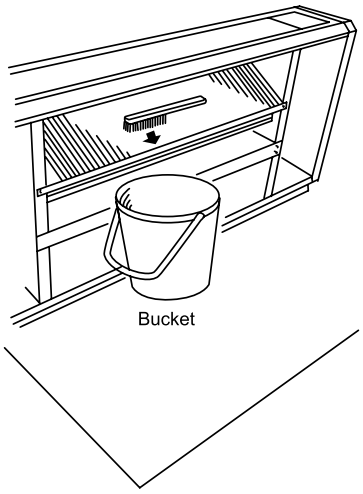

Spray cleaning water over the heat exchanger fins.

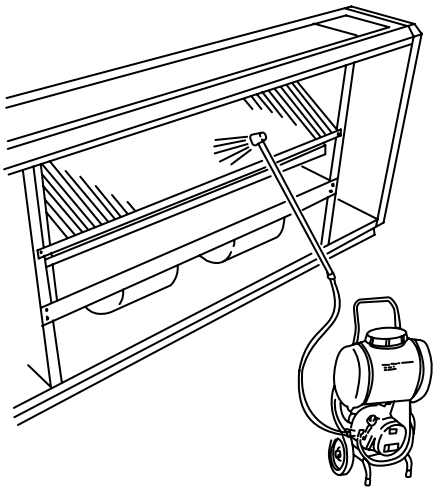

CAUTION

If you are using a cleaning product, wash the heat exchanger fully with clean water.

Cover the wiring connectors with insulating tape.

Close the control tape if open.

Set the water pump pressure to between 2.5 and 5 kg/cm^2 to protect the fins.

Start the water pump.

Connect the drain piping and remove the insulating tape from the wiring connectors.

Work and checks after cleaning

1 Connect the drain piping and remove the insulating tape from the wiring connectors.
2 Remove the vinyl sheets.
3 Fit the front panel.
4 Measure the electrical box terminal board insulation using a megohmmeter, check that the insulation is over a 1 MΩ on applying 500 V.

NOTE

The cleaning product is neutral. However, after it has been used the cleaning water may no longer be neutral.

5 Collect the cleaning water and apply the neutralisation treatment once you have disposed of it.

RPI(M) - Ducted indoor unit type

DANGER

Wear gloves to avoid injuries when handling components.

Work prior to cleaning

Turn off the power supply switches before starting maintenance work and fit the appropriate safety locks and warnings.

Wait 5 minutes after turning off the power supply switches.

Place a vinyl sheet on the floor to protect the furniture and other items from the cleaning water.

Remove the following components:
1 Side panel.
2 Discharge air grille.
3 Air filter.
4 Liquid and gas piping thermistors.
5 Fan motor.

Remove the set screws from the partition plate 2 and remove the plate.

Remove the set screws from the fan cover, located on the left and right of the partition. Then remove the fan cover.

Fit the drain pan and the lower panel.

Cover the components (except the drain pan) with a vinyl sheet to avoid splashing with cleaning water.

Use a brush to clean any dust from the interior surface of the heat exchanger and the fins. To do so, brush downwards and collect all of the dust in a bucket or cardboard box.

Spray cleaning water over the fins from the rear of the heat exchanger.

Follow the steps below to wash with clean water:

1 Set the water pump pressure to between 2.5 and 5 kg/cm^2 to protect the fins.
2 Start the water pump and wash the fins with clean water.

Work and checks after cleaning

1 Measure the drainage pump insulation using a megohmmeter, check that the insulation is over a 1 MΩ on applying 500 V.
2 Pour water into the drain pan to check that the water flows easily.
3 Remove the vinyl sheets.
4 Fit the fan cover and fit and tighten the cover securing screws.
5 Fit the partition plate and fit and tighten the plate securing screws.
6 Fit the following components:
   a Fan motor.
   b Liquid and gas piping thermistors.
   c Air filter.
   d Discharge air grille.
   e Side panel.

NOTE

The cleaning product is neutral. However, after it has been used the cleaning water may no longer be neutral.

7 Collect the cleaning water and apply the neutralisation treatment once you have disposed of it.

◆ KPI - Fan units with energy recovery

Filter maintenance

KPI-3002H2E

Open the filter access door.

Remove the filters.

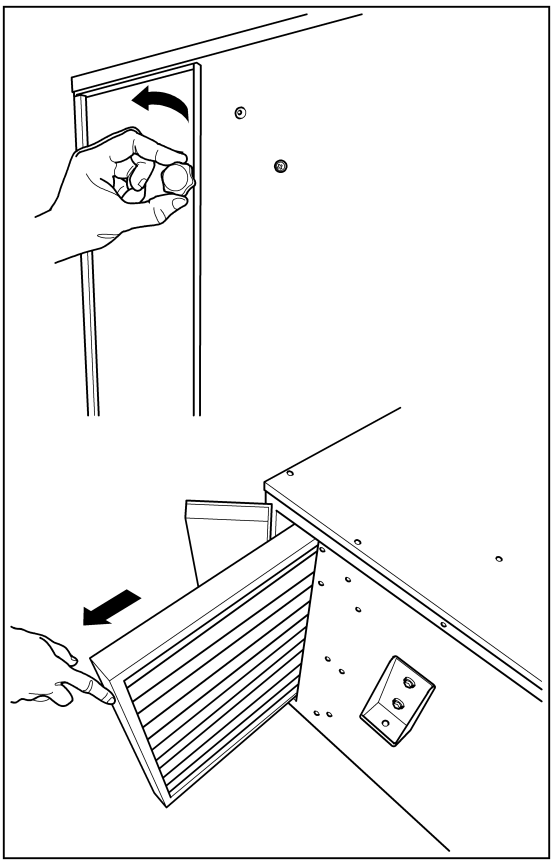

Use a vacuum cleaner to suck up any dust.

Dissolve a little neutral soap in cold or warm water to clean the dirt.

Place the filters in the soapy water to clean them.

Allow the filters to dry.

Fit the filter.

Close the service cover.

Press the RESET switch on the remote control.

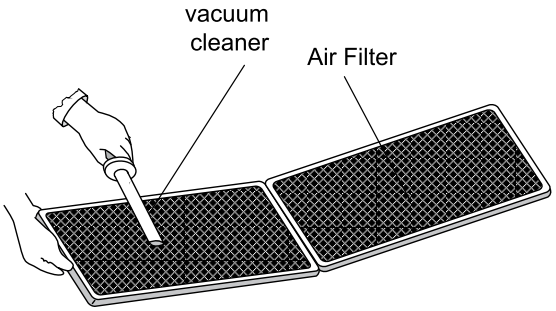

Fan connector and unit maintenance

For KPI-(252-2002)E2E systems

Fan connector and unit removal and cleaning:

Turn off the power supply switches before starting maintenance work and fit the appropriate safety locks and warnings.

Wait 5 minutes after turning off the power supply switches.

Loosen and remove the 4 bolts securing the electrical box to access the fan motor connectors.

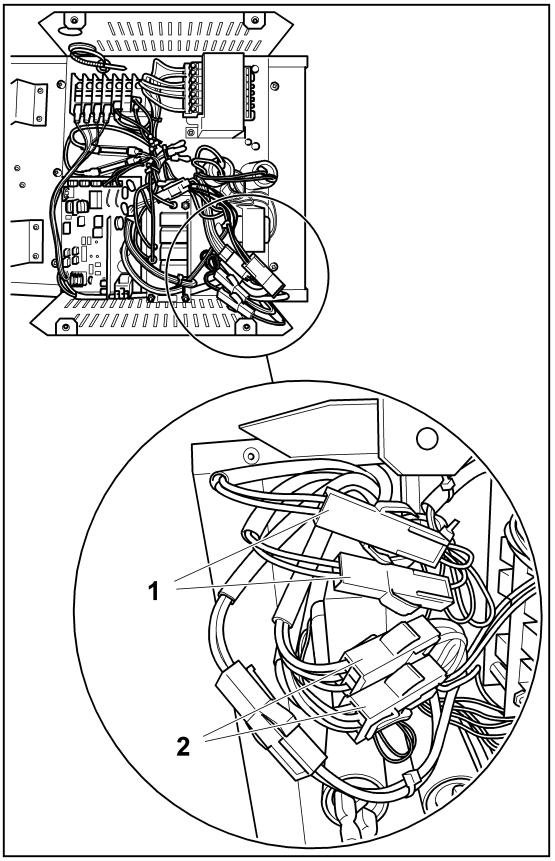

Disconnect the fan connectors and thermistors.

Loosen and remove the 4 bolts located on the fan cover to open it.

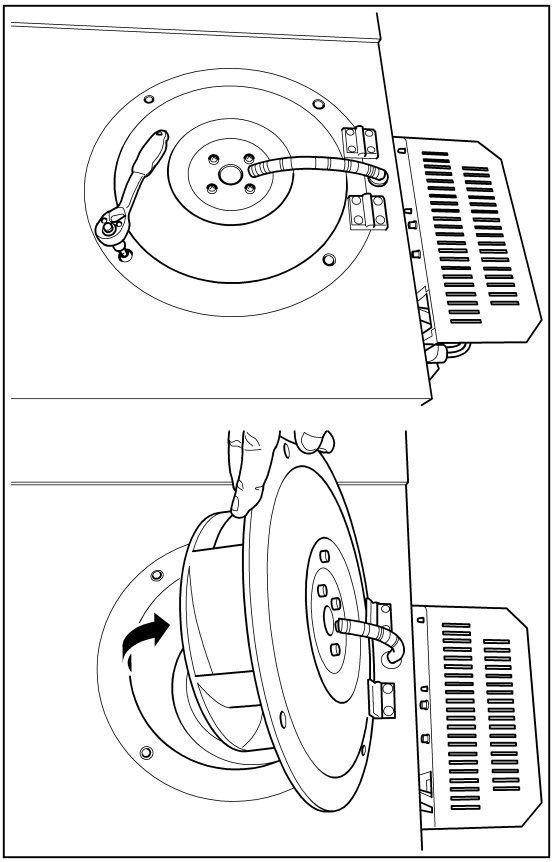

Loosen and remove the 4 bolts securing each motor to remove it.

Remove the fan motors.

Clean the fan motors and connectors.

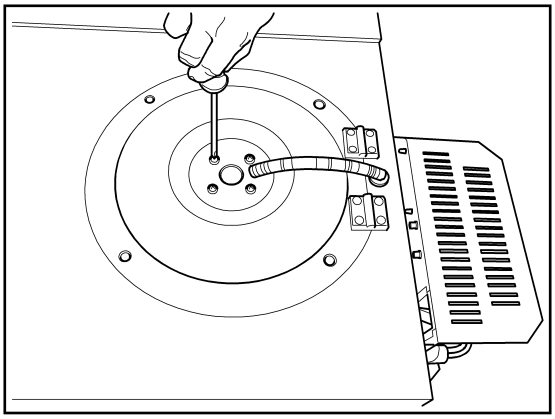

Fan connector and unit insertion and connection:

1 Insert the fan motors.
2 Fit and tighten the 4 bolts securing each motor to install it.
3 Fit and tighten the 4 bolts located on the fan cover to close it.
4 Connect the fan connectors and thermistors.
5 Fit and tighten the 4 bolts securing the electrical box.
6 Turn on the power supply switches after completing the maintenance work.

Maintenance of heat exchanger components

For KPI-(252-2002)E2E systems

Removal and cleaning of heat exchanger components

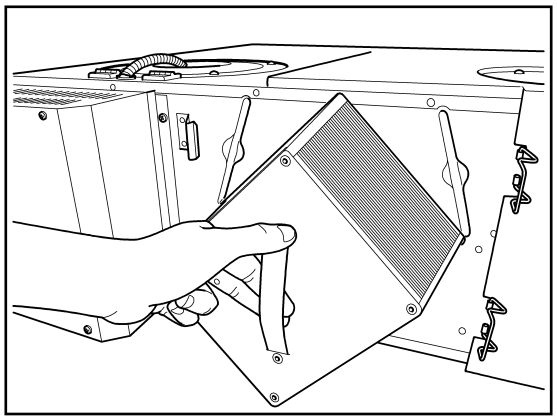

NOTE

Clean the components at least every two years to avoid a drop in the air flow and the heat exchanger efficiency.

Turn off the power supply switches before starting maintenance work and fit the appropriate safety locks and warnings.

Wait 5 minutes after turning off the power supply switches.

Pull on the hinges to open the service cover and then remove it.

CAUTION

The heat exchanger is a heavy item. Be careful when handling it.

Remove the heat exchanger by pulling on the handle.

Remove the filters located at the bottom left and bottom right of the heat exchanger.

Fit a nozzle with a brush to a vacuum cleaner.

Use the vacuum cleaner to suck up any dust and dirt by passing the brush gently over the exposed surfaces of the heat exchanger parts.

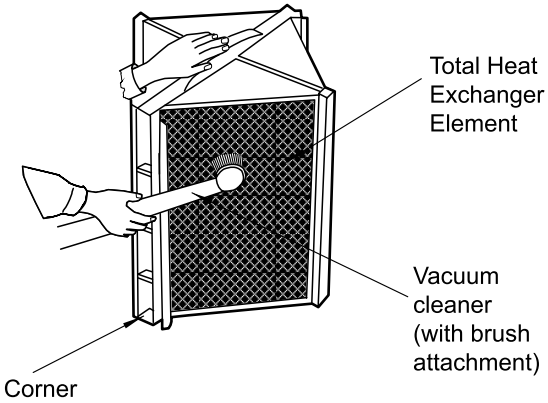

Insertion of heat exchanger components

1 Fit the filters at the bottom left and bottom right of the heat exchanger.

CAUTION

The heat exchanger is a heavy item. Be careful when handling it.

2 Insert the heat exchanger.
3 Close the service cover and the hinges.
4 Connect the power switches.
5 Press the RESET button on the remote control.

For KPI-(3002)H2E systems

Removal and cleaning of heat exchanger components

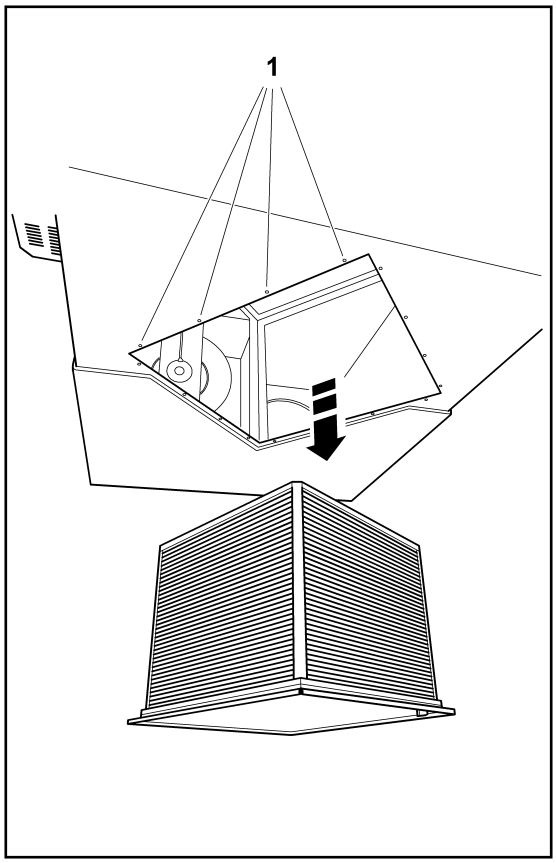

NOTE

Clean the components at least every two years to avoid a drop in the air flow and the heat exchanger efficiency.

Switch off the power supply switches before starting maintenance work.

Wait 5 minutes after turning off the power supply switches.

Loosen and remove the 4 bolts securing the heat exchanger.

CAUTION

The heat exchanger is a heavy item. Be careful when handling it.

Clean the heat exchanger with steam.

Pull downwards to remove the heat exchanger.

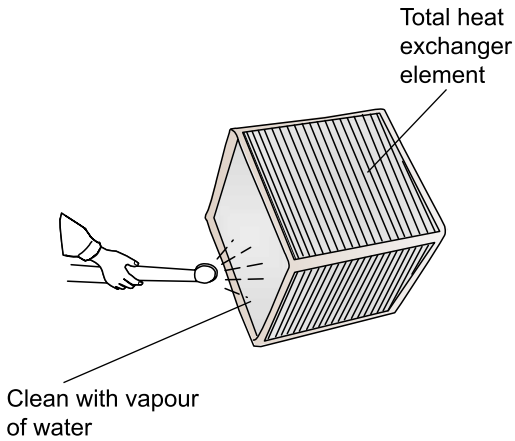

Insertion of heat exchanger components

CAUTION

The heat exchanger is a heavy item. Be careful when handling it.

1 Fit the heat exchanger.
2 Insert and tighten the 4 bolts securing the heat exchanger.
3 Turn on the power supply switches after completing the maintenance work.

Econofresh kit

DANGER

Wear gloves to avoid injuries when handling components.

CAUTION

- ***Clean the air filter more than once a year.***
- ***Clean the heat exchanger unit once or more every two years***

Turn off the power supply switches before starting maintenance work and fit the appropriate safety locks and warnings.

Wait 5 minutes after turning off the power supply switches.

Clean the exchanger and/or air filter.

CAUTION

- ***Do not start the system without the air filter.***

Turn on the power supply after completing the maintenance work.

12.1.2 Indoor heat exchanger cleaning

◆ Cleaning tools

CAUTION

Before starting any of the servicing work described in this chapter, turn off all main switches and fit safety locks or warnings to prevent them from being accidentally switched on.

Necessary cleaning tools

The necessary cleaning tools for all indoor units are described below.

Number	Tool	Remarks
1	Water pump for cleaning 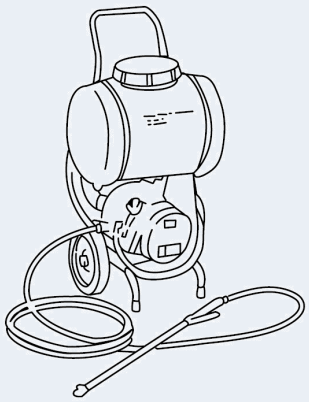	Use of a water pump equipped with a tank is recommended
2	Cleaning water tank	Approximately 18 litres
3	Nozzle	—
4	Brush (non-metal) 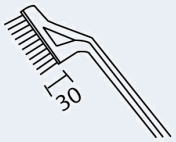	If the heat exchanger is very blocked with dust, clean with a brush. The brush must be 25 to 35 mm in length.
5	Water pan pipe	Select a pipe in line with the installation requirements.
6	Bucket	2 to 5 litres
7	Philips screwdriver	1
8	Tweezers	1
9	Adjustable wrench	1
10	Megohmmeter	It should withstand 500 V
11	Cleaning product	Use a neutral cleaning product.
12	Pressurised water gun	To apply the cleaning water
13	Adhesive tape	To secure the vinyl sheeting so that the room is protected from the cleaning water
14	Rope	4 ropes measuring 1 m
15	Vinyl sheeting	Use vinyl sheeting that is 0.5 mm in thickness
16	Gloves	—

Number	Tool	Remarks
17	Cleaning water manifold 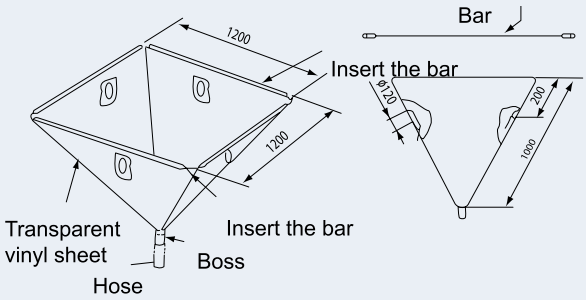 Inner side of Ø120 hole should be covered with felt sheet in order to insert the spray nozzle	• Duct type. • Built-in 2-way • Wall type. • Ceiling type. • The inside of the Ø120 hole must be covered with a piece of felt to insert the nozzle of the gun.
18	Cleaning water manifold kit	Built-in 4-way

Necessary cleaning materials.

The necessary cleaning materials for all indoor units are described below.

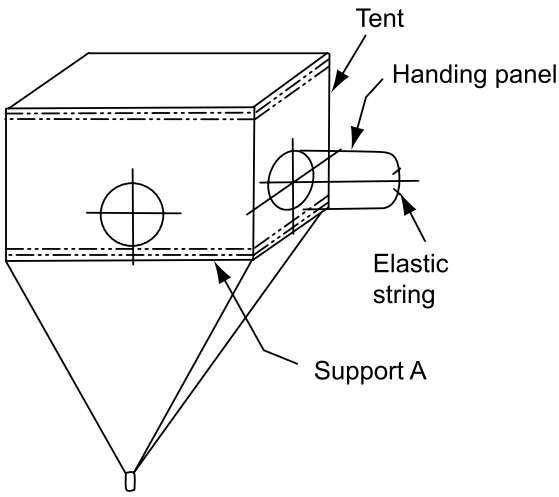

Number	No.	Material	Remarks	Quantity
1	Container with access panel	Vinyl chloride sheeting	1 mm thick, with a 0.3 mm access panel	1
2	Bracket A	Stainless steel	—	8
3	Sheeting A	Vinyl chloride sheeting	1 mm in thickness, with support B and magnet	1
4	Sheeting B	Vinyl chloride sheeting	1 mm in thickness, with support B and magnet	1
5	Sheeting C	Vinyl chloride sheeting	1 mm in thickness, with support B and magnet	1
6	Sheeting D	Vinyl chloride sheeting	1 mm in thickness, with support B and magnet	1
7	Motor panel	Vinyl chloride sheeting	1 mm in thickness with magnet	1
8	Motor flange	Vinyl chloride sheeting	1 mm in thickness, invisible adhesive tape	1
9	Wiring panel	Vinyl chloride sheeting	—	1
10	Gloves	Vibrations	—	1
11	Sling cable	—		4

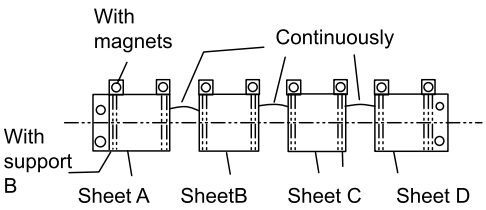

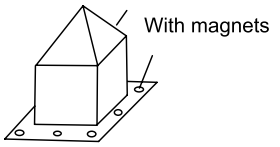

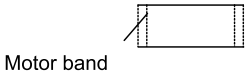

◆ Cleaning the built-in 4-way indoor unit RCI(M)

Preliminary procedure.

Place a vinyl sheet on the floor to protect the furniture and other items from the cleaning water before starting this job.

Remove the optional air panel as indicated in sections *Removal of the optional air panel, see on page 293* and *Removal of the optional air panel, see on page 301*.

Remove the electrical box after opening the corresponding panel and then disconnect the connectors located between the indoor and outdoor units and other connectors, as indicated in sections *Removal of the electrical box cover, see on page 300* and *Removal of the electrical box, see on page 302*.

Remove the bellmouth and fan as indicated in section *Removal of the fan duct and the fan, see on page 303*.

Remove the drain pan as indicated in sections *Removal of the drain pan, see on page 296* and *Removal of the drain pan, see on page 304*. Also carry out the following tasks:

1. Remove the drain pan after emptying it of water.
2. Empty the drain pan of water by removing the rubber plug. Make sure the water flows easily through the hole by inserting a pencil into it.
3. Once the drain pan has been removed, check that there is no water in the drainage at the bottom of the pan.
4. Clean and dry the pan before removing it. Handle the pan carefully.

Remove the float switch as indicated in sections *Removal of the float switch, see on page 297* and *Removal of the float switch, see on page 306*.

Cleaning the indoor unit

NOTE

Wear gloves to avoid injuries caused by the heat exchanger fins.

Place a vinyl sheet around the heat exchanger to prevent the cleaning water from splashing the insulation surface and drain pump.

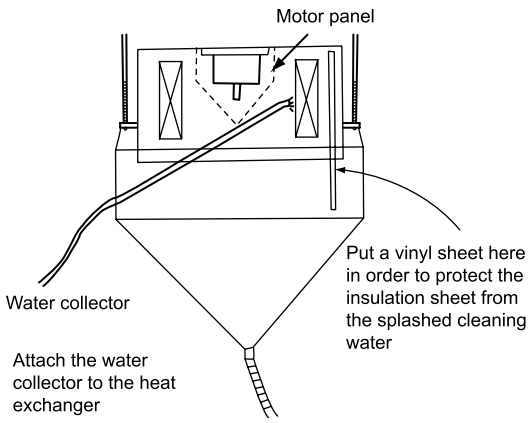

Secure the vinyl sheet to the side plate of the exchanger using adhesive tape and seal the gap between the vinyl sheets in the same manner.

Secure the motor panel using adhesive tape.

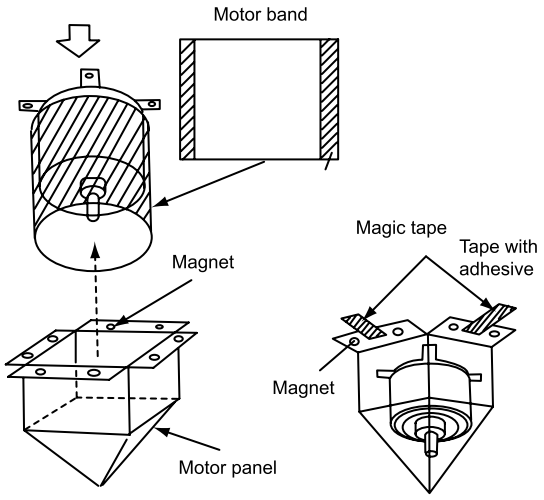

Clean the dust from the inner surface of the heat exchanger by brushing it downwards. Collect all of the dust in a bucket or a cardboard box.

Hang the cleaning water manifold from the indoor unit.

Tie the rope to the suspension bolts of the indoor unit and drop downwards.

Insert the support bars into the holes in the water manifold.

Tie the rope to the support bar of the water manifold and hang the manifold.

Connect a pipe to the boss and place the end inside the pipe.

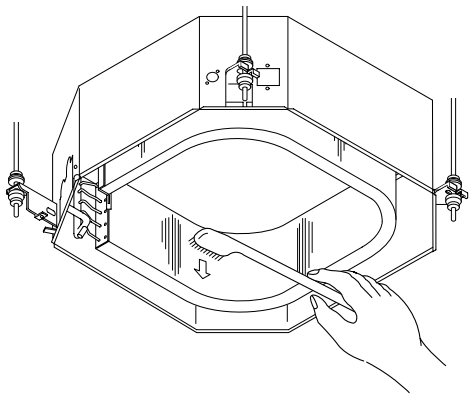

Pour approximately 15 litres of cleaning product for the aluminium fins into a supply tank.

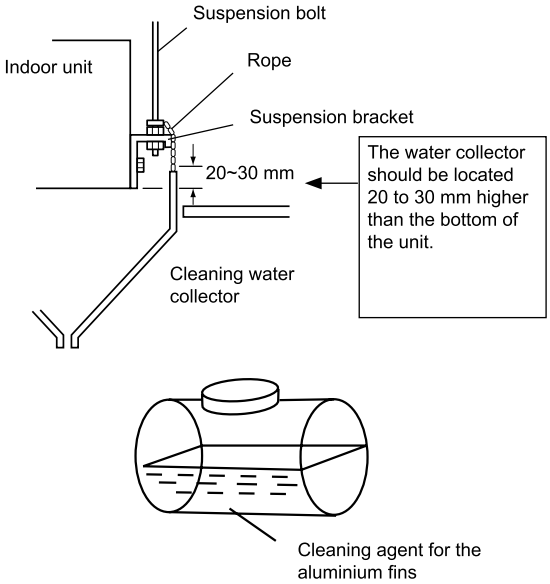

NOTE

1 ***Set the pressure of the water pump so as not to damage the funs.***

2 ***Any cleaning water left behind will rust the fins. Set the pump pressure to between 2.5 and 5 kg/cm^3 to protect the fins.***

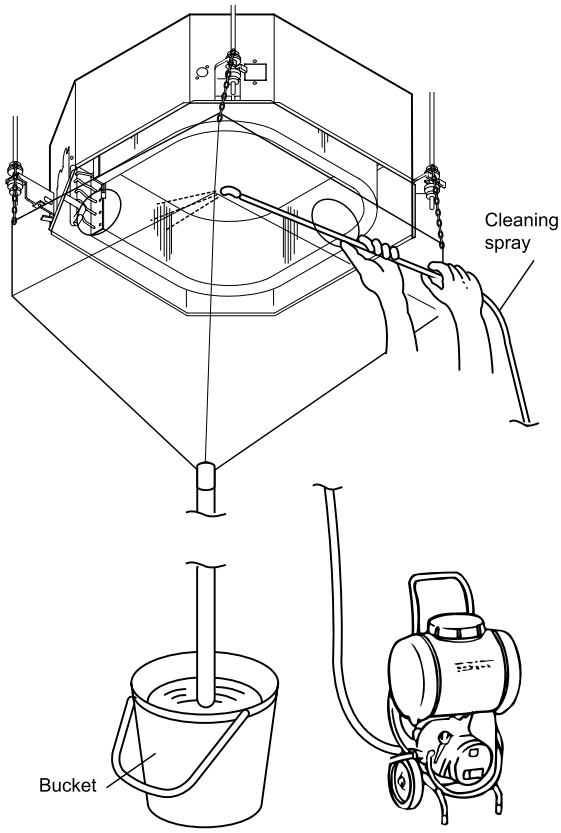

Insert the nozzle of the pressurised water gun into the hole in the cleaning water manifold. Start the water pump and clean the heat exchanger of any dust.

After cleaning, spray and remove all remains of water.

1 After cleaning, fit the drain pan by lowering the rope.
2 Dry the remains of any water on the indoor unit.
3 Check the insulation of the drain pump using a megohmmeter. Check that the insulation is above 1 MΩ when 500 V are applied.
4 Connect the wiring.
5 Perform the neutralisation treatment after cleaning.

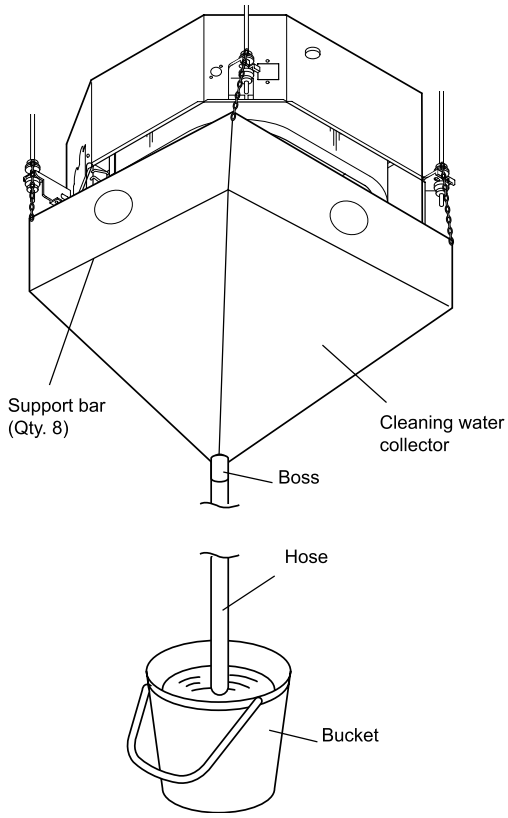

◆ Cleaning the built-in 2-way indoor unit (RCD)

Preliminary procedure.

Place a vinyl sheet on the floor to protect the furniture and other items from the cleaning water before starting this job.

Remove the drain pan as indicated in section *Removal of the drain pan, see on page 312*. Also carry out the following tasks:

1. Remove the drain pan after emptying it of water.
2. Empty the drain pan of water by removing the rubber plug. Make sure the water flows easily through the hole by inserting a pencil into it.
3. Once the drain pan has been removed, check that there is no water in the drainage at the bottom of the pan.
4. Clean and dry the pan before removing it. Handle the pan carefully.

Remove the electrical box after opening the corresponding panel and then disconnect the connectors located between the indoor and outdoor units and other connectors, as indicated in section *Removal of the electrical box, see on page 309*.

Remove the float switch as indicated in section*Removal of the float switch, see on page 311*.

Remove the drainage mechanism as indicated in section *Removal of the drain mechanism, see on page 312*.

Cleaning the indoor unit

Clean the dust from the inner surface of the heat exchanger by brushing it downwards. Collect all of the dust in a bucket or a cardboard box.

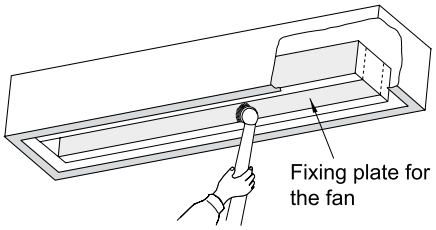

NOTE

Wear gloves to avoid injuries caused by the heat exchanger fins.

Place a vinyl sheet around the heat exchanger to prevent the cleaning water from splashing the insulation surface and drain pump. Secure the vinyl sheet to the side plate of the exchanger using adhesive tape and seal the gap between the vinyl sheets in the same manner.

Secure the motor panel using adhesive tape.

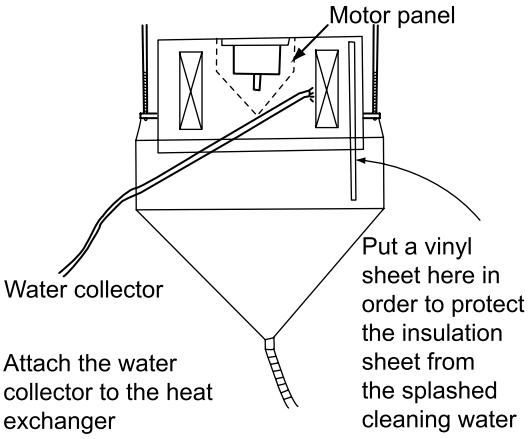

Hang the cleaning water manifold from the indoor unit.

1. Tie the rope to the suspension bolts of the indoor unit and drop downwards.
2. Insert the support bars into the holes in the water manifold.
3. Tie the rope to the support bar of the water manifold and hang the manifold.
4. Connect a pipe to the boss and place the end inside the pipe.

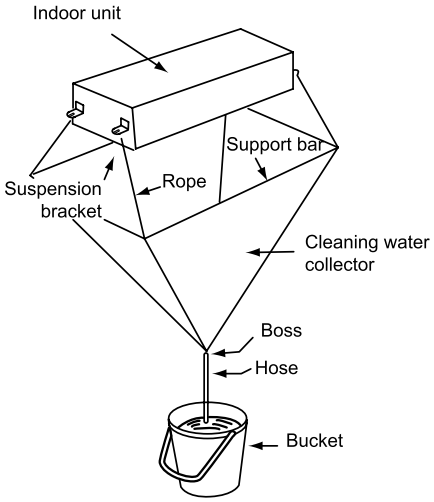

Pour approximately 15 litres of cleaning product for the aluminium fins into a supply tank.

Insert the nozzle of the pressurised water gun into the hole in the cleaning water manifold. Start the water pump and clean the heat exchanger of any dust.

After cleaning, spray and remove all remains of water.

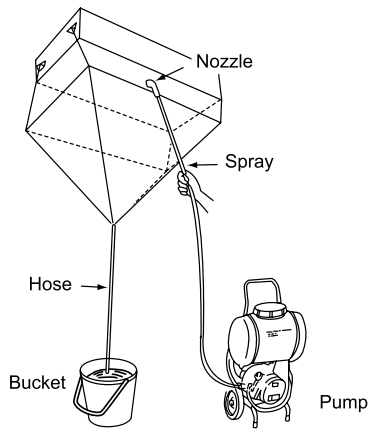

NOTE

1 ***Set the pressure of the water pump so as not to damage the funs.***

2 ***Any cleaning water left behind will rust the fins. Set the pump pressure to between 2.5 and 5 kg/cm^3 to protect the fins.***

After cleaning, fit the drain pan by lowering the rope.

Dry the remains of any water on the indoor unit.

Check the insulation of the drain pump using a megohmmeter. Check that the insulation is above 1 MΩ when 500 V are applied.

Connect the wiring.

Perform the neutralisation treatment after cleaning.

◆ Cleaning of the wall-type indoor unit (RPK)

Preliminary procedure.

Place a vinyl sheet on the floor to protect the furniture and other items from the cleaning water before starting this job.

Remove each part as indicated in the "Wall type" section.

Remove the front panel as indicated in section *Removal of the front panel, see on page 341*.

Remove the electrical box after opening the corresponding panel and then disconnect the connectors located between the indoor and outdoor units and other connectors, as indicated in section *Remove the electrical box panel, see on page 346*.

Remove the drain pan. Also carry out the following tasks:

1 Remove the drain pan after emptying it of water.

2 Empty the drain pan of water by removing the rubber plug. Make sure the water flows easily through the hole by inserting a pencil into it.

3 Once the drain pan has been removed, check that there is no water in the drainage at the bottom of the pan.

4 Clean and dry the pan before removing it. Handle the pan carefully.

Remove the heat exchanger as indicated in sections *Removal of the heat exchanger, see on page 355* and *Removal of the fan motor, see on page 359*.

Cleaning the indoor unit

NOTE

Wear gloves to avoid injuries caused by the heat exchanger fins.

Clean the inner surface of dust. Collect all of the dust in a bucket or a cardboard box.

Place a vinyl sheet around the electrical components to protect them from splashed cleaning water.

Secure the motor panel using adhesive tape.

Hang the cleaning water manifold from the indoor unit.

1 Tie the rope to the suspension bolts of the indoor unit and drop downwards.
2 Insert the support bars into the holes in the water manifold.
3 Tie the rope to the support bar of the water manifold and hang the manifold.
4 Connect a pipe to the boss and place the end inside the pipe.

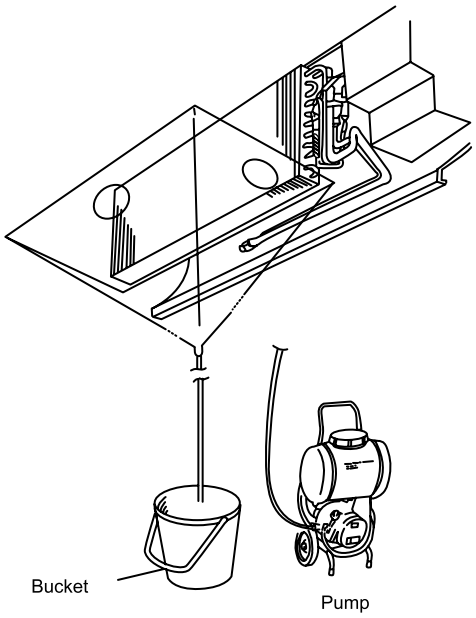

Pour approximately 15 litres of cleaning product for the aluminium fins into a supply tank.

Insert the nozzle of the pressurised water gun into the hole in the cleaning water manifold. Start the water pump and clean the heat exchanger of any dust.

After cleaning, spray and remove all remains of water.

NOTE

1 ***Set the pressure of the water pump so as not to damage the funs.***
2 ***Any cleaning water left behind will rust the fins. Set the pump pressure to between 2.5 and 5 kg/cm^3 to protect the fins.***

Dry the remains of any water on the indoor unit.

Check the insulation of the drain pump using a megohmmeter. Check that the insulation is above 1 MΩ when 500 V are applied.

Connect the wiring.

Perform the neutralisation treatment after cleaning.

After cleaning, fit the drain pan by lowering the rope.

Perform the neutralisation treatment after cleaning.

◆ Cleaning the floor console and floor concealed console indoor unit RPF(I)

Remove the front panel in line with the instructions given in chapter *Removal of the front panel, see on page 365*.

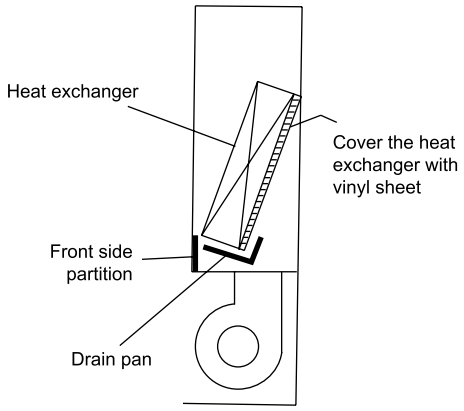

Remove any dust from the heat exchanger.

Remove the dust from the heat exchanger by brushing it in a downwards direction. Collect all of the dust in a bucket or a cardboard box.

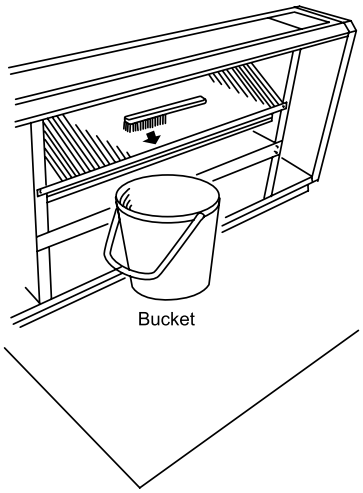

Disconnect the drain pipe from the piping.

Cover the rear of the heat exchanger with a sheet of vinyl after removing the front partition and the drain pan. After covering the rear, refit the front partition and the drain pan.

Lift the drain pipe and place the end in a bucket.

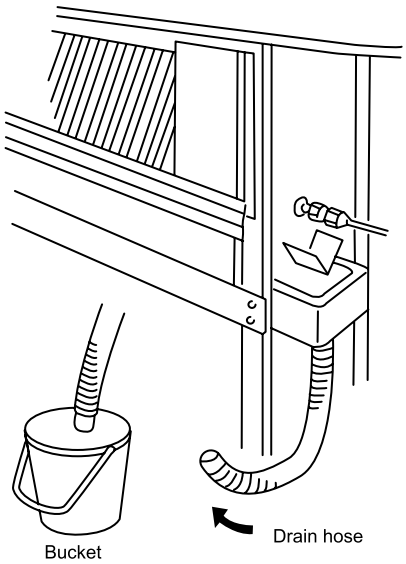

◆ Cleaning of the ceiling-type indoor unit (RPC)

Preliminary procedure.

Place a vinyl sheet on the floor to protect the furniture from the cleaning water before starting this job.

Remove the side panels in line with the instructions given in chapter *Removal of the side panel, see on page 317*.

Remove the louver in line with the instructions given in chapter *Removal of the air outlet grille, see on page 318*.

Open the air inlet grille as indicated in chapter *Removal of the air filter, see on page 317*.

Remove the lower panel and drain pan in line with the instructions given in chapter *Removal of the thermistors from the liquid and gas pipes, see on page 320*.

Remove the partition plate after removing the set screws.

Remove the fan securing cover after removing the two screws located on the left and right of the partition.

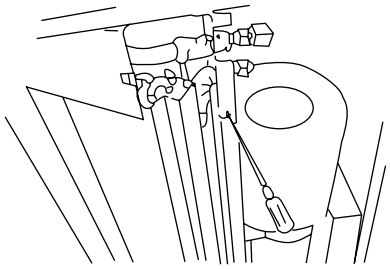

Fit the drain pan and the lower panel in the opposite order of the instructions.

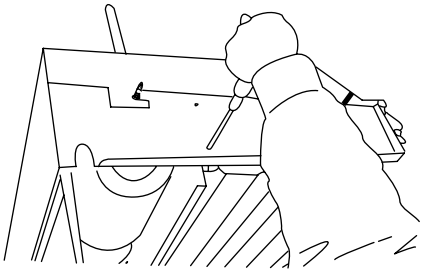

Cleaning the indoor unit

NOTE

Wear gloves to avoid injuries caused by the heat exchanger fins.

Place a vinyl sheet around the electrical components except the drain pan to protect them from splashed cleaning water.

Secure the motor panel using adhesive tape.

Clean the dust from the inner surface of the heat exchanger by brushing it downwards. Collect all of the dust in a bucket or a cardboard box.

Hang the cleaning water manifold from the indoor unit.

Insert the nozzle of the pressurised water gun into the hole in the cleaning water manifold. Start the water pump and clean the heat exchanger of any dust.

After cleaning, spray and remove all remains of water.

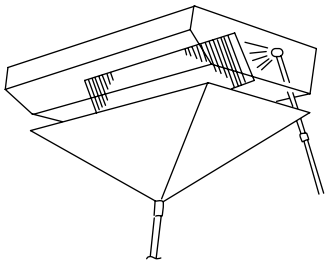

NOTE

1 ***Set the pressure of the water pump so as not to damage the funs.***

2 ***Any cleaning water left behind will rust the fins. Set the pump pressure to between 2.5 and 5 kg/cm^3 to protect the fins.***

After cleaning, fit the drain pan by lowering the rope.

Dry the remains of any water on the indoor unit.

Check the insulation of the drain pump using a megohmmeter. Check that the insulation is above 1 MΩ when 500 V are applied.

Perform the neutralisation treatment after cleaning.

12.1.3 Collection of refrigerant to replace the indoor unit

◆ Collection of refrigerant after replacing the indoor unit

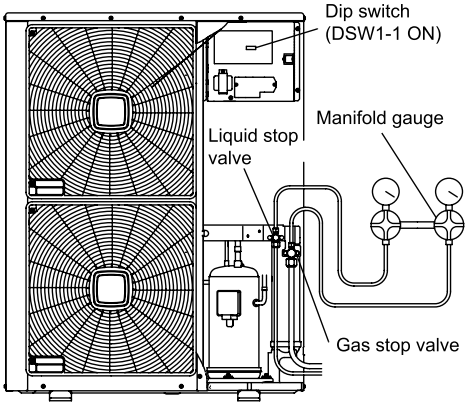

1 Connect the gauge manifold to the gas and liquid stop valve.
2 Switch the power supply ON.
3 Enable pin 1 of DSW1 on the outdoor unit PCB for cooling operation. Close the liquid stop valve and collect the refrigerant.
4 Carry out the following procedures immediately when the side pressure drops and the gas stop valve indicates –0.01 MPa.

NOTE

Prevent the pressure from dropping below –0.01 MPa. If the pressure is less, the compressor may be faulty.

a Close the gas stop valve.
b Disable pin 1 of DSW1.

5 Switch off the power supply.

HITACHI
Inspire the Next

Hitachi Air Conditioning Products Europe, S.A.
Ronda Shimizu, 1 - Polig. Ind. Can Torrella
08233 Vacarisses (Barcelona) Spain

Hitachi certifies that our products have met EU consumer safety, health and environmental requirements.

Hitachi Air Conditioning Products Europe, S.A. is certified with:
ISO 9001 of AENOR, Spain for its Quality Management accordance with the standard
ISO 14001 of AENOR Spain for its Environmental Management systems accordance with the standard

Hitachi air conditioning products are manufactured according to:
ISO 9001 of JQA, Japan for its Quality Management accordance with the standard
ISO 14001 of JACO, Japan for its Environmental Management accordance with the standard

Hitachi air conditioning products are manufactured according to:
ISO 9001 of Malaysia, for its Quality Management accordance with the standard
ISO 14001 of Malaysia, for its Environmental Management systems accordance with the standard

HITACHI participates in the Eurovent Certification Programme; the certified data of certified models are listed in the Eurovent Certification Online Directory (www.eurovent-certification.com).

SMGB0063 rev. 2 - 08/2011

Printed in Spain